**Operation Manual**

# *Model T300/T300M Carbon Monoxide Analyzer*

Also supports operation of:

## *Models T320 and T320U Analyzers*

(when used in conjunction with T320/320U Addendum, PN07406)

© TELEDYNE API (TAPI)
9970 Carroll Canyon Road
SAN DIEGO, CA 92121-5201
USA

Toll-free Phone: 800-324-5190
Phone: +1 858-657-9800
Fax: +1 858-657-9816
Email: api-sales@teledyne.com
Website: http://www.teledyne-api.com/

Copyright 2010-2012
Teledyne API

06864B DCN6314
14 February 2012

# ABOUT TELEDYNE API (TAPI)

Teledyne API (TAPI), a business unit of Teledyne Instruments, Inc., is a worldwide market leader in the design and manufacture of precision analytical instrumentation used for air quality monitoring, continuous emissions monitoring, and specialty process monitoring applications. Founded in San Diego, California, in 1988, TAPI introduced a complete line of Air Quality Monitoring (AQM) instrumentation, which comply with the United States Environmental Protection Administration (EPA) and international requirements for the measurement of criteria pollutants, including CO, SO2, NOX and Ozone.

Since 1988 TAPI has combined state-of-the-art technology, proven measuring principles, stringent quality assurance systems and world class after-sales support to deliver the best products and customer satisfaction in the business.

For further information on our company, our complete range of products, and the applications that they serve , please visit www.teledyne-api.com or contact sales@teledyne-api.com.


### NOTICE OF COPYRIGHT

© 2010-2012 Teledyne API, Inc. All rights reserved.


### TRADEMARKS

All trademarks, registered trademarks, brand names or product names appearing in this document are the property of their respective owners and are used herein for identification purposes only.

This page intentionally left blank.

# IMPORTANT SAFETY INFORMATION

Important safety messages are provided throughout this manual. Please read these messages carefully.

A safety message alerts you to potential hazards that could hurt you or others. Each safety message is associated with a safety alert symbol. These symbols are found in the manual and inside the instrument. The definition of these symbols is described below:

WARNING: Electrical Shock Hazard

HAZARD: Strong oxidizer

GENERAL WARNING/CAUTION: Read the accompanying message for specific information.

CAUTION: Hot Surface Warning

Technician Symbol: All operations marked with this symbol are to be performed by qualified maintenance personnel only.

DO NOT TOUCH: Touching some parts of the instrument without protection or proper tools could result in damage to the part(s) and/or the instrument.

Electrical Ground: This symbol inside the instrument marks the central safety grounding point for the instrument.

**CAUTION - General Safety Hazard**

**This instrument should only be used for the purpose and in the manner described in this manual. If you use this instrument in a manner other than that for which it was intended, unpredictable behavior could ensue with possible hazardous consequences.**

**NEVER use any gas analyzer to sample combustible gas(es).**

**Note**

**Technical Assistance regarding the use and maintenance of the T300/T300M or any other Teledyne API product can be obtained by contacting Teledyne API's Customer Service Department:**

**Phone: 800-324-5190**

**Email: api-customerservice@teledyne.com**

**or by accessing various service options on our website at 7http://www.teledyne-api.com/.**

# CONSIGNES DE SÉCURITÉ

Des consignes de sécurité importantes sont fournies tout au long du présent manuel dans le but d'éviter des blessures corporelles ou d'endommager les instruments. Veuillez lire attentivement ces consignes. Chaque consigne de sécurité est représentée par un pictogramme d'alerte de sécurité; ces pictogrammes se retrouvent dans ce manuel et à l'intérieur des instruments. Les symboles correspondent aux consignes suivantes :

**AVERTISSEMENT** : Risque de choc électrique

**DANGER** : Oxydant puissant

**AVERTISSEMENT GÉNÉRAL / MISE EN GARDE** : Lire la consigne complémentaire pour des renseignements spécifiques

**MISE EN GARDE** : Surface chaude

**Ne pas toucher** : Toucher à certaines parties de l'instrument sans protection ou sans les outils appropriés pourrait entraîner des dommages aux pièces ou à l'instrument.

**Pictogramme « technicien »** : Toutes les opérations portant ce symbole doivent être effectuées uniquement par du personnel de maintenance qualifié.

**Mise à la terre** : Ce symbole à l'intérieur de l'instrument détermine le point central de la mise à la terre sécuritaire de l'instrument.

**MISE EN GARDE**

**Cet instrument doit être utilisé aux fins décrites et de la manière décrite dans ce manuel. Si vous utilisez cet instrument d'une autre manière que celle pour laquelle il a été prévu, l'instrument pourrait se comporter de façon imprévisible et entraîner des conséquences dangereuses.**

**NE JAMAIS utiliser un analyseur de gaz pour échantillonner des gaz combustibles!**

# WARRANTY

### WARRANTY POLICY (02024D)

Teledyne API (TAPI), a business unit of Teledyne Instruments, Inc., warrants its products as follows:

Prior to shipment, TAPI equipment is thoroughly inspected and tested. Should equipment failure occur, TAPI assures its customers that prompt service and support will be available.

### COVERAGE

After the warranty period and throughout the equipment lifetime, TAPI stands ready to provide on-site or in-plant service at reasonable rates similar to those of other manufacturers in the industry. All maintenance and the first level of field troubleshooting are to be performed by the customer.

### NON-TAPI MANUFACTURED EQUIPMENT

Equipment provided but not manufactured by TAPI is warranted and will be repaired to the extent and according to the current terms and conditions of the respective equipment manufacturer's warranty.

### GENERAL

During the warranty period, TAPI warrants each Product manufactured by TAPI to be free from defects in material and workmanship under normal use and service. Expendable parts are excluded.

If a Product fails to conform to its specifications within the warranty period, TAPI shall correct such defect by, in TAPI's discretion, repairing or replacing such defective Product or refunding the purchase price of such Product.

The warranties set forth in this section shall be of no force or effect with respect to any Product: (i) that has been altered or subjected to misuse, negligence or accident, or (ii) that has been used in any manner other than in accordance with the instruction provided by TAPI, or (iii) not properly maintained.

THE WARRANTIES SET FORTH IN THIS SECTION AND THE REMEDIES THEREFORE ARE EXCLUSIVE AND IN LIEU OF ANY IMPLIED WARRANTIES OF MERCHANTABILITY, FITNESS FOR PARTICULAR PURPOSE OR OTHER WARRANTY OF QUALITY, WHETHER EXPRESSED OR IMPLIED. THE REMEDIES SET FORTH IN THIS SECTION ARE THE EXCLUSIVE REMEDIES FOR BREACH OF ANY WARRANTY CONTAINED HEREIN. API SHALL NOT BE LIABLE FOR ANY INCIDENTAL OR CONSEQUENTIAL DAMAGES ARISING OUT OF OR RELATED TO THIS AGREEMENT OF TAPI'S PERFORMANCE HEREUNDER, WHETHER FOR BREACH OF WARRANTY OR OTHERWISE.

### TERMS AND CONDITIONS

All units or components returned to Teledyne API should be properly packed for handling and returned freight prepaid to the nearest designated Service Center. After the repair, the equipment will be returned, freight prepaid.

**ATTENTION**

**AVOID WARRANTY INVALIDATION**

**Failure to comply with proper anti-Electro-Static Discharge (ESD) handling and packing instructions and Return Merchandise Authorization (RMA) procedures when returning parts for repair or calibration may void your warranty. For anti-ESD handling and packing instructions please refer to "Packing Components for Return to Teledyne API's Customer Service" in the Primer on Electro-Static Discharge section of this manual, and for RMA procedures please refer to our Website at http://www.teledyne-api.com under Customer Support > Return Authorization.**

This page intentionally left blank.

# ABOUT THIS MANUAL

Presented here is information regarding the documents that are included with this manual (Structure), its history of release and revisions (Revision History), how the content is organized (Organization), a description of other information related to this manual (Related Information), and the conventions used to present the information in this manual (Conventions Used).

### STRUCTURE

This T300 manual, PN 06864, is comprised of multiple documents, assembled in PDF format, as listed below.

| Part No. | Rev | Name/Description |
|---|---|---|
| 06864 | B | Operation Manual, T300 Carbon Monoxide Analyzer |
| 04906 | H | Appendix A, Menu Trees and related software documentation |
| 06849 | A | Spare Parts List (in Appendix B of this manual) |
| 04301 | E | Recommended Spares Stocking Levels List/T300 (in Appendix B of this manual) |
| 04834 | G | Recommended Spares Stocking Levels List/T300M (in Appendix B of this manual) |
| 04305 | G | Appendix C, Repair Form |
| 06912 | B | Interconnect Diagram (in Appendix D of this manual) |
| 069120100 | B | Interconnect Table (in Appendix D of this manual) |
| | | Schematics (in Appendix Dof this manual) |
| 03297 | K | PCA, 03296, IR Photodetector Preamp and Sync Demodulator |
| 03632 | A | PCA, 03631, 0-20mA driver |
| 04354 | D | PCA, 04003, Pressure/Flow Transducer Interface |
| 05033 | A | PCA, 05032, Opto-Interrupter |
| 04136 | B | PCA, 04135, Relay Board |
| 04468 | B | PCA, 04467, Analog Output Isolator |
| 05803 | B | SCH, PCA 05802, MOTHERBOARD, GEN-5 |
| 06698 | D | SCH, PCA 06670, INTRFC, LCD TCH SCRN, |
| 06882 | B | SCH, LVDS TRANSMITTER BOARD |
| 06731 | B | SCH, AUX-I/O BOARD |

**Note** **We recommend that this manual be read in its entirety before any attempt is made to operate the instrument.**

### ORGANIZATION

This manual is divided among three main parts and a collection of appendices at the end.

**Part I** contains introductory information that includes an overview of the analyzer, descriptions of the available options, specifications, installation and connection instructions, and the initial calibration and functional checks. The last two sections contain Frequently Asked Questions (FAQs) followed by a glossary, and a description of available options.

**Part II** comprises the operating instructions, which include basic, advanced and remote operation, calibration, diagnostics, testing, validating and verifying, and ends with specifics of calibrating for use in EPA monitoring.

**Part III** provides detailed technical information, such as theory of operation, maintenance, and troubleshooting and repair. It also contains a section that provides important information about electro-static discharge and avoiding its consequences.

The appendices at the end of this manual provide support information such as, version-specific software documentation, lists of spare parts and recommended stocking levels, and schematics.

### CONVENTIONS USED

In addition to the safety symbols as presented in the *Important Safety Information* page, this manual provides *special notices* related to the safety and effective use of the analyzer and other pertinent information.

**Special Notices** appear as follows:

**ATTENTION**

**COULD DAMAGE INSTRUMENT AND VOID WARRANTY**

**This special notice provides information to avoid damage to your instrument and possibly invalidate the warranty.**

**IMPORTANT**

**IMPACT ON READINGS OR DATA**

**Could either affect accuracy of instrument readings or cause loss of data.**

**Note**

**Pertinent information associated with the proper care, operation or maintenance of the analyzer or its parts.**

# REVISION HISTORY

This section provides information regarding changes to this manual.

**2012, February 14, T300/300M Manual, PN06864 Rev B**

| Document | PN | Rev | DCN | Change Summary |
|---|---|---|---|---|
| Top Assy Manual | 06864 | B | 6314 | **Administrative changes: restructure to new T-Series format**:<br>• Consolidated Options sections and restructured into tabular format; moved to Section 1.<br>• Corrected Safety Compliance (was: IEC 61010-1:90 + A1:92 + A2:95; is: IEC 61010-1:2001).<br>• Added North American Certification statement.<br>• Section 2.1 – added 2nd gas sensor options specs.<br>• Replaced Fig 3-5 with correct internal layout illustration (was short box; is long box).<br>• Move pneumatic illustrations from Options section to pneumatic setup section.<br>• Gathered communications setup and operation into one group (Section 6).<br>• Renamed Part III from “Technical Information” to “Maintenance and Service”.<br>• Renamed “Troubleshooting and Repair” to “Troubleshooting and Service”.<br>• Renamed section “Theory of Operation” to “Principles of Operation”.<br>• Moved “Principles of Operation” section after “Maintenance” and “Troubleshooting and Service” sections.<br>• Moved FAQs to end of Troubleshooting/Service section<br>• Moved Glossary to end of manual before Index.<br>**Technical changes:**<br>• Status Outputs: added connection line for +5V to external device (Fig 3-11) and corrected DC Power pin description (Table 3-6, deleted “combined rating w/Control Output if used”).<br>• Section 3.3.1.8: modify Multidrop connection section to clarify insructions and add detail.<br>• Correct COM1 default baud rate value to 115,200 (was: 19,200)<br>• Added USB driver download instructions (Section 6.6)<br>• Replaced Appendix D Wiring List Rev A with Rev B.<br>• Replaced Appendix D Wiring Diagram Rev A with Rev B.<br>• Swapped Appendix D Prss/Flow Transducer was 04003 (assembly dwg) is 04354 (elec. schematic).<br>• Replaced Appendix D Schematic 06731 Rev A with Rev B. |

**2010, September 14, T300 Manual, PN06864 Rev** Error! Unknown document property name.**, DCN6314 Initial Release**

This page intentionally left blank.

# TABLE OF CONTENTS


**PART I GENERAL INFORMATION ..... 23**
**1. INTRODUCTION, FEATURES AND OPTIONS ..... 25**
1.1. T300 Family Overview ..... 25
1.2. Features ..... 26
1.3. T300/T300M Documentation ..... 26
1.4. Options ..... 27
**2. SPECIFICATIONS AND APPROVALS ..... 31**
2.1. Specifications ..... 31
2.2. EPA Equivalency Designation ..... 33
2.3. Approvals and Certifications ..... 34
2.3.1. Safety ..... 34
2.3.2. EmC ..... 34
2.3.3. Other Type Certifications ..... 34
**3. GETTING STARTED ..... 35**
3.1. Unpacking the T300/T300M Analyzer ..... 35
3.1.1. Ventilation Clearance ..... 36
3.2. Instrument Layout ..... 37
3.2.1. Front Panel ..... 37
3.2.2. Rear panel ..... 41
3.2.3. T300/T300M Analyzer Layout ..... 43
3.3. Connections and Setup ..... 46
3.3.1. Electrical Connections ..... 46
3.3.1.1. Connecting Power ..... 46
3.3.1.2. Connecting Analog Inputs (Option) ..... 47
3.3.1.3. Connecting Analog Outputs ..... 47
3.3.1.4. Current Loop Analog Outputs (Option 41) Setup ..... 48
3.3.1.5. Connecting the Status Outputs ..... 50
3.3.1.6. Connecting the Control Inputs ..... 51
3.3.1.7. Connecting the Concentration Alarm Relay (Option 61) ..... 53
3.3.1.8. Connecting the Communication Interfaces ..... 54
3.3.2. Pneumatic Connections ..... 61
3.3.2.1. Pneumatic Connections for Basic Configuration ..... 63
3.3.2.2. Pneumatic Layout for Basic configuration ..... 65
3.3.2.3. Pneumatic Connections for Ambient Zero/Ambient Span Valve Option ..... 65
3.3.2.4. Pneumatic Layout for Ambient Zero/Ambient Span Valve Option ..... 67
3.3.2.5. Pneumatic Connections for Ambient Zero/Pressurized Span ..... 67
3.3.2.6. Pneumatic Layout for Ambient Zero/Pressurized Span Option ..... 69
3.3.2.7. Pneumatic Connections for Zero Scrubber/Pressurized Span Option ..... 70
3.3.2.8. Pneumatic Layout for Zero Scrubber/Pressurized Span Option ..... 71
3.3.2.9. Pneumatic Connections for Zero Scrubber/Ambient Span Option ..... 72
3.3.2.10. Pneumatic Layout for Zero scrubber/ Ambient Span OPTion ..... 74
3.3.2.11. Calibration Gases ..... 74
3.4. Startup, Functional Checks, and Initial Calibration ..... 76
3.4.1. Startup ..... 76
3.4.2. Warning Messages ..... 76
3.4.3. Functional Checks ..... 78
3.4.4. Initial Calibration ..... 79
3.4.4.1. Interferents for CO Measurements ..... 80
3.4.4.2. Initial Calibration Procedure ..... 80
3.4.4.3. O2 Sensor Calibration Procedure ..... 85
3.4.4.4. CO2 Sensor Calibration Procedure ..... 85

**PART II OPERATING INSTRUCTIONS ..... 87**
**4. OVERVIEW OF OPERATING MODES ..... 89**
4.1. Sample Mode ..... 90
4.1.1. Test Functions ..... 90
4.1.2. Warning Messages ..... 93
4.2. Calibration Mode ..... 94
4.3. Setup MODE ..... 95
4.3.1. Password Security ..... 95
4.3.2. Primary Setup Menu ..... 95
4.3.3. The areas accessible under the Setup mode are shown in Table 4-4 and Secondary Setup Menu (SETUP>MORE) ..... 95
4.3.4. Secondary Setup Menu (SETUP>MORE) ..... 96
**5. SETUP MENU 97**
5.1. SETUP → CFG: Configuration Information ..... 97
5.2. SETUP → ACAL: Automatic Calibration ..... 98
5.3. SETUP →DAS: Internal Data Acquisition System ..... 98
5.4. SETUP → RNGE: Analog Output Reporting Range Configuration ..... 98
5.4.1. Analog Output Ranges for CO Concentration ..... 98
5.4.2. Physical Range vs Analog Output Reporting Ranges ..... 100
5.4.3. Reporting Range Modes: Single, Dual, Auto Ranges ..... 100
5.4.3.1. SINGLE Range Mode (SNGL) ..... 102
5.4.3.2. DUAL Range Mode (DUAL) ..... 103
5.4.3.3. AUTO Range Mode (AUTO) ..... 105
5.4.4. Range Units ..... 107
5.4.5. Dilution Ratio (Option) ..... 108
5.5. SETUP → PASS: Password Protection ..... 109
5.6. SETUP → CLK: Setting the Internal Time-of-Day Clock and Adjusting Speed ..... 111
5.6.1.1. Setting the Internal Clock's Time and Day ..... 111
5.6.1.2. Adjusting the Internal Clock's Speed ..... 111
5.7. SETUP →Comm: Communications Ports ..... 113
5.7.1. ID (Machine Identification) ..... 113
5.7.2. INET (Ethernet) ..... 113
5.7.3. COM1 and COM2 (Mode, Baud Rate and Test Port) ..... 113
5.8. SETUP →VARS: Variables Setup and Definition ..... 114
5.9. SETUP →Diag: Diagnostics Functions ..... 116
5.9.1. Signal I/O ..... 118
5.9.2. Analog Output ..... 119
5.9.3. Analog I/O Configuration ..... 120
5.9.3.1. Analog Output Voltage / Current Range Selection ..... 122
5.9.3.2. Analog Output Calibration ..... 124
5.9.3.3. Enabling or Disabling the AutoCal for an Individual Analog Output ..... 124
5.9.3.4. Automatic Calibration of the Analog Outputs ..... 126
5.9.3.5. Individual Calibration of the Analog Outputs ..... 127
5.9.3.6. Manual Calibration of the Analog Outputs Configured for Voltage Ranges ..... 128
5.9.3.7. Manual Adjustment of Current Loop Output Span and Offset ..... 130
5.9.3.8. Turning an Analog Output Over-Range Feature ON/OFF ..... 133
5.9.3.9. Adding a Recorder Offset to an Analog Output ..... 134
5.9.3.10. AIN Calibration ..... 135
5.9.3.11. Analog Inputs (XIN1…XIN8) Option Configuration ..... 136
5.9.4. Electrical Test ..... 137
5.9.5. Dark Calibration ..... 137
5.9.6. Pressure Calibration ..... 137
5.9.7. Flow Calibration ..... 138
5.9.8. Test Chan Output ..... 138
5.9.8.1. Selecting a Test Channel Function for Output A4 ..... 138

5.10. SETUP →MORE → ALRM (Option): Using the Gas Concentration Alarms ..... 140
5.10.1. Setting the T300 Concentration Alarm Limits ..... 141
**6. COMMUNICATIONS SETUP AND OPERATION ..... 143**
6.1. Data Terminal/Communication Equipment (DTE DCE) ..... 143
6.2. Communication Modes, Baud Rate and Port Testing ..... 143
6.2.1. Communication Modes ..... 144
6.2.2. COM Port Baud Rate ..... 146
6.2.3. Com Port Testing ..... 147
6.3. RS-232 ..... 147
6.4. RS-485 (Option) ..... 148
6.5. Ethernet ..... 148
6.5.1. Configuring Ethernet Communication Manually (Static IP Address) ..... 149
6.5.2. Configuring Ethernet Communication Using Dynamic Host Configuration Protocol (DHCP) ..... 151
6.5.3. Changing the Analyzer's HOSTNAME ..... 152
6.6. USB Port (Option) for Remote Access ..... 153
6.7. Communications Protocols ..... 155
6.7.1. MODBUS ..... 155
6.7.2. Hessen ..... 156
6.7.2.1. Hessen COMM Port Configuration ..... 157
6.7.2.2. Activating Hessen Protocol ..... 159
6.7.2.3. Selecting a Hessen Protocol Type ..... 160
6.7.2.4. Setting The Hessen Protocol Response Mode ..... 161
6.7.3. Hessen Protocol Gas List Entries ..... 162
6.7.3.1. Hessen Protocol Gas ID ..... 162
6.7.3.2. Editing or Adding HESSEN Gas List Entries ..... 163
6.7.3.3. Deleting HESSEN Gas List Entries ..... 164
6.7.3.4. Setting Hessen Protocol Status Flags ..... 165
6.7.3.5. Instrument ID ..... 166
**7. DATA ACQUISITION SYSTEM (DAS) AND APICOM ..... 167**
7.1. DAS Structure ..... 168
7.1.1. DAS Data Channels ..... 169
7.1.2. Default DAS Channels ..... 169
7.1.3. Viewing DAS Channels and Individual Records ..... 172
7.1.4. Editing DAS Channels ..... 173
7.1.4.1. Editing DAS Data Channel Names ..... 174
7.1.5. Editing DAS Triggering Events ..... 175
7.1.6. Editing DAS Parameters ..... 176
7.1.7. Sample Period and Report Period ..... 178
7.1.8. Number of Records ..... 181
7.1.9. RS-232 Report Function ..... 183
7.1.9.1. The Compact Report Feature ..... 183
7.1.9.2. The Starting Date Feature ..... 184
7.1.10. Disabling/Enabling Data Channels ..... 184
7.1.11. HOLDOFF Feature ..... 185
7.2. Remote DAS Configuration ..... 186
7.2.1. DAS Configuration via APICOM ..... 186
7.2.2. DAS Configuration Using Terminal Emulation Programs ..... 188
**8. REMOTE OPERATION ..... 189**
8.1. Computer Mode ..... 189
8.1.1. Remote Control via APICOM ..... 189
8.2. Interactive Mode ..... 190
8.2.1. Remote Control via a Terminal Emulation Program ..... 190
8.2.1.1. Help Commands in Interactive Mode ..... 190
8.2.1.2. Command Syntax ..... 190
8.2.1.3. Data Types ..... 191

8.2.1.4. Status Reporting ..... 192
8.2.1.5. General Message Format ..... 192
8.3. Remote Access by Modem ..... 192
8.4. Password Security for Serial Remote Communications ..... 195
**9. CALIBRATION PROCEDURES ..... 197**
9.1. Calibration Preparations ..... 197
9.1.1. Required Equipment, Supplies, and Expendables ..... 197
9.1.1.1. Zero Air ..... 198
9.1.1.2. Span Gas ..... 198
9.1.1.3. Calibration Gas Standards and Traceability ..... 198
9.1.2. Data Recording Devices ..... 199
9.2. Manual Calibration ..... 199
9.2.1. Setup for Basic Calibration Checks and Calibration ..... 200
9.2.2. Performing a Basic Manual Calibration Check ..... 201
9.2.3. Performing a Basic Manual Calibration ..... 202
9.2.3.1. Setting the Expected Span Gas Concentration ..... 202
9.2.3.2. Zero/Span Point Calibration Procedure ..... 204
9.3. Manual Calibration with Zero/Span Valves ..... 205
9.3.1. Setup for Calibration Using Valve Options ..... 205
9.3.2. Manual Calibration Checks with Valve Options Installed ..... 208
9.3.3. Manual Calibration Using Valve Options ..... 209
9.3.3.1. Setting the Expected Span Gas Concentration ..... 209
9.3.3.2. Zero/Span Point Calibration Procedure ..... 210
9.3.3.3. Use of Zero/Span Valve with Remote Contact Closure ..... 212
9.4. Automatic Zero/Span Cal/Check (AutoCal) ..... 212
9.4.1. SETUP → ACAL: Programming and AUTO CAL Sequence ..... 215
9.4.1.1. AutoCal with Auto or Dual Reporting Ranges Modes Selected ..... 217
9.5. CO Calibration Quality ..... 218
9.6. Calibration of the T300/T300M's Electronic Subsystems ..... 219
9.6.1. Dark Calibration Test ..... 219
9.6.2. Pressure Calibration ..... 220
9.6.3. Flow Calibration ..... 222
9.7. Calibration of Optional Sensors ..... 223
9.7.1. $O_2$ Sensor Calibration ..... 223
9.7.1.1. O2 Pneumatics Connections ..... 223
9.7.1.2. Set O2 Span Gas Concentration ..... 224
9.7.1.3. Activate O2 Sensor Stability Function ..... 225
9.7.1.4. O2 ZERO/SPAN CALIBRATION ..... 226
9.7.2. $CO_2$ Sensor Calibration Procedure ..... 227
9.7.2.1. CO2 Pneumatics Connections ..... 227
9.7.2.2. Set CO2 Span Gas Concentration: ..... 228
9.7.2.3. Activate CO2 Sensor Stability Function ..... 229
9.7.2.4. CO2 Zero/Span Calibration ..... 230
**10. EPA CALIBRATION PROTOCOL ..... 231**
10.1. Calibration Requirements ..... 231
10.1.1. Calibration of Equipment - General Guidelines ..... 231
10.1.2. Calibration Equipment, Supplies, and Expendables ..... 232
10.1.2.1. Data Recording Device ..... 232
10.1.2.2. Spare Parts and Expendable Supplies ..... 232
10.1.3. Recommended Standards for Establishing Traceability ..... 233
10.1.4. Calibration Frequency ..... 234
10.1.5. Level 1 Calibrations versus Level 2 Checks ..... 234
10.2. ZERO and SPAN Checks ..... 235
10.2.1. Zero/Span Check Procedures ..... 236
10.2.2. Precision Check ..... 236

10.3. Precisions Calibration ..... 237
10.3.1. Precision Calibration Procedures ..... 237
10.4. Auditing Procedure ..... 237
10.4.1. Calibration Audit ..... 237
10.4.2. Data Reduction Audit ..... 238
10.4.3. System Audit/Validation ..... 238
10.5. Dynamic Multipoint Calibration Procedure ..... 238
10.5.1. Linearity test ..... 238
10.6. References ..... 240
**PART III TECHNICAL INFORMATION ..... 241**
**11. MAINTENANCE SCHEDULE & PROCEDURES ..... 245**
11.1. Maintenance Schedule ..... 245
11.2. Predicting Failures Using the Test Functions ..... 249
11.3. Maintenance Procedures ..... 250
11.3.1. Replacing the Sample Particulate Filter ..... 250
11.3.2. Rebuilding the Sample Pump ..... 251
11.3.3. Performing Leak Checks ..... 251
11.3.3.1. Vacuum Leak Check and Pump Check ..... 251
11.3.3.2. Pressure Leak Check ..... 251
11.3.4. Performing a Sample Flow Check ..... 252
11.3.5. Cleaning the Optical Bench ..... 252
11.3.6. Cleaning Exterior Surfaces of the T300/T300M ..... 252
**12. TROUBLESHOOTING AND SERVICE ..... 253**
12.1. General Troubleshooting ..... 253
12.1.1. Fault Diagnosis with WARNING Messages ..... 254
12.1.2. Fault Diagnosis with TEST Functions ..... 258
12.1.3. the Diagnostic Signal I/O Function ..... 261
12.1.4. Status LEDs ..... 263
12.1.4.1. Motherboard Status Indicator (Watchdog) ..... 263
12.1.4.2. Sync Demodulator Status LEDs ..... 264
12.1.4.3. Relay Board Status LEDs ..... 265
12.2. Gas Flow Problems ..... 267
12.2.1. T300/T300M Internal Gas Flow Diagrams ..... 268
12.2.2. Typical Sample Gas Flow Problems ..... 271
12.2.2.1. Flow is Zero ..... 271
12.2.2.2. Low Flow ..... 272
12.2.2.3. High Flow ..... 272
12.2.2.4. Displayed Flow = “Warnings” ..... 273
12.2.2.5. Actual Flow Does Not Match Displayed Flow ..... 273
12.2.2.6. Sample Pump ..... 273
12.3. Calibration Problems ..... 273
12.3.1. Miscalibrated ..... 273
12.3.2. Non-Repeatable Zero and Span ..... 274
12.3.3. Inability to Span – No SPAN Button (CALS) ..... 274
12.3.4. Inability to Zero – No ZERO Button (CALZ) ..... 274
12.4. Other Performance Problems ..... 275
12.4.1. Temperature Problems ..... 275
12.4.1.1. Box or Sample Temperature ..... 275
12.4.1.2. Bench Temperature ..... 275
12.4.1.3. GFC Wheel Temperature ..... 276
12.4.1.4. IR Photo-Detector TEC Temperature ..... 277
12.4.2. Excessive Noise ..... 277
12.5. Subsystem Checkout ..... 278
12.5.1. AC Mains Configuration ..... 278
12.5.2. DC Power Supply ..... 279

12.5.3. $I^2C$ Bus ....279
12.5.4. Touchscreen Interface ....280
12.5.5. LCD Display Module ....280
12.5.6. Relay Board ....280
12.5.7. Sensor Assembly ....281
12.5.7.1. Sync/Demodulator Assembly ....281
12.5.7.2. Electrical Test ....281
12.5.7.3. Opto Pickup Assembly ....282
12.5.7.4. GFC Wheel Drive ....282
12.5.7.5. IR Source ....282
12.5.7.6. Pressure/Flow Sensor Assembly ....283
12.5.8. Motherboard ....284
12.5.8.1. A/D Functions ....284
12.5.8.2. Test Channel / Analog Outputs Voltage ....284
12.5.8.3. Analog Outputs: Current Loop ....285
12.5.8.4. Status Outputs ....286
12.5.8.5. Control Inputs – Remote Zero, Span ....286
12.5.9. CPU ....287
12.5.10. RS-232 Communications ....287
12.5.10.1. General RS-232 Troubleshooting ....287
12.5.10.2. Troubleshooting Analyzer/Modem or Terminal Operation ....288
12.5.11. The Optional $CO_2$ Sensor ....288
12.6. Repair Procedures ....289
12.6.1. Repairing Sample Flow Control Assembly ....289
12.6.2. Removing/Replacing the GFC Wheel ....290
12.6.3. Checking and Adjusting the Sync/Demodulator, Circuit Gain (CO MEAS) ....292
12.6.3.1. Checking the Sync/Demodulator Circuit Gain ....292
12.6.3.2. Adjusting the Sync/Demodulator, Circuit Gain ....293
12.6.4. Disk-On-Module Replacement ....294
12.7. Frequently Asked Questions ....295
12.8. Technical Assistance ....296
**13. THEORY OF OPERATION ....297**
13.1. Measurement Method ....297
13.1.1. Beer's Law ....297
13.2. Measurement Fundamentals ....298
13.2.1. Gas Filter Correlation ....299
13.2.1.1. The GFC Wheel ....299
13.2.1.2. The Measure Reference Ratio ....300
13.2.1.3. Summary Interference Rejection ....303
13.3. Flow Rate Control ....304
13.3.1.1. Critical Flow Orifice ....305
13.3.2. Particulate Filter ....306
13.3.3. Pneumatic Sensors ....306
13.3.3.1. Sample Pressure Sensor ....306
13.3.3.2. Sample Flow Sensor ....306
13.4. Electronic Operation ....306
13.4.1. CPU ....309
13.4.1.1. Disk-On-Module (DOM) ....309
13.4.1.2. Flash Chip ....309
13.4.2. Optical Bench & GFC Wheel ....310
13.4.2.1. Temperature Control ....310
13.4.2.2. IR Source ....310
13.4.2.3. GFC Wheel ....310
13.4.2.4. IR Photo-Detector ....312
13.4.3. Synchronous Demodulator (Sync/Demod) Assembly ....312
13.4.3.1. Signal Synchronization and Demodulation ....313

13.4.3.2. Sync/Demod Status LEDs ....314
13.4.3.3. Photo-Detector Temperature Control ....315
13.4.3.4. Dark Calibration Switch ....315
13.4.3.5. Electric Test Switch ....315
13.4.4. Relay Board ....315
13.4.4.1. Heater Control ....315
13.4.4.2. GFC Wheel Motor Control ....315
13.4.4.3. Zero/Span Valve Options ....316
13.4.4.4. IR Source ....316
13.4.4.5. Status LEDs ....317
13.4.4.6. I2C Watch Dog Circuitry ....317
13.4.5. MotherBoard ....318
13.4.5.1. A to D Conversion ....318
13.4.5.2. Sensor Inputs ....318
13.4.5.3. Thermistor Interface ....319
13.4.5.4. Analog Outputs ....319
13.4.5.5. Internal Digital I/O ....319
13.4.5.6. External Digital I/O ....319
13.4.6. $I^2C$ Data Bus ....320
13.4.7. Power Supply/ Circuit Breaker ....320
13.4.8. Front Panel Touchscreen/Display Interface ....322
13.4.8.1. LVDS Transmitter Board ....322
13.4.8.2. Front Panel Touchscreen/Display Interface PCA ....322
13.5. Software Operation ....323
13.5.1. Adaptive Filter ....323
13.5.2. Calibration - Slope and Offset ....324
13.5.3. Measurement Algorithm ....324
13.5.4. Temperature and Pressure Compensation ....324
13.5.5. Internal Data Acquisition System (DAS) ....324
**14. A PRIMER ON ELECTRO-STATIC DISCHARGE ....325**
14.1. How Static Charges are Created ....325
14.2. How Electro-Static Charges Cause Damage ....326
14.3. Common Myths About ESD Damage ....327
14.4. Basic Principles of Static Control ....328
14.4.1. General Rules ....328
14.4.2. Basic anti-ESD Procedures for Analyzer Repair and Maintenance ....329
14.4.2.1. Working at the Instrument Rack ....329
14.4.2.2. Working at an Anti-ESD Work Bench ....330
14.4.2.3. Transferring Components from Rack to Bench and Back ....330
14.4.2.4. Opening Shipments from Teledyne API's Customer Service ....331
14.4.2.5. Packing Components for Return to Teledyne API's Customer Service ....331

# LIST OF APPENDICES

APPENDIX A - VERSION SPECIFIC SOFTWARE DOCUMENTATION
APPENDIX B - T300/T300M SPARE PARTS LIST
APPENDIX C - REPAIR QUESTIONNAIRE - T300
APPENDIX D - SCHEMATICS

# LIST OF FIGURES


Figure 3-1: Front Panel Layout....37
Figure 3-2: Display Screen and Touch Control....38
Figure 3-3: Display/Touch Control Screen Mapped to Menu Charts....40
Figure 3-4: Rear Panel Layout....41
Figure 3-5: Internal Layout – T300....43
Figure 3-6: Internal Layout – T300M....44
Figure 3-7: Optical Bench Layout (shorter bench, T300M, shown)....45
Figure 3-8: Analog In Connector....47
Figure 3-9: Analog Output Connector....48
Figure 3-10: Current Loop Option Installed on Motherboard....49
Figure 3-11: Status Output Connector....50
Figure 3-12: Control Input Connector....52
Figure 3-13: Concentration Alarm Relay....53
Figure 3-14: Rear Panel Connector Pin-Outs for RS-232 Mode....56
Figure 3-15: Default Pin Assignments for CPU COM Port connector (RS-232)....57
Figure 3-16: Jumper and Cables for Multidrop Mode....59
Figure 3-17: RS-232-Multidrop PCA Host/Analyzer Interconnect Diagram....60
Figure 3-18: Pneumatic Connections–Basic Configuration–Using Bottled Span Gas....63
Figure 3-19: Pneumatic Connections–Basic Configuration–Using Gas Dilution Calibrator....63
Figure 3-20: T300/T300M Internal Gas Flow (Basic Configuration)....65
Figure 3-21: Pneumatic Connections – Option 50A: Zero/Span Calibration Valves....66
Figure 3-22: Internal Pneumatic Flow OPT 50A – Zero/Span Valves....67
Figure 3-23: Pneumatic Connections – Option 50B: Ambient Zero/Pressurized Span Calibration Valves....68
Figure 3-24: Internal Pneumatic Flow OPT 50B – Zero/Span/Shutoff Valves....69
Figure 3-25: Pneumatic Connections – Zero Scrubber/Pressurized Span Calibration Valves (Opt 50E)....70
Figure 3-26: Internal Pneumatic Flow OPT 50E – Zero Scrubber/Pressurized Span....71
Figure 3-27: Pneumatic Connections – Option 50H: Zero/Span Calibration Valves....72
Figure 3-28: Internal Pneumatic Flow OPT 50H – Zero Scrubber/Ambient Span....74
Figure 3-29: Zero/Span Calibration Procedure....84
Figure 4-1: Front Panel Display....89
Figure 4-2: Viewing T300/T300M Test Functions....91
Figure 4-3: Viewing and Clearing T300/T300M WARNING Messages....94
Figure 5-1: Analog Output Connector Pin Out....99
Figure 5-2: COMM– Machine ID....113
Figure 5-3: Accessing the Analog I/O Configuration Submenus....121
Figure 5-4: Setup for Checking / Calibrating DCV Analog Output Signal Levels....128
Figure 5-5: Setup for Checking / Calibration Current Output Signal Levels Using an Ammeter....130
Figure 5-6: Alternative Setup Using 250Ω Resistor for Checking Current Output Signal Levels....132
Figure 5-7. DIAG – Analog Inputs (Option) Configuration Menu....136
Figure 6-1: COM1[2] – Communication Modes Setup....145
Figure 6-2: COMM Port Baud Rate....146
Figure 6-3: COMM – COM1 Test Port....147
Figure 6-4: COMM – LAN / Internet Manual Configuration....150
Figure 6-5 : COMM – LAN / Internet Automatic Configuration (DHCP)....151
Figure 7-1: Default DAS Channel Setup....171
Figure 7-2: APICOM Remote Control Program Interface....186
Figure 7-3: APICOM User Interface for Configuring the DAS....187
Figure 7-4: DAS Configuration Through a Terminal Emulation Program....188
Figure 9-1: Pneumatic Connections – Basic Configuration – Using Bottled Span Gas....200
Figure 9-2: Pneumatic Connections – Basic Configuration – Using Gas Dilution Calibrator....200
Figure 9-3: Pneumatic Connections – Option 50A: Ambient Zero/Ambient Span Calibration Valves....205
Figure 9-4: Pneumatic Connections – Option 50B: Ambient Zero/Pressurized Span Calibration Valves....206
Figure 9-5: Pneumatic Connections – Option 50H: Zero/Span Calibration Valves....206

Figure 9-6: Pneumatic Connections – Option 50E: Zero/Span Calibration Valves ..... 207
Figure 9-7: $O_2$ Sensor Calibration Set Up ..... 223
Figure 9-8: $CO_2$ Sensor Calibration Set Up ..... 227
Figure 11-1: Sample Particulate Filter Assembly ..... 250
Figure 12-1: Viewing and Clearing Warning Messages ..... 256
Figure 12-2: Example of Signal I/O Function ..... 262
Figure 12-3: CPU Status Indicator ..... 263
Figure 12-4: Sync/Demod Board Status LED Locations ..... 264
Figure 12-5: Relay Board Status LEDs ..... 265
Figure 12-6: T300/T300M – Basic Internal Gas Flow ..... 268
Figure 12-7: Internal Pneumatic Flow OPT 50A – Zero/Span Valves (OPT 50A & 50B) ..... 268
Figure 12-8: Internal Pneumatic Flow OPT 50B – Zero/Span/Shutoff Valves ..... 269
Figure 12-9: Internal Pneumatic Flow OPT 50H – Zero/Span Valves with Internal Zero Air Scrubber ..... 269
Figure 12-10: Internal Pneumatic Flow OPT 50E – Zero/Span/Shutoff w/ Internal Zero Air Scrubber ..... 270
Figure 12-11: T300/T300M – Internal Pneumatics with $O_2$ Sensor Option 65A ..... 270
Figure 12-12: T300/T300M – Internal Pneumatics with $CO_2$ Sensor Option 67A ..... 271
Figure 12-13: Location of Diagnostic LEDs on$CO_2$ Sensor PCA ..... 288
Figure 12-14: Critical Flow Restrictor Assembly/Disassembly ..... 289
Figure 12-15: Opening the GFC Wheel Housing ..... 290
Figure 12-16: Removing the Opto-Pickup Assembly ..... 291
Figure 12-17: Removing the GFC Wheel Housing ..... 291
Figure 12-18: Removing the GFC Wheel ..... 292
Figure 12-19: Location of Sync/Demod Housing Mounting Screws ..... 293
Figure 12-20: Location of Sync/Demod Gain Potentiometer ..... 293
Figure 13-1: Measurement Fundamentals ..... 299
Figure 13-2: GFC Wheel ..... 299
Figure 13-3: Measurement Fundamentals with GFC Wheel ..... 300
Figure 13-4: Affect of CO in the Sample on CO MEAS & CO REF ..... 301
Figure 13-5: Effects of Interfering Gas on CO MEAS & CO REF ..... 302
Figure 13-6: Chopped IR Signal ..... 302
Figure 13-7: Internal Pneumatic Flow – Basic Configuration ..... 304
Figure 13-8: Flow Control Assembly & Critical Flow Orifice ..... 305
Figure 13-9: Electronic Block Diagram ..... 308
Figure 13-10. CPU Board ..... 309
Figure 13-11: GFC Light Mask ..... 311
Figure 13-12: Segment Sensor and M/R Sensor Output ..... 312
Figure 13-13: T300/T300M Sync/Demod Block Diagram ..... 313
Figure 13-14: Sample & Hold Timing ..... 314
Figure 13-15: Location of relay board Status LEDs ..... 317
Figure 13-16: Power Distribution Block Diagram ..... 321
Figure 13-17: Front Panel and Display Interface Block Diagram ..... 322
Figure 13-18: Basic Software Operation ..... 323
Figure 14-1: Triboelectric Charging ..... 325
Figure 14-2: Basic anti-ESD Workbench ..... 328

# LIST OF TABLES


Table 1-1: Analyzer Options....27
Table 2-1: T300/T300M Basic Unit Specifications....31
Table 2-2: $O_2$ Sensor Option Specifications....32
Table 2-3: $CO_2$ Sensor Option Specifications....32
Table 3-1: Ventilation Clearance....36
Table 3-2: Display Screen and Touch Control Description....39
Table 3-3: Rear Panel Description....42
Table 3-4: Analog Input Pin Assignments....47
Table 3-5: Analog Output Pin-Outs....48
Table 3-6: Status Output Signals....51
Table 3-7: Control Input Signals....52
Table 3-8: Zero/Span Valve Operating States for Option 50A....67
Table 3-9: Zero/Span Valve Operating States for Option 50B....69
Table 3-10: Zero/Span Valve Operating States for Option 51E....71
Table 3-11: Zero/Span Valve Operating States for Option 50H....74
Table 3-12: NIST-SRM's Available for Traceability of CO Calibration Gases....75
Table 3-13: Possible Warning Messages at Start-Up....77
Table 3-14: Possible Startup Warning Messages – T300 Analyzers with Options....78
Table 4-1: Analyzer Operating Modes....90
Table 4-2: Test Functions Defined....92
Table 4-3: List of Warning Messages....93
Table 4-4: Primary Setup Mode Features and Functions....95
Table 4-5: Secondary Setup Mode (SETUP>MORE) Features and Functions....96
Table 5-1: T300 Family Physical Range by Model....100
Table 5-2: Password Levels....109
Table 5-3: Variable Names (VARS)....114
Table 5-4: Diagnostic Mode (DIAG) Functions....116
Table 5-5: DIAG - Analog I/O Functions....120
Table 5-6: Analog Output Voltage Ranges....122
Table 5-7: Voltage Tolerances for the TEST CHANNEL Calibration....128
Table 5-8: Current Loop Output Check....132
Table 5-9: Test Channels Functions available on the T300/T300M's Analog Output....138
Table 5-10: CO Concentration Alarm Default Settings....140
Table 6-1: COMM Port Communication Modes....144
Table 6-2: Ethernet Status Indicators....148
Table 6-3: LAN/Internet Default Configuration Properties....149
Table 6-4: RS-232 Communication Parameters for Hessen Protocol....157
Table 6-5: Teledyne API's Hessen Protocol Response Modes....161
Table 6-6: Default Hessen Status Flag Assignments....165
Table 7-1: Front Panel LED Status Indicators for DAS....167
Table 7-2: DAS Data Channel Properties....169
Table 7-3: DAS Data Parameter Functions....176
Table 8-1: Interactive Mode Software Commands....190
Table 8-2: Teledyne API's Serial I/O Command Types....191
Table 9-1: NIST-SRMs Available for Traceability of CO Calibration Gases....198
Table 9-2: AUTOCAL Modes....212
Table 9-3: AutoCal Attribute Setup Parameters....213
Table 9-4: Example AutoCal Sequence....214
Table 9-5: Calibration Data Quality Evaluation....218
Table 10-1: Matrix for Calibration Equipment & Supplies....233
Table 10-2: Activity Matrix for Quality Assurance Checks....234
Table 10-3: Definition of Level 1 and Level 2 Zero and Span Checks....235
Table 11-1: T300/T300M Maintenance Schedule....247
Table 11-2: T300/T300M Test Function Record....248

Table 11-3: Predictive uses for Test Functions....249
Table 12-1: Warning Messages - Indicated Failures....257
Table 12-2: Test Functions - Indicated Failures....259
Table 12-3: Sync/Demod Board Status Failure Indications....264
Table 12-4: $I^2C$ Status LED Failure Indications....265
Table 12-5: Relay Board Status LED Failure Indications....266
Table 12-6: DC Power Test Point and Wiring Color Codes....279
Table 12-7: DC Power Supply Acceptable Levels....279
Table 12-8: Relay Board Control Devices....280
Table 12-9: Opto Pickup Board Nominal Output Frequencies....282
Table 12-10: Analog Output Test Function - Nominal Values Voltage Outputs....284
Table 12-11: Analog Output Test Function - Nominal Values Voltage Outputs....285
Table 12-12: Status Outputs Check....286
Table 13-1: Absorption Path Lengths for T300 and T300M....298
Table 13-2: Sync DEMOD Sample and Hold Circuits....314
Table 13-3: Sync/Demod Status LED Activity....314
Table 13-4: Relay Board Status LEDs....317
Table 14-1: Static Generation Voltages for Typical Activities....326
Table 14-2: Sensitivity of Electronic Devices to Damage by ESD....326

This page intentionally left blank.

# PART I

# GENERAL INFORMATION

# 1. INTRODUCTION, FEATURES AND OPTIONS

This section provides an overview of the Model T300 or T300M Analyzer, its features and its options, followed by a description of how this user manual is arranged.

## 1.1. T300 FAMILY OVERVIEW

The family includes the T300 and the T300M Gas Filter Correlation Carbon Monoxide Analyzer. The T300 family of analyzers is a microprocessor-controlled analyzer that determines the concentration of carbon monoxide (CO) in a sample gas drawn through the instrument. It uses a method based on the Beer-Lambert law, an empirical relationship that relates the absorption of light to the properties of the material through which the light is traveling over a defined distance. In this case the light is infrared radiation (IR) traveling through a sample chamber filled with gas bearing a varying concentration of CO.

The T300/T300M uses Gas Filter Correlation (GFC) to overcome the interfering effects of various other gases (such as water vapor) that also absorb IR. The analyzer passes the IR beam through a spinning wheel made up of two separate chambers: one containing a high concentration of CO known as the *reference*, and the other containing a neutral gas known as the *measure*. The concentration of CO in the sample chamber is computed by taking the ratio of the instantaneous measure and reference values and then compensating the ratio for sample temperature and pressure.

The T300/T300M Analyzer's multi-tasking software gives the ability to track and report a large number of operational parameters in real time. These readings are compared to diagnostic limits kept in the analyzers memory and should any fall outside of those limits the analyzer issues automatic warnings.

Built-in data acquisition capability, using the analyzer's internal memory, allows the logging of multiple parameters including averaged or instantaneous concentration values, calibration data, and operating parameters such as pressure and flow rate. Stored data are easily retrieved through the serial port or Ethernet port via our APICOM software or from the front panel, allowing operators to perform predictive diagnostics and enhanced data analysis by tracking parameter trends. Multiple averaging periods of one minute to 365 days are available for over a period of one year.

# 1.2. FEATURES

Some of the common features of your T300 family of analyzers include:

- LCD color graphics with touch screen interface
- Microprocessor controlled for versatility
- Multi-tasking software allows viewing of test variables during operation
- Continuous self checking with alarms
- Bi-directional USB, RS-232, and 10/100Base-T Ethernet ports for remote operation (optional RS-485)
- Front panel USB ports for peripheral devices and software downloads
- Digital status outputs indicate instrument operating condition
- Adaptive signal filtering optimizes response time
- Gas Filter Correlation (GFC) Wheel for CO specific measurement
- GFC Wheel guaranteed against leaks for 5 years
- Temperature and pressure compensation
- Comprehensive internal data logging with programmable averaging periods
- Remote operation when used with Teledyne API's APICOM software

**T300 FEATURES:**

- Ranges, 0-1 ppm to 0-1000 ppm, user selectable
- 14 meter path length for sensitivity

**T300M FEATURES:**

- Ranges, 0-1 ppm; Max: 0-5000 ppm, user selectable
- 2.5 meter path length for dynamic range

# 1.3. T300/T300M DOCUMENTATION

In addition to this operation manual (part number 06807), two other manuals are available for download from Teledyne API's website at http://www.teledyne-api.com/manuals/, to support the operation of this instrument:.

- APICOM software manual, part number 03945
- DAS Manual, part number 02837

# 1.4. OPTIONS

The options available for your analyzer are presented in Table 1-1 with name, option number, a description and/or comments, and if applicable, cross-references to technical details in this manual, such as setup and calibration. To order these options or to learn more about them, please contact the Sales department of Teledyne - Advanced Pollution Instruments at:


| | |
|---|---|
| TOLL-FREE: | 800-324-5190 |
| TEL: | +1 858-657-9800 |
| FAX: | +1 858-657-9816 |
| E-MAIL: | apisales@teledyne.com |
| WEB SITE: | http://www.teledyne-api.com/ |


**Table 1-1: Analyzer Options**

| Option | Option Number | Description/Notes | Reference |
|---|---|---|---|
| **Pumps** | | **Pumps meet all typical AC power supply standards while exhibiting same pneumatic performance.** | |
| | 10A | External Pump 100V - 120V @ 60 Hz | N/A |
| | 10B | External Pump 220V - 240V @ 50 Hz | N/A |
| | 10C | External Pump 220V - 240V @ 60 Hz | N/A |
| | 10D | External Pump 100V – 12V @ 50 Hz | N/A |
| | 10E | External Pump 100V @ 60 Hz | N/A |
| | 11 | Pumpless, internal or external Pump Pack | N/A |
| | 13 | High Voltage Internal Pump 240V @ 50Hz | N/A |
| **Rack Mount Kits** | | **Options for mounting the analyzer in standard 19” racks** | |
| | 20A | Rack mount brackets with 26 in. chassis slides | N/A |
| | 20B | Rack mount brackets with 24 in. chassis slides | N/A |
| | 21 | Rack mount brackets only (compatible with carrying strap, Option 29) | N/A |
| | 23 | Rack mount for external pump pack (no slides) | N/A |
| **Carrying Strap/Handle** | | **Side-mounted strap for hand-carrying analyzer** | |
| | 29 | Extends from “flat” position to accommodate hand for carrying.<br>Recesses to 9mm (3/8”) dimension for storage.<br>Can be used with rack mount brackets, Option 21.<br>Cannot be used with rack mount slides.<br>**CAUTION - GENERAL SAFETY HAZARD**<br>**A fully loaded T300 with valve options weighs about 18 kg or 40 lbs. (T300M weighs 22.7 kg or 50 lbs).**<br>**To avoid personal injury we recommend that two persons lift and carry the analyzer. Disconnect all cables and tubing from the analyzer before moving it.** | N/A |
| **Analog Inputs** | | Used for connecting external voltage signals from other instrumentation (such as meteorological instruments). | |
| | 64 | Also can be used for logging these signals in the analyzer’s internal DAS | Sections 3.3.1.2, 5.9.3.11, and 7 |

| Option | Option Number | Description/Notes | | Reference |
|---|---|---|---|---|
| **Current Loop Analog Outputs** | | **Adds isolated, voltage-to-current conversion circuitry to the analyzer's analog outputs.** | | |
| | 41 | Can be configured for any output range between 0 and 20 mA.<br>May be ordered separately for any of the analog outputs.<br>Can be installed at the factory or retrofitted in the field. | | Sections 3.3.1.3, 3.3.1.4, 5.9.1, 5.9.2 and 5.9.3.7 |
| **Parts Kits** | | **Spare parts and expendables** | | |
| | 42A | **Expendables Kit** includes a recommended set of expendables for one year of operation of this instrument including replacement sample particulate filters. | | Appendix B |
| | 45 | **Spare Parts Kit** includes spares parts for one unit. | | Appendix B |
| **Calibration Valves** | | **Used to control the flow of calibration gases generated from external sources, rather than manually switching the rear panel pneumatic connections.** | | |
| | 50A | Ambient Zero and Ambient Span. | | Sections 3.3.2.3 and 3.3.2.4 |
| | 50B | Ambient Zero and Pressurized Span | | Sections 3.3.2.5 and 3.3.2.6 |
| | 50E | Zero Scrubber and Pressurized Span | | Sections 3.3.2.7 and 3.3.2.8 |
| | 50H | Zero Scrubber and Ambient Span | | Sections 3.3.2.9 and 3.3.2.10 |
| **Communication Cables** | | **For remote serial, network and Internet communication with the analyzer.** | | |
| | | Type | Description | |
| | 60A | RS-232 | Shielded, straight-through DB-9F to DB-25M cable, about 1.8 m long. Used to interface with older computers or code activated switches with DB-25 serial connectors. | Section 3.3.1.8 and 6.3 |
| | 60B | RS-232 | Shielded, straight-through DB-9F to DB-9F cable of about 1.8 m length. | Sections 3.3.1.8, and 6.3 |
| | 60C | Ethernet | Patch cable, 2 meters long, used for Internet and LAN communications. | Sections 3.3.1.8 and 6.5 |
| | 60D | USB | Cable for direct connection between instrument (rear panel USB port) and personal computer. | Sections 3.3.1.8 and 6.6 |
| **Concentration Alarm Relay** | | **Issues warning when gas concentration exceeds limits set by user.** | | |
| | 61 | Four (4) "dry contact" relays on the rear panel of the instrument. This relay option is different from and in addition to the "Contact Closures" that come standard on all TAPI instruments. | | Section 3.3.1.7 |
| **RS-232 Multidrop** | | **Enables communications between host computer and up to eight analyzers.** | | |
| | 62 | Multidrop card seated on the analyzer's CPU card.<br>Each instrument in the multidrop network requires this card and a communications cable (Option 60B). | | Sections 3.3.1.8 and 5.7.1 |
| **Second Gas Sensors** | | **Choice of one additional gas sensor.** | | |
| | 65A | Oxygen ($O_2$) Sensor | | • Sections 3.3.1.3 and 9.7.1 |
| | 67A | Carbon Dioxide ($CO_2$) Sensor | | • Sections 3.3.1.3 and 9.7.2 |

| Option | Option Number | Description/Notes | Reference |
|---|---|---|---|
| **Special Features** | | **Built in features, software activated** | |
| | N/A | **Maintenance Mode Switch**, located inside the instrument, places the analyzer in maintenance mode where it can continue sampling, yet ignore calibration, diagnostic, and reset instrument commands. This feature is of particular use for instruments connected to Multidrop or Hessen protocol networks.<br>Call Customer Service for activation. | N/A |
| | N/A | **Second Language Switch** activates an alternate set of display messages in a language other than the instrument's default language.<br>Call Customer Service for a specially programmed Disk on Module containing the second language. | N/A |
| | N/A | **Dilution Ratio Option** allows the user to compensate for diluted sample gas, such as in continuous emission monitoring (CEM) where the quality of gas in a smoke stack is being tested and the sampling method used to remove the gas from the stack dilutes the gas.<br>Call Customer Service for activation. | Sections 3.4.4.2 and 5.4.5 |

This page intentionally left blank.

# 2. SPECIFICATIONS AND APPROVALS

This section presents specifications for the T300/T300M analyzer and for its second gas sensor options, EPA equivalency designation, and compliance statements.

## 2.1. SPECIFICATIONS

**Table 2-1: T300/T300M Basic Unit Specifications**

| Parameter | Specification |
|---|---|
| Ranges | Min: 0-1 ppm Full scale<br>Max: 0-1,000 ppm Full scale (selectable, dual ranges and auto ranging supported) |
| Measurement Units | T300: ppb, ppm, µg/m$^3$, mg/m$^3$ (user selectable)<br>T300M: ppm, mg/m$^3$ (user selectable) |
| Zero Noise[1] | T300: < 0.02 ppm RMS<br>T300M: ≤ 0.1 ppm RMS |
| Span Noise[1] | T300:<0.5% of rdg RMS over 5ppm [3]<br>T300M:>0.5% of rdg RMS over 20ppm |
| Lower Detectable Limit[1] | T300: < 0.04 ppm<br>T300M: 0.2 ppm |
| Zero Drift (24 hours) [2] | T300: < 0.1 ppm<br>T300M: <0.5 ppm |
| Span Drift (24 hours) [2] | T300: < 0.5% of reading<br>T300M: 0.5ppm |
| Lag Time[1] | 10 seconds |
| Rise/Fall Time [1] | <60 seconds to 95% |
| Linearity | T300: 1% of full scale[5];<br>T300M: 0 - 3000 ppm: 1% full scale; 3000 - 5000 ppm: 2% full scale |
| Precision | T300: The greater of 0.5% of reading or 0.2ppm;<br>T300M: The greater of 1.0% of reading or 1ppm |
| Sample Flow Rate | 800 cm$^3$/min. ±10%<br>($O_2$ Sensor option adds 120 cm³/min to total flow when installed) |
| AC Power | 100V-120V, 220V-240V, 50/60 Hz |
| Analog Output Ranges | All Outputs: 10V, 5V, 1V, 0.1V (selectable)<br>Three outputs convertible to 4-20 mA isolated current loop.<br>All Ranges with 5% under/over-range |
| Analog Output Resolution | 1 part in 4096 of selected full-scale voltage |
| Recorder Offset | ±10% |
| Standard I/O | 1 Ethernet: 10/100Base-T<br>2 RS-232 (300 – 115,200 baud)<br>2 USB device ports<br>8 opto-isolated digital status outputs<br>6 opto-isolated digital control inputs (2 defined, 4 spare)<br>4 user configurable analog outputs |

| Parameter | Specification |
|---|---|
| Optional I/O | 1 USB com port<br>1 RS485<br>8 analog inputs (0-10V, 12-bit)<br>4 digital alarm outputs (2 opto-isolated and 2 dry contact)<br>Multidrop RS232<br>3 4-20mA current outputs |
| Temperature Range | 5 - 40°C operating, 10 - 40°C EPA Equivalency (T300 only) |
| Humidity Range | 0-95% RH, Non-Condensing |
| Temp Coefficient | < 0.05 % per °C (minimum 50 ppb/°C) |
| Voltage Coefficient | < 0.05 % per V |
| Dimensions (HxWxD) | 7" x 17" x 23.5" (178 mm x 432 mm x 597 mm) |
| Weight | T300: 40 lbs (18.1 kg); T300M: 38.4 lbs (17.2) |
| Environmental Conditions | Installation Category (Over voltage Category) II Pollution Degree 2 |
| [1] As defined by the USEPA | [2] At constant temperature and pressure |

**Table 2-2: $O_2$ Sensor Option Specifications**

| Parameter | Description |
|---|---|
| Ranges | 0-1% to 0-100% user selectable. Dual ranges and auto-ranging supported. |
| Zero Noise[1] | <0.02% $O_2$ |
| Lower Detectable Limit[2] | <0.04% $O_2$ |
| Zero Drift (24 hours) [3] | <± 0.02% $O_2$ |
| Zero Drift (7 days) | <±- 0.05% $O_2$ |
| Span Noise[1] | <± 0.05% $O_2$ |
| Span Drift (7 days) | <± 0.1% $O_2$ |
| Accuracy | (intrinsic error) <± 0.1% $O_2$ |
| Linearity | <± 0.1 % $O_2$ |
| Temp Coefficient | <± 0.05% $O_2$ /°C, |
| Rise and Fall Time | <60 seconds to 95% |

[1] As defined by the USEPA
[2] Defined as twice the zero noise level by the USEPA
[3] Note: zero drift is typically <± 0.1% $O_2$ during the first 24 hrs of operation

**Table 2-3: $CO_2$ Sensor Option Specifications**

| Parameter | Description |
|---|---|
| Ranges | 0-1% to 0-20% user selectable. Dual ranges and auto-ranging supported. |
| Zero Noise[1] | <0.02% $CO_2$ |
| Lower Detectable Limit[2] | <0.04% $CO_2$ |
| Zero Drift (24 hours) | <± 0.02% $CO_2$ |
| Zero Drift (7 days) | <± 0.05% $CO_2$ |
| Span Noise[1] | <± 0.1% $CO_2$ |
| Span Drift (7 days) | <± 0.1% $CO_2$ |

| | |
|---|---|
| Accuracy | <± (0.02% $CO_2$ + 2% of reading) |
| Linearity | <± 0.1% $CO_2$ |
| Temperature Coefficient | <± 0.01% $CO_2$ /°C |
| Rise and Fall Time | <60 seconds to 95% |

[1] As defined by the USEPA
[2] Defined as twice the zero noise level by the USEPA

# 2.2. EPA EQUIVALENCY DESIGNATION

**Note**

**T300M: EPA equivalency does not apply to this model.**

Teledyne API's Model T300, Carbon Monoxide Analyzer, is designated as Reference Method Number RFCA-1093-093 as defined in 40 CFR Part 53, when operated under the following conditions:

- Range: Any range from 10 ppm to 50 ppm
- Ambient temperature range of 10 to 40°C
- Sample filter: Equipped with 5-micron PTFE filter element in the internal filter assembly
- Software settings:

| | |
|---|---|
| Dilution factor | 1.0 |
| AutoCal | ON or OFF |
| Dynamic Zero | ON or OFF |
| Dynamic Span | OFF |
| Dual Range | ON or OFF |
| Auto Range | ON or OFF |
| Temp/Pres Compensation | ON |

Under the designation, the analyzer may be operated with or without the following options:

- Rack mount with slides
- Rack mount without slides, ears only
- Zero/span valve options
  - Option 50A – Sample/Cal valves, or
  - Option 50B – Sample/Cal valves with span shutoff & flow control
- Internal zero/span (IZS) option with either:
  - Option 51A – Sample/Cal valves, or
  - Option 51C – Sample/Cal valves with span shutoff & flow control
- 4-20mA, isolated output

# 2.3. APPROVALS AND CERTIFICATIONS

The Teledyne API Model T300/T300M analyzer was tested and certified for Safety and Electromagnetic Compatibility (EMC). This section presents the compliance statements for those requirements and directives.

## 2.3.1. SAFETY

IEC 61010-1:2001, Safety requirements for electrical equipment for measurement, control, and laboratory use.

**CE:** 2006/95/EC, Low-Voltage Directive

**North American:**
cNEMKO (Canada): CAN/CSA-C22.2 No. 61010-1-04
NEMKO-CCL (US): UL No. 61010-1 (2nd Edition)

## 2.3.2. EMC

EN 61326-1 (IEC 61326-1), Class A Emissions/Industrial Immunity

EN 55011 (CISPR 11), Group 1, Class A Emissions

FCC 47 CFR Part 15B, Class A Emissions

**CE:** 2004/108/EC, Electromagnetic Compatibility Directive

## 2.3.3. OTHER TYPE CERTIFICATIONS

**MCERTS:** Sira MC 050069/04

For additional certifications, please contact Customer Service.

# 3. GETTING STARTED

This section first introduces you to the instrument, then presents the procedures for getting started, i.e., unpacking and inspection, making electrical and pneumatic connections, and conducting an initial calibration check.

## 3.1. UNPACKING THE T300/T300M ANALYZER

**CAUTION**
**GENERAL SAFETY HAZARD**
**To avoid personal injury, always use two persons to lift and carry the T300/T300M.**

**ATTENTION**

**COULD DAMAGE INSTRUMENT AND VOID WARRANTY**
**Printed Circuit Assemblies (PCAs) are sensitive to electro-static discharges too small to be felt by the human nervous system. Failure to use ESD protection when working with electronic assemblies will void the instrument warranty. See *A Primer on Electro-Static Discharge* in this manual for more information on preventing ESD damage.**

**CAUTION!**
Do not operate this instrument until you've removed dust plugs from SAMPLE and EXHAUST ports on the rear panel!

**Note**

**Teledyne API recommends that you store shipping containers/materials for future use if/when the instrument should be returned to the factory for repair and/or calibration service. See Warranty section in this manual and shipping procedures on our Website at http://www.teledyne-api.com under Customer Support > Return Authorization.**

Verify that there is no apparent external shipping damage. If damage has occurred, please advise the shipper first, then Teledyne API.

Included with your analyzer is a printed record (Final Test and Validation Data Sheet: PN *04307; PN 04311)* of the final performance characterization performed on your instrument at the factory. This record is an important quality assurance and calibration record for this instrument. It should be placed in the quality records file for this instrument.

With no power to the unit, craefully remove the top cover of the analyzer and check for internal shipping damage by carrying out the following steps:

1. Carefully remove the top cover of the analyzer and check for internal shipping damage by:
   - Removing the setscrew located in the top, center of the Front panel;
   - Removing the two flat head, Phillips screws on the sides of the instrument (one per side towards the rear);
   - Sliding the cover backwards until it clears the analyzer's front bezel, and;
   - Lifting the cover straight up.
2. Inspect the interior of the instrument to make sure all circuit boards and other components are in good shape and properly seated.
3. Check the connectors of the various internal wiring harnesses and pneumatic hoses to make sure they are firmly and properly seated.
4. Verify that all of the optional hardware ordered with the unit has been installed. These are listed on the paperwork accompanying the analyzer.

**WARNING - ELECTRICAL SHOCK HAZARD**

**Never disconnect PCAs, wiring harnesses or electronic subassemblies while instrument is under power.**

## 3.1.1. VENTILATION CLEARANCE

Whether the analyzer is set up on a bench or installed into an instrument rack, be sure to leave sufficient ventilation clearance.

**Table 3-1: Ventilation Clearance**

| AREA | MINIMUM REQUIRED CLEARANCE |
|---|---|
| Back of the instrument | 4 in. |
| Sides of the instrument | 1 in. |
| Above and below the instrument | 1 in. |

Various rack mount kits are available for this analyzer. See Table 1-1 of this manual for more information.

# 3.2. INSTRUMENT LAYOUT

Instrument layout includes front panel and display, rear panel connectors, and internal chassis layout.

## 3.2.1. FRONT PANEL

Figure 3-1 shows the analyzer's front panel layout, followed by a close-up of the display screen in Figure 3-2, which is described in Table 3-2. The two USB ports on the front panel are provided for the connection of peripheral devices:

- plug-in mouse (not included) to be used as an alternative to the thouchscreen interface
- thumb drive (not included) to download updates to instruction software (contact TAPI Customer Service for information).

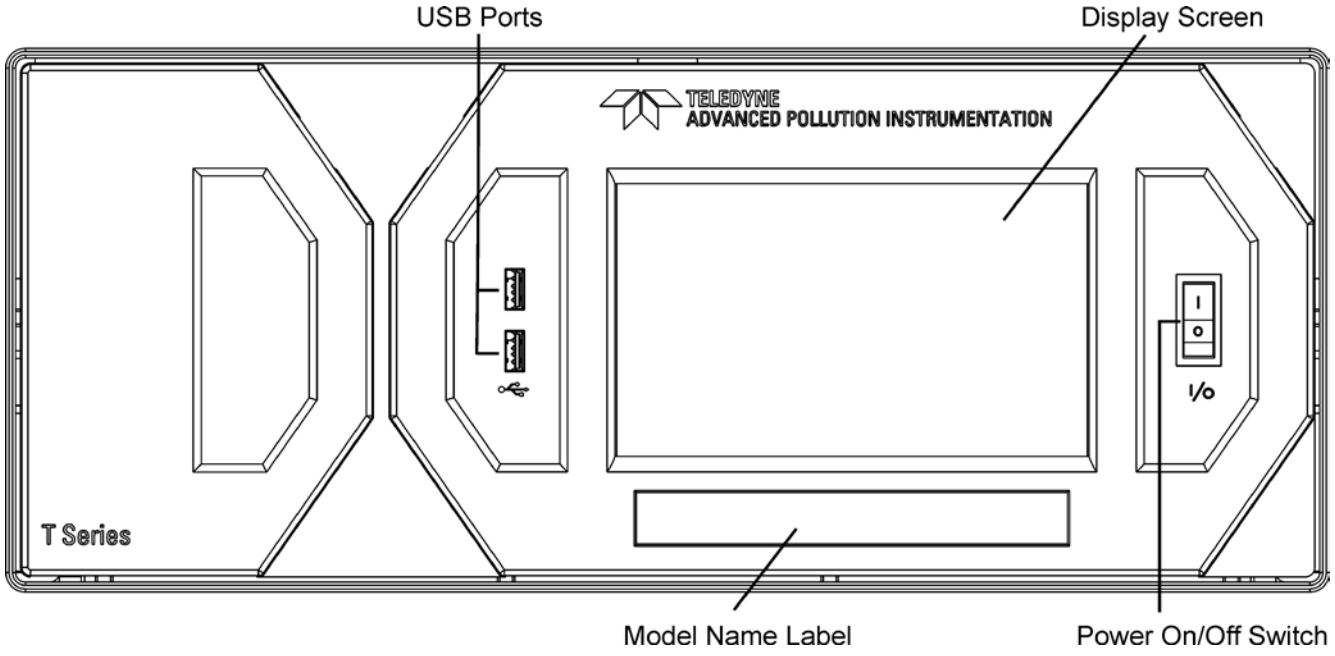


**Figure 3-1: Front Panel Layout**

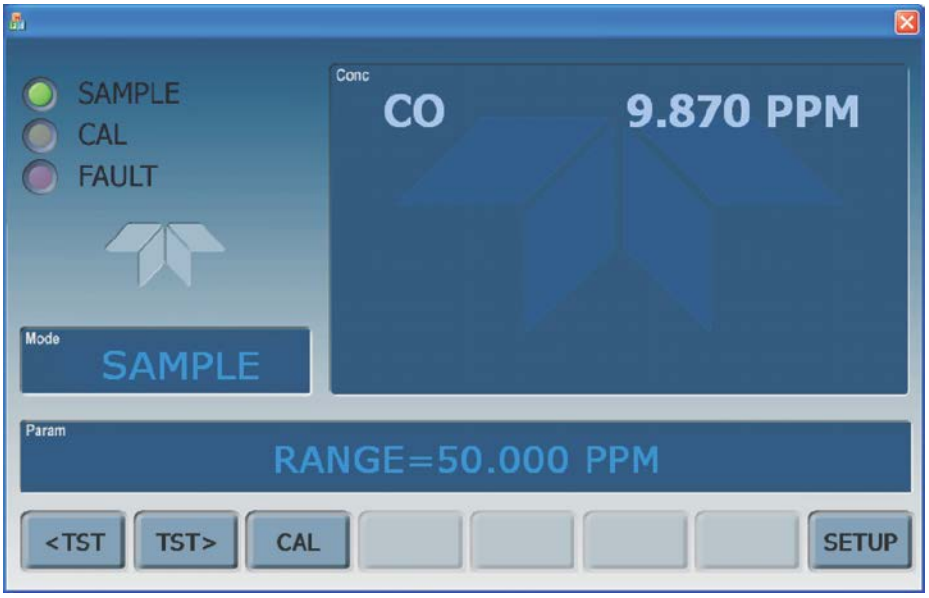


**Figure 3-2: Display Screen and Touch Control**

The front panel liquid crystal display screen includes touch control. Upon analyzer start-up, the screen shows a splash screen and other initialization indicators before the main display appears, similar to Figure 3-2 above (may or may not display a Fault alarm). The LEDs on the display screen indicate the Sample, Calibration and Fault states; also on the screen is the gas concentration field (Conc), which displays real-time readouts for the primary gas and for the secondary gas if installed. The display screen also shows what mode the analyzer is currently in, as well as messages and data (Param). Along the bottom of the screen is a row of touch control buttons; only those that are currently applicable will have a label. Table 3-2 provides detailed information for each component of the screen.

**ATTENTION**

**COULD DAMAGE INSTRUMENT AND VOID WARRANTY**

**Do not use hard-surfaced instruments such as pens to touch the control buttons.**

**Table 3-2: Display Screen and Touch Control Description**

| Field | Description/Function | | | |
|---|---|---|---|---|
| Status | LEDs indicating the states of Sample, Calibration and Fault, as follows: | | | |
| | Name | Color | State | Definition |
| | SAMPLE | Green | Off | Unit is not operating in Sample Mode, DAS is disabled. |
| | | | On | Sample Mode active; Front Panel Display being updated; DAS data being stored. |
| | | | Blinking | Unit is operating in Sample Mode, front panel display being updated, DAS hold-off mode is ON, DAS disabled |
| | CAL | Yellow | Off | Auto Cal disabled |
| | | | On | Auto Cal enabled |
| | | | Blinking | Unit is in calibration mode |
| | FAULT | Red | Off | No warnings exist |
| | | | Blinking | Warnings exist |
| Conc | Displays the actual concentration of the sample gas currently being measured by the analyzer in the currently selected units of measure | | | |
| Mode | Displays the name of the analyzer's current operating mode | | | |
| Param | Displays a variety of informational messages such as warning messages, operational data, test function values and response messages during interactive tasks. | | | |
| Control Buttons | Displays dynamic, context sensitive labels on each button, which is blank when inactive until applicable. | | | |

Figure 3-3 shows how the front panel display is mapped to the menu charts that are illustrated throughout this manual. The Mode, Param (parameters), and Conc (gas concentration) fields in the display screen are represented across the top row of each menu chart. The eight touch control buttons along the bottom of the display screen are represented in the bottom row of each menu chart.

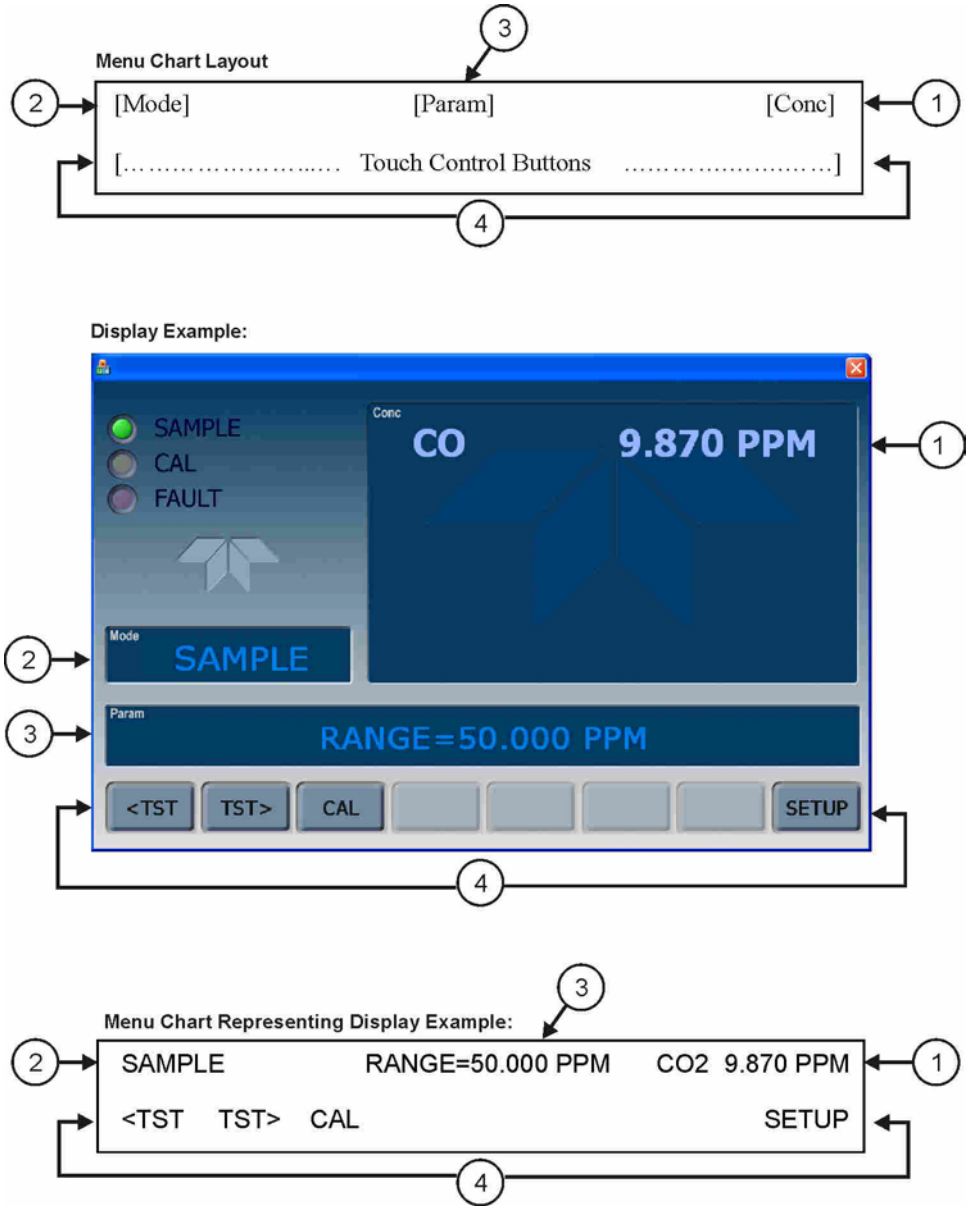


**Figure 3-3: Display/Touch Control Screen Mapped to Menu Charts**

**Note**

**The menu charts in this manual contain condensed representations of the analyzer's display during the various operations being described. These menu charts are not intended to be exact visual representations of the actual display.**

## 3.2.2. **REAR PANEL**

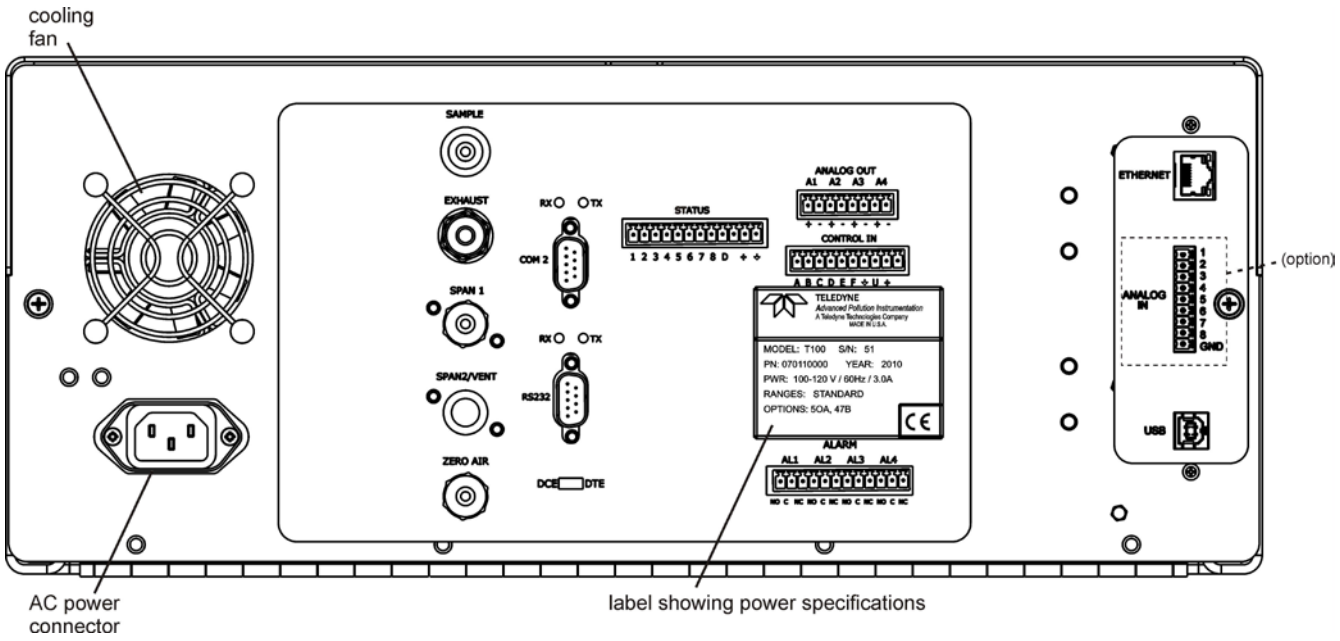


**Figure 3-4: Rear Panel Layout**

Table 3-3 provides a description of each component on the rear panel.

**Table 3-3: Rear Panel Description**

| Component | Function |
|---|---|
| **cooling fan** | Pulls ambient air into chassis through side vents and exhausts through rear. |
| **AC power connector** | Connector for three-prong cord to apply AC power to the analyzer.<br>**CAUTION! The cord's power specifications (specs) MUST comply with the power specs on the analyzer's rear panel Model number label** |
| **Model/specs label** | Identifies the analyzer model number and provides voltage and frequency specs |
| **SAMPLE** | Connect a gas line from the source of sample gas here.<br>Calibration gases are also inlet here on units without zero/span/shutoff valve options installed. |
| **EXHAUST** | Connect an exhaust gas line of not more than 10 meters long here that leads outside the shelter or immediate area surrounding the instrument. |
| **SPAN 1** | On units with zero/span/shutoff valve options installed, connect a gas line to the source of calibrated span gas here. |
| **SPAN2/VENT** | Used as a second cal gas input line when instrument is configured with zero/span valves and a dual gas option, or as a cal gas vent line when instrument is configured with a pressurized span option *(Call factory for details).* |
| **ZERO AIR** | Internal Zero Air: On units with zero/span/shutoff valve options installed but no internal zero air scrubber attach a gas line to the source of zero air here. |
| **RX TX** | LEDs indicate receive (RX) and transmit (TX) activity on the when blinking. |
| **COM 2** | Serial communications port for RS-232 or RS-485. (Sections 3.3.1.8, 5.7.3, 6). |
| **RS-232** | Serial communications port for RS-232 only. (Sections 3.3.1.8, 5.7, 6.3, 6.7.2.1) |
| **DCE DTE** | Switch to select either data terminal equipment or data communication equipment during RS-232 communication. (Section 6.1). |
| **STATUS** | For ouputs to devices such as Programmable Logic Controllers (PLCs). (Section 3.3.1.5). |
| **ANALOG OUT** | For voltage or current loop outputs to a strip chart recorder and/or a data logger. (Sections 3.3.1.3 and 3.3.1.4). |
| **CONTROL IN** | For remotely activating the zero and span calibration modes. (Section 3.3.1.6). |
| **ALARM** | Option for concentration alarms and system warnings. (Section 3.3.1.7). |
| **ETHERNET** | Connector for network or Internet remote communication, using Ethernet cable (Section 3.3.1.8). |
| **ANALOG IN** | Option for external voltage signals from other instrumentation and for logging these signals (Section 3.3.1.2) |
| **USB** | Connector for direct connection to laptop computer, using USB cable. (Section 3.3.1.8). |

## 3.2.3. **T300/T300M ANALYZER LAYOUT**

Figure 3-5 shows the T300 internal layout.

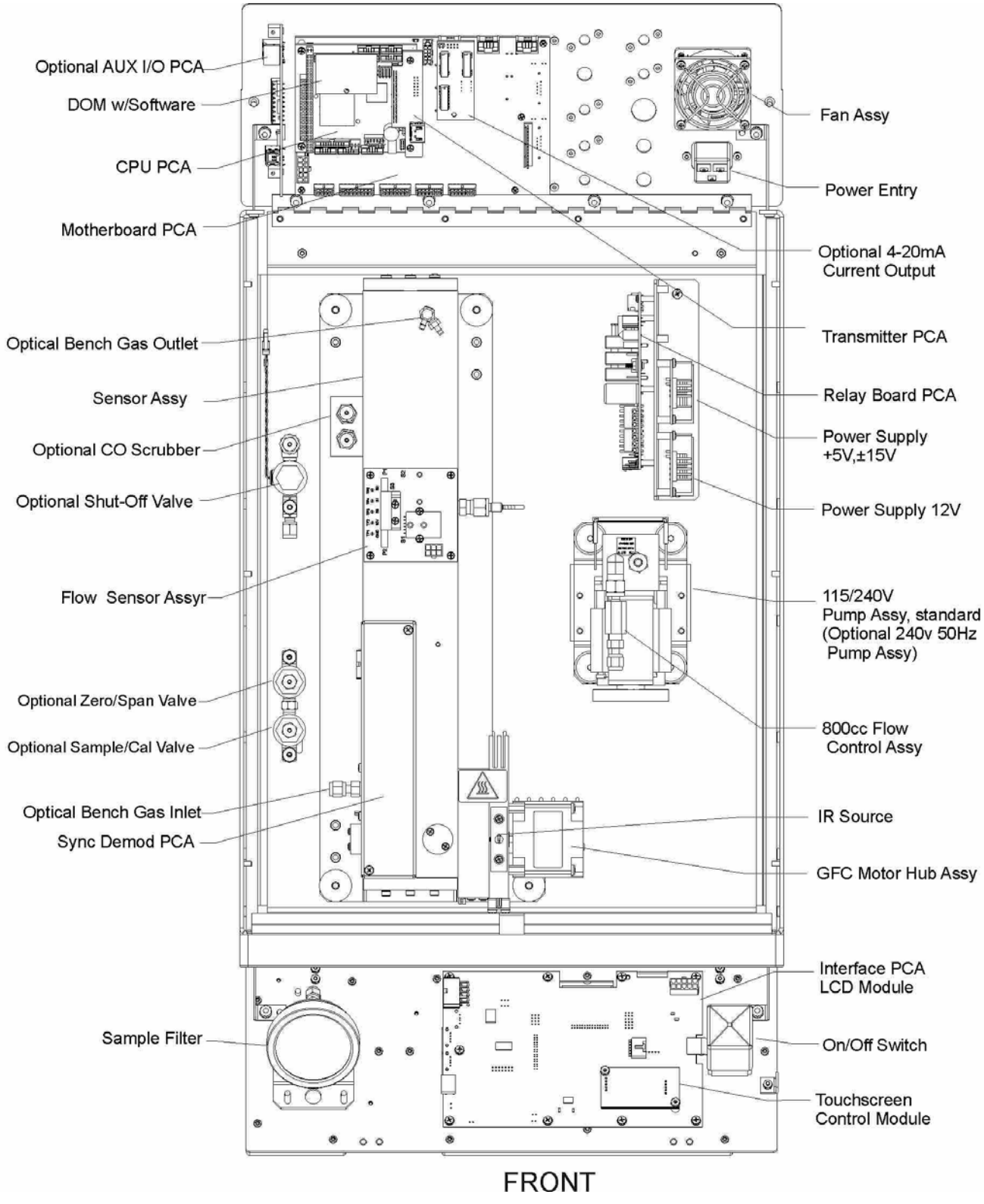


**Figure 3-5: Internal Layout – T300**

Figure 3-6 shows the T300M internal layout.

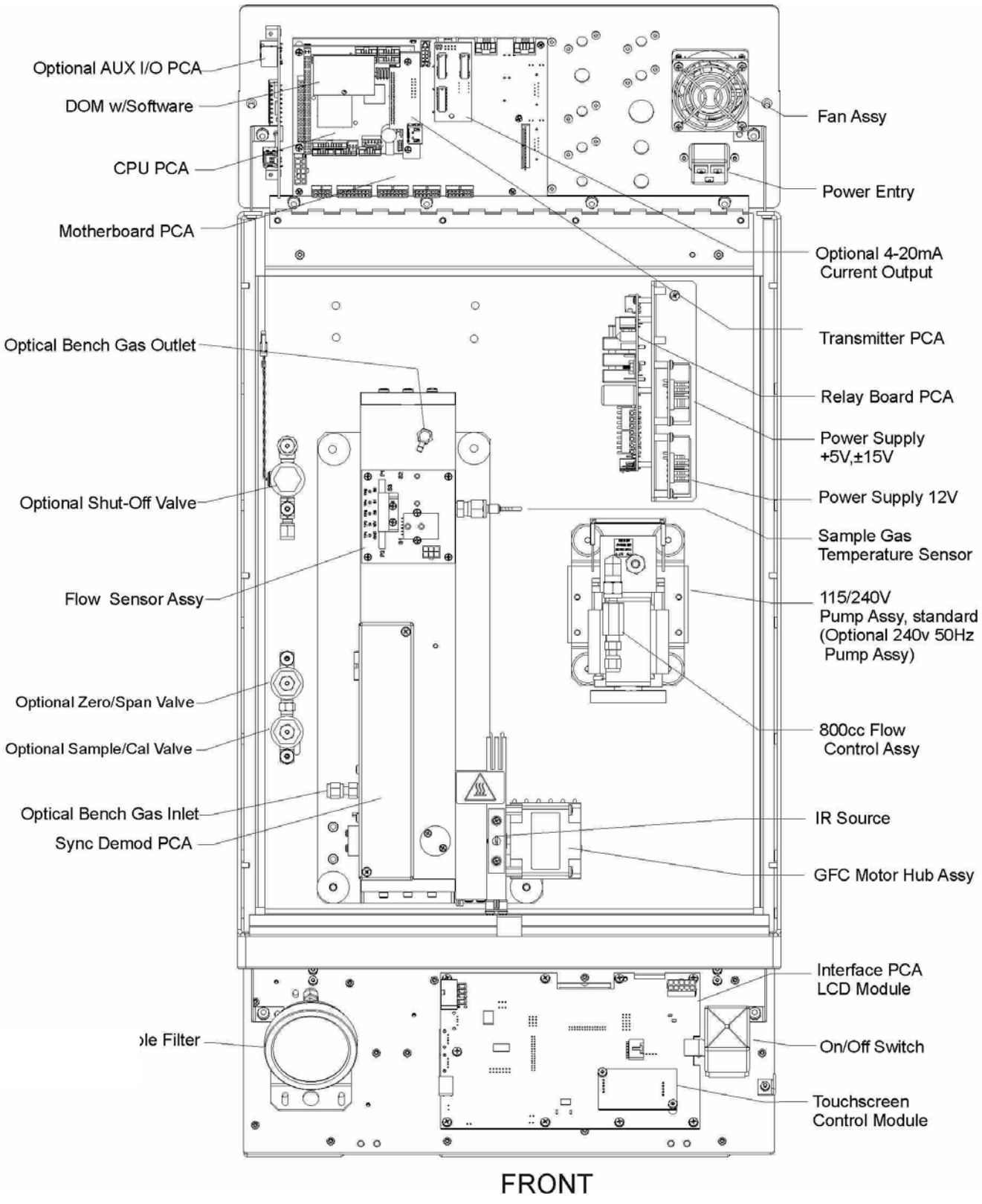


**Figure 3-6: Internal Layout – T300M**

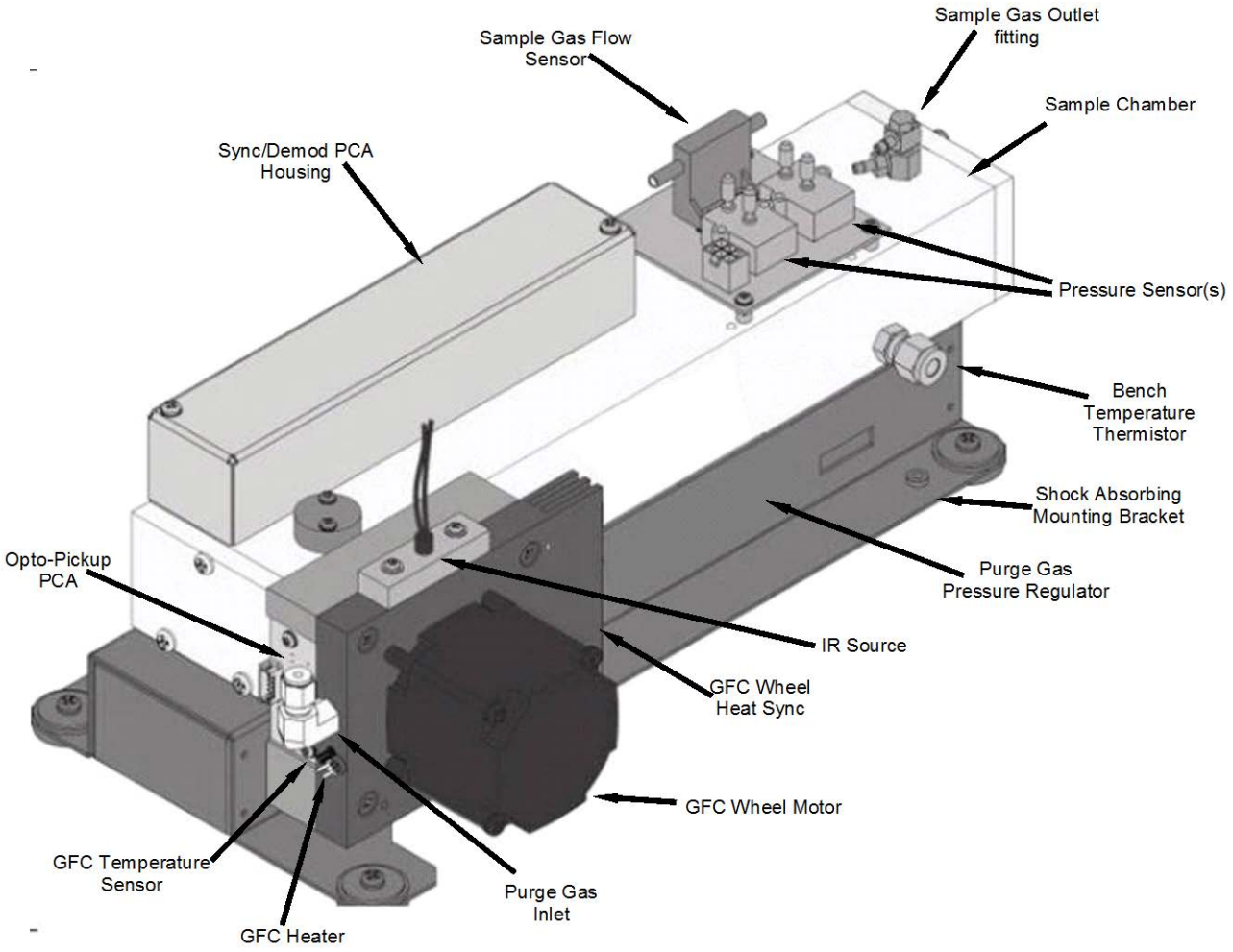


**Figure 3-7: Optical Bench Layout (shorter bench, T300M, shown)**

# 3.3. CONNECTIONS AND SETUP

This section presents the electrical (Section 3.3.1) and pneumatic (Section 3.3.2) connections for setup and preparing for instrument operation

## 3.3.1. ELECTRICAL CONNECTIONS

**Note** **To maintain compliance with EMC standards, it is required that the cable length be no greater than 3 meters for all I/O connections, which include Analog In, Analog Out, Status Out, Control In, Ethernet/LAN, USB, RS-232, and RS-485.**

### 3.3.1.1. CONNECTING POWER

Attach the power cord to the analyzer and plug it into a power outlet capable of carrying at least 10 A current at your AC voltage and that it is equipped with a functioning earth ground.

**WARNING**
**ELECTRICAL SHOCK HAZARD**

**High Voltages are present inside the analyzer's case.**

**Power connection must have functioning ground connection.**

**Do not defeat the ground wire on power plug.**

**Turn off analyzer power before disconnecting or connecting electrical subassemblies.**

**Do not operate with cover off.**

**CAUTION**
**GENERAL SAFETY HAZARD**

**The T300/T300M Analyzer can be configured for both 100-130 V and 210-240 V at either 47 Hz or 63 Hz.**

**To avoid damage to your analyzer, make sure that the AC power voltage matches the voltage indicated on the analyzer's model/specs label (See Figure 3-4) before plugging the T300/T300M into line power.**

### 3.3.1.2. **CONNECTING ANALOG INPUTS (OPTION)**

The Analog In connector is used for connecting external voltage signals from other instrumentation (such as meteorological instruments) and for logging these signals in the analyzer's internal DAS. The input voltage range for each analog input is 0-10 VDC.

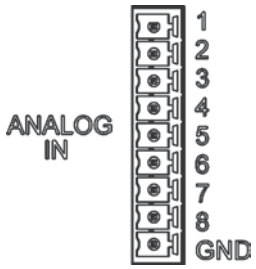


**Figure 3-8: Analog In Connector**

Pin assignments for the Analog In connector are presented in Table 3-4.

**Table 3-4: Analog Input Pin Assignments**

| PIN | DESCRIPTION | DAS PARAMETER[1] |
|---|---|---|
| 1 | Analog input # 1 | AIN 1 |
| 2 | Analog input # 2 | AIN 2 |
| 3 | Analog input # 3 | AIN 3 |
| 4 | Analog input # 4 | AIN 4 |
| 5 | Analog input # 5 | AIN 5 |
| 6 | Analog input # 6 | AIN 6 |
| 7 | Analog input # 7 | AIN 7 |
| 8 | Analog input # 8 | AIN 8 |
| GND | Analog input Ground | N/A |
| [1] See Section 7 for details on setting up the DAS. | | |

### 3.3.1.3. **CONNECTING ANALOG OUTPUTS**

The T300 is equipped with several analog output channels accessible through a connector on the back panel of the instrument. The standard configuration for these outputs is mVDC. An optional current loop output is available for each.

When the instrument is in its default configuration, channels **A1** and **A2** output a signal that is proportional to the CO concentration of the sample gas. Either can be used for connecting the analog output signal to a chart recorder or for interfacing with a datalogger.

Output **A3** is only used on the T300/T300M if the optional $CO_2$ or $O_2$ sensor is installed.

Channel **A4** is special. It can be set by the user (see Section 5.9.8.1) to output any one of the parameters accessible through the **<TST TST>** buttons of the units sample display.

To access these signals attach a strip chart recorder and/or data-logger to the appropriate analog output connections on the rear panel of the analyzer.

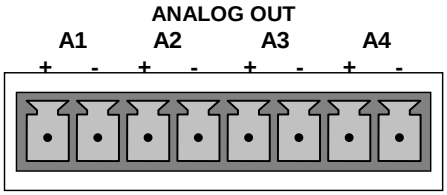


**Figure 3-9: Analog Output Connector**

**Table 3-5: Analog Output Pin-Outs**

| PIN | ANALOG OUTPUT | VOLTAGE SIGNAL | CURRENT SIGNAL |
|---|---|---|---|
| 1 | A1 | V Out | I Out + |
| 2 | | Ground | I Out - |
| 3 | A2 | V Out | I Out + |
| 4 | | Ground | I Out - |
| 5 | A3 (Only used if $CO_2$ or $O_2$ Sensor is installed) | V Out | I Out + |
| 6 | | Ground | I Out - |
| 7 | A4 | V Out | I Out + |
| 8 | | Ground | I Out - |

### 3.3.1.4. CURRENT LOOP ANALOG OUTPUTS (OPTION 41) SETUP

If your analyzer had this option installed at the factory, there are no further connections to be made. Otherwise, it can be installed as a retrofit for each of the analog outputs of the analyzer . This option converts the DC voltage analog output to a current signal with 0-20 mA output current. The outputs can be scaled to any set of limits within that 0-20 mA range. However, most current loop applications call for either 2-20 mA or 4-20 mA range.

Figure 3-10 provides installation instructions and illustrates a sample combination of one current output and two voltage outputs configuration. Following Figure 3-10 are instructions for converting current loop analog outputs to standard 0-to-5 VDC outputs. Information on calibrating or adjusting these outputs can be found in Section 5.9.3.7

**CAUTION – AVOID INVALIDATING WARRANTY**

**Servicing or handling of circuit components requires electrostatic discharge protection, i.e. ESD grounding straps, mats and containers. Failure to use ESD protection when working with electronic assemblies will void the instrument warranty. Refer to Section 14 for more information on preventing ESD damage.**

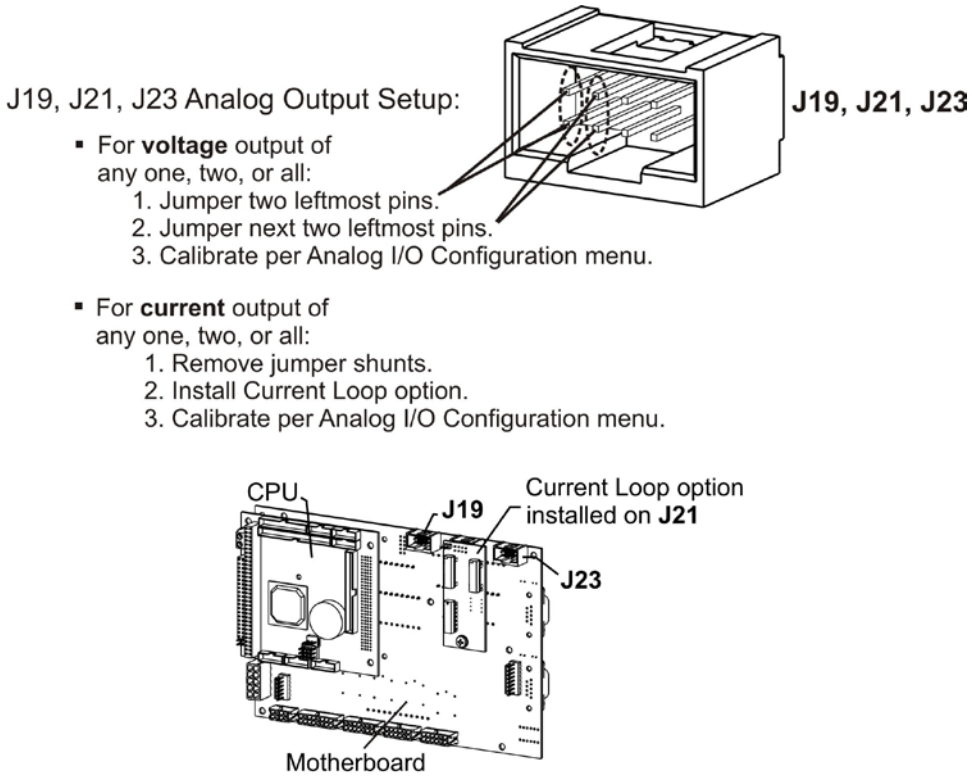


**Figure 3-10: Current Loop Option Installed on Motherboard**

### CONVERTING CURRENT LOOP ANALOG OUTPUTS TO STANDARD VOLTAGE OUTPUTS

To convert an output configured for current loop operation to the standard 0 to 5 VDC output operation:

1. Turn off power to the analyzer.
2. If a recording device was connected to the output being modified, disconnect it.
3. Remove the top cover.
   - Remove the screw located in the top, center of the front panel.
   - Remove the screws fastening the top cover to the unit (both sides).
   - Slide the cover back and lift straight up.
4. Remove the screw holding the current loop option to the motherboard.
5. Disconnect the current loop option PCA from the appropriate connector on the motherboard (see Figure 3-10).
6. Each connector, J19 and J23, requires two shunts. Place one shunt on the two left-most pins and the second shunt on the two pins next to it (see Figure 3-10).
7. Reattach the top case to the analyzer.
   - The analyzer is now ready to have a voltage-sensing, recording device attached to that output.
8. Calibrate the analog output as described in Section 5.9.3.2.

### 3.3.1.5. **CONNECTING THE STATUS OUTPUTS**

The status outputs report analyzer conditions via optically isolated NPN transistors, which sink up to 50 mA of DC current. These outputs can be used interface with devices that accept logic-level digital inputs, such as Programmable Logic Controllers (PLCs). Each status bit is an open collector output that can withstand up to 40 VDC. All of the emitters of these transistors are tied together and available at D.

**ATTENTION**

**COULD DAMAGE INSTRUMENT AND VOID WARRANTY**

**Most PLC's have internal provisions for limiting the current that the input will draw from an external device. When connecting to a unit that does not have this feature, an external dropping resistor must be used to limit the current through the transistor output to less than 50 mA. At 50 mA, the transistor will drop approximately 1.2V from its collector to emitter.**

The status outputs are accessed via a 12-pin connector on the analyzer's rear panel labeled STATUS (see Figure 3-4). Pin-outs for this connector are:

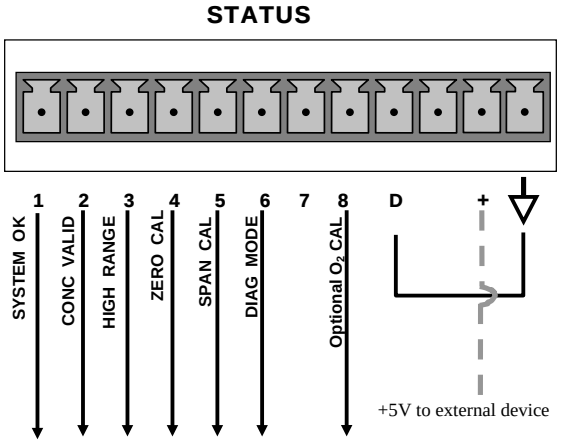


**Figure 3-11: Status Output Connector**

**Table 3-6: Status Output Signals**

| REAR PANEL LABEL | STATUS DEFINITION | CONDITION |
|---|---|---|
| 1 | SYSTEM OK | ON if no faults are present. |
| 2 | CONC VALID | OFF any time the **HOLD OFF** feature is active, such as during calibration or when other faults exist possibly invalidating the current concentration measurement (example: sample flow rate is outside of acceptable limits).<br>ON if concentration measurement is valid. |
| 3 | HIGH RANGE | ON if unit is in high range of either the **DUAL** or **AUTO** range modes. |
| 4 | ZERO CAL | ON whenever the instrument's **ZERO** point is being calibrated. |
| 5 | SPAN CAL | ON whenever the instrument's **SPAN** point is being calibrated. |
| 6 | DIAG MODE | ON whenever the instrument is in **DIAGNOSTIC** mode. |
| 7 | $CO_2$ CAL | If this analyzer is equipped with an optional $CO_2$ sensor, this Output is ON when that sensor is in calibration mode.<br>Otherwise this output is unused. |
| 8 | $O_2$ CAL | If this analyzer is equipped with an optional $O_2$ sensor, this Output is ON when that sensor is in calibration mode.<br>Otherwise this output is unused. |
| D | EMITTER BUS | The emitters of the transistors on pins 1-8 are bussed together. |
| | SPARE | |
| + | DC POWER | + 5 VDC, 300 mA source maximum. |
| ⏚ | Digital Ground | The ground level from the analyzer's internal DC power supplies. |

### 3.3.1.6. **CONNECTING THE CONTROL INPUTS**

To remotely activate the zero and span calibration modes, several digital control inputs are provided through a 10-pin connector labeled **CONTROL IN** on the analyzer's rear panel.

There are two methods for energizing the control inputs. The internal +5V available from the pin labeled "+" is the most convenient method. However, if full isolation is required, an external 5 VDC power supply should be used.

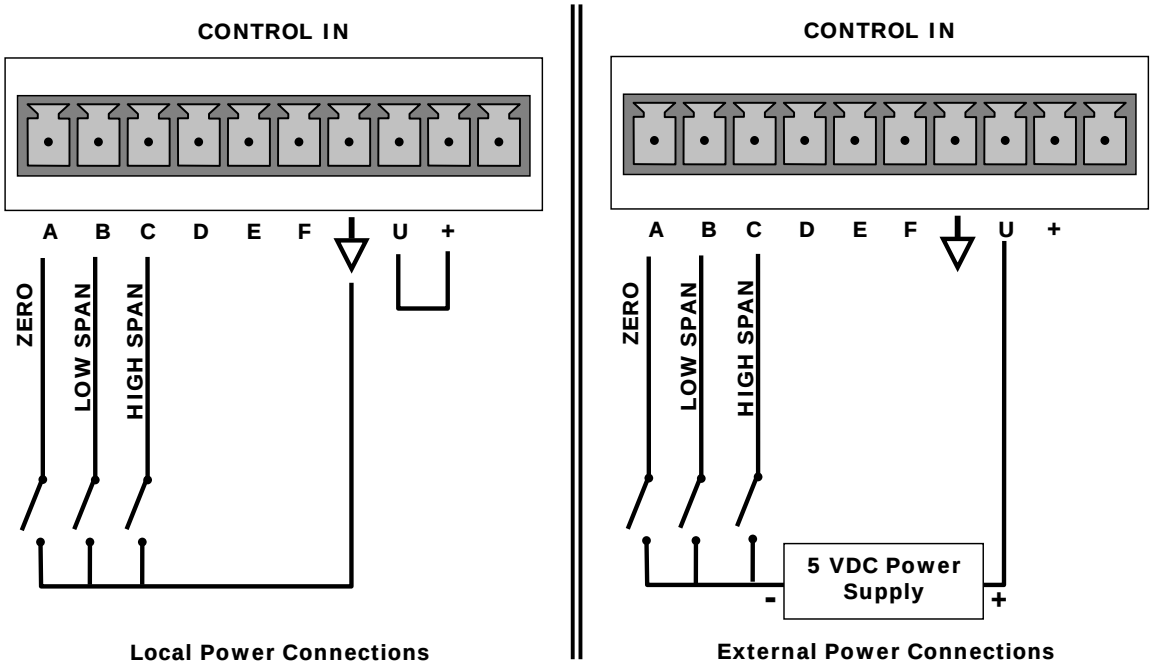


**Figure 3-12: Control Input Connector**

**Table 3-7: Control Input Signals**

| INPUT # | STATUS DEFINITION | ON CONDITION |
|---|---|---|
| A | **REMOTE ZERO CAL** | The analyzer is placed in Zero Calibration mode. The mode field of the display will read **ZERO CAL R**. |
| B | **REMOTE SPAN CAL** | The analyzer is placed in span calibration mode as part of performing a low span (midpoint) calibration. The mode field of the display will read **LO CAL R**. |
| C | **REMOTE CAL HIGH RANGE** | The analyzer is forced into high range for zero or span calibrations. This only applies when the range mode is either DUAL or AUTO. The mode field of the display will read **HI CAL R**. |
| D, E & F | SPARE | |
| ⏚ | Digital Ground | The ground level from the analyzer's internal DC power supplies (same as chassis ground). |
| U | External Power input | Input pin for +5 VDC required to activate pins A – F. |
| + | 5 VDC output | Internally generated 5V DC power. To activate inputs A – F, place a jumper between this pin and the "U" pin. The maximum amperage through this port is 300 mA (combined with the analog output supply, if used). |

### 3.3.1.7. CONNECTING THE CONCENTRATION ALARM RELAY (OPTION 61)

The concentration alarm option is comprised of four (4) "dry contact" relays on the rear panel of the instrument. This relay option is different from and in addition to the "Contact Closures" that come standard on all Teledyne API instruments. Each relay has 3 pins: Normally Open (NO), Common (C), and Normally Closed (NC).

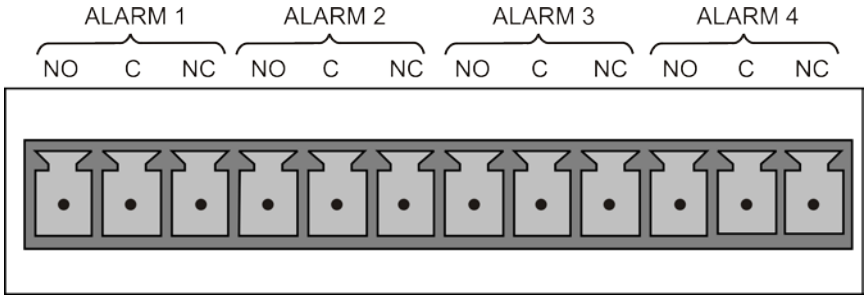


**Figure 3-13: Concentration Alarm Relay**

**Alarm 1** **"System OK 2"**

**Alarm 2** **"Conc 1"**

**Alarm 3** **"Conc 2"**

**Alarm 4** **"Range Bit"**

#### "ALARM 1" RELAY

Alarm 1 which is "System OK 2" (system OK 1, is the status bit) is in the energized state when the instrument is "OK" & there are no warnings. If there is a warning active or if the instrument is put into the "DIAG" mode, Alarm 1 will change states. This alarm has "reverse logic" meaning that if you put a meter across the Common & Normally Closed pins on the connector you will find that it is OPEN when the instrument is OK. This is so that if the instrument should turn off or lose power, it will change states and you can record this with a data logger or other recording device.

#### "ALARM 2" RELAY & "ALARM 3" RELAY

Alarm 2 relay is associated with the "Concentration Alarm 1" set point in the software; Alarm 3 Relay is associated with the "Concentration Alarm 2" set point in the software.

**Alarm 2 Relay** **CO Alarm 1 = xxx PPM**

**Alarm 3 Relay** **$CO_2$ Alarm 2 = xxx PPM**

**Alarm 2 Relay** **CO Alarm 1 = xxx PPM**

**Alarm 3 Relay** **$CO_2$ Alarm 2 = xxx PPM**

The Alarm 2 Relay will be turned on any time the concentration set-point is exceeded & will return to its normal state when the concentration value goes back below the concentration set-point.

Even though the relay on the rear panel is a NON-Latching alarm & resets when the concentration goes back below the alarm set point, the warning on the front panel of the

instrument will remain latched until it is cleared. You can clear the warning on the front panel by either pushing the CLR button on the front panel or through the serial port.

In instruments that sample more than one gas type, there could be more than one gas type triggering the Concentration 1 Alarm ("Alarm 2" Relay). For example, the T300M instrument can monitor both CO & $CO_2$ gas. The software is flexible enough to allow you to configure the alarms so that you can have 2 alarm levels for each gas.

**CO Alarm 1 = 20 PPM**

**CO Alarm 2 = 100 PPM**

**$CO_2$ Alarm 1 = 20 PPM**

**$CO_2$ Alarm 2 = 100 PPM**

In this example, CO Alarm 1 & $CO_2$ Alarm 1 will both be associated with the "Alarm 2" relay on the rear panel. This allows you do have multiple alarm levels for individual gasses.

A more likely configuration for this would be to put one gas on the "Alarm 1" relay & the other gas on the "Alarm 2" relay.

**CO Alarm 1 = 20 PPM**

**CO Alarm 2 = Disabled**

**$CO_2$ Alarm 1 = Disabled**

**$CO_2$ Alarm 2 = 100 PPM**

#### "ALARM 4" RELAY

This relay is connected to the "range bit". If the instrument is configured for "Auto Range" and the instrument goes up into the high range, it will turn this relay on.

### 3.3.1.8. CONNECTING THE COMMUNICATION INTERFACES

The T-Series analyzers are equipped with connectors for remote communications interfaces: **Ethernet**, **USB**, **RS-232**, optional **RS-232 Multidrop**, and optional **RS-485**. In addition to using the appropriate cables, each type of communication method must be configured using the SETUP>COMM menu, Section 6. Although Ethernet is DHCP-enabled by default, it can also be configured manually (Section 6.5.1) to set up a static IP address, which is the recommended setting when operating the instrument via Ethernet.

#### ETHERNET CONNECTION

For network or Internet communication with the analyzer, connect an Ethernet cable from the analyzer's rear panel Ethernet interface connector to an Ethernet access port. Please see Section 6.5 for description and setup instructions.

For manual configuration, see Section 6.5.1.

For automatic configuration (default), see Section 6.5.2.

### USB CONNECTION

For direct communication between the analyzer and a PC, connect a USB cable between the analyzer and desktop or laptop USB ports. The baud rate for the analyzer and the computer must match; you may elect to change one or the other: to view and/or change the analyzer's baud rate, see Section 6.2.2.

**Note**

**If this option is installed, the COM2 port cannot be used for anything other than Multidrop communication.**

For configuration, see 6.6.

### RS-232 CONNECTION

For **RS-232** communications with data terminal equipment (**DTE**) or with data communication equipment (**DCE**) connect either a DB9-female-to-DB9-female cable (Teledyne API part number WR000077) or a DB9-female-to-DB25-male cable (Option 60A, Section 1.4), as applicable, from the analyzer's rear panel RS-232 port to the device. Adjust the DCE-DTE switch (Figure 3-4) to select DTE or DCE as appropriate.

**Configuration**: Sections 5.7 and 6.3.

**IMPORTANT**

**IMPACT ON READINGS OR DATA**

**Cables that appear to be compatible because of matching connectors may incorporate internal wiring that makes the link inoperable. Check cables acquired from sources other than Teledyne API for pin assignments (Figure 3-14) before using.**

### RS-232 COM PORT CONNECTOR PIN-OUTS

Electronically, the difference between the DCE and DTE is the pin assignment of the Data Receive and Data Transmit functions.

- DTE devices receive data on pin 2 and transmit data on pin 3.
- DCE devices receive data on pin 3 and transmit data on pin 2.

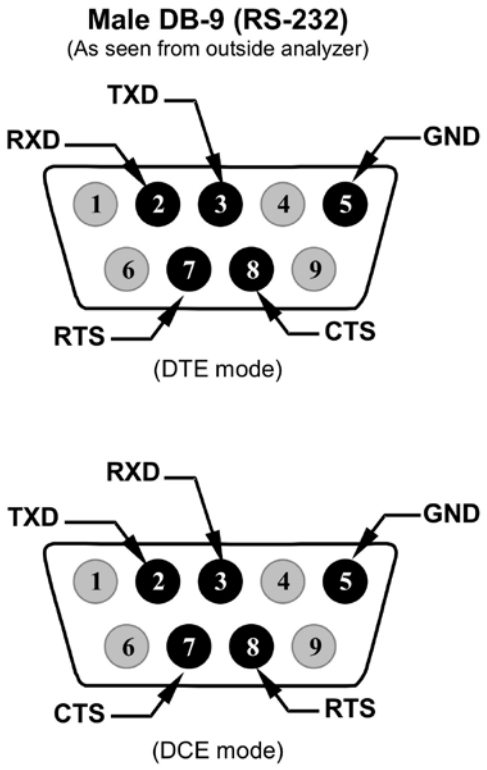


**Figure 3-14: Rear Panel Connector Pin-Outs for RS-232 Mode**

The signals from these two connectors are routed from the motherboard via a wiring harness to two 10-pin connectors on the CPU card, J11 (COM1) and J12 (COM2) (Figure 3-15).

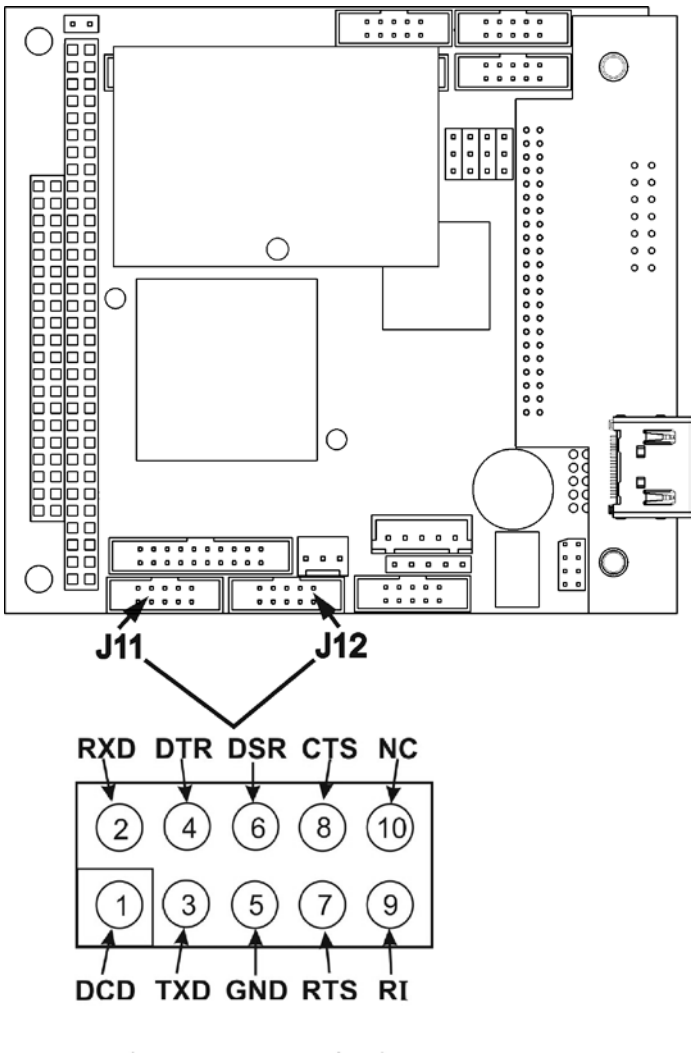


**Figure 3-15: Default Pin Assignments for CPU COM Port connector (RS-232)**

### RS-232 COM PORT DEFAULT SETTINGS

Received from the factory, the analyzer is set up to emulate a DCE or modem, with Pin 3 of the DB-9 connector designated for receiving data and Pin 2 designated for sending data.

- **RS-232 (COM1)**: RS-232 (fixed) DB-9 male connector.
  - **Baud rate**: 115200 bits per second (baud)
  - **Data Bits**: 8 data bits with 1 stop bit
  - **Parity**: None
- **COM2**: RS-232 (configurable to RS-485), DB-9 female connector.
  - **Baud rate**: 19200 bits per second (baud)
  - **Data Bits**: 8 data bits with 1 stop bit
  - **Parity**: None

### RS-232 MULTIDROP OPTION CONNECTION

When the RS-232 Multidrop option is installed, connection adjustments and configuration through the menu system are required. This section provides instructions for the internal connection adjustments, then for external connections, and ends with instructions for menu-driven configuration.

**Note**

**Because the RS-232 Multidrop option uses both the RS232 and COM2 DB9 connectors on the analyzer's rear panel to connect the chain of instruments, COM2 port is no longer available for separate RS-232 or RS-485 operation.**

**ATTENTION**

**COULD DAMAGE INSTRUMENT AND VOID WARRANTY**

**Printed Circuit Assemblies (PCAs) are sensitive to electro-static discharges too small to be felt by the human nervous system. Failure to use ESD protection when working with electronic assemblies will void the instrument warranty. Refer to Section 14 for more information on preventing ESD damage.**

In each instrument with the Multidrop option there is a shunt jumpering two pins on the serial Multidrop and LVDS printed circuit assembly (PCA), as shown in Figure 3-16. This shunt must be removed from all instruments except that designated as last in the multidrop chain, which must remain terminated. This requires powering off and opening each instrument and making the following adjustments:

1. With **NO power** to the instrument, remove its top cover and lay the rear panel open for access to the Multidrop/LVDS PCA, which is seated on the CPU.

2. On the Multidrop/LVDS PCA's JP2 connector, remove the shunt that jumpers Pins 21 ↔ 22 as indicated in. (Do this for all but the last instrument in the chain where the shunt should remain at Pins 21 ↔ 22).

3. Check that the following cable connections are made in *all* instruments (again refer to Figure 3-16):
   - J3 on the Multidrop/LVDS PCA to the CPU's COM1 connector
     (Note that the CPU's COM2 connector is not used in Multidrop)
   - J4 on the Multidrop/LVDS PCA to J12 on the motherboard
   - J1 on the Multidrop/LVDS PCS to the front panel LCD

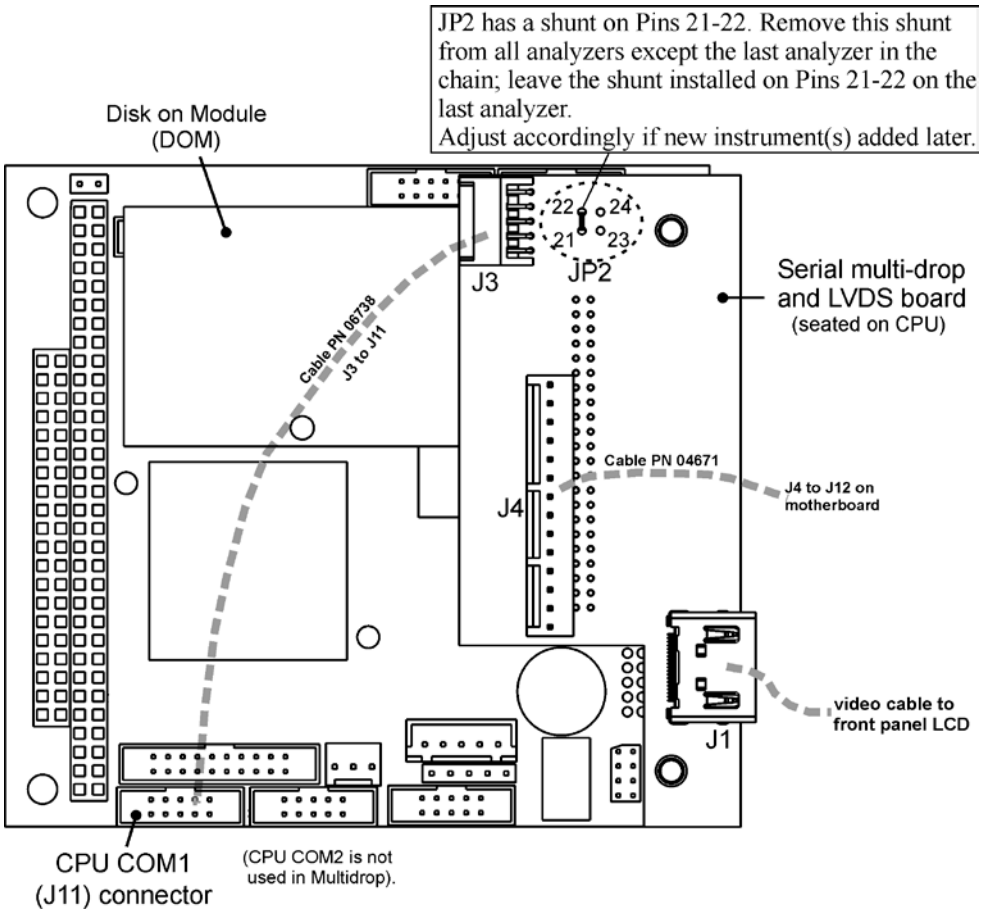


**Figure 3-16: Jumper and Cables for Multidrop Mode**

Note: If you are adding an instrument to the end of a previously configured chain, remove the shunt between Pins 21 ↔ 22 of JP2 on the Multidrop/LVDS PCA in the instrument that was previously the last instrument in the chain.

4. Close the instrument.

5. Referring to Figure 3-17 use straight-through DB9 male → DB9 female cables to interconnect the host RS232 port to the first analyzer's RS232 port; then from the first analyzer's COM2 port to the second analyzer's RS232 port; from the second analyzer's COM2 port to the third analyzer's RS232 port, etc., connecting in this fashion up to eight analyzers, subject to the distance limitations of the RS-232 standard.

6. On the rear panel of each analyzer, adjust the DCE DTE switch so that the green and the red LEDs (RX and TX) of the COM1 connector (labeled RS232) are both lit. (Ensure you are using the correct RS-232 cables internally wired specifically for RS-232 communication; see Table 1-1: Analyzer Options, "Communication Cables" and Section 3.3.1.8: Connecting the Communications Inerfaces, "RS-232 Connection").

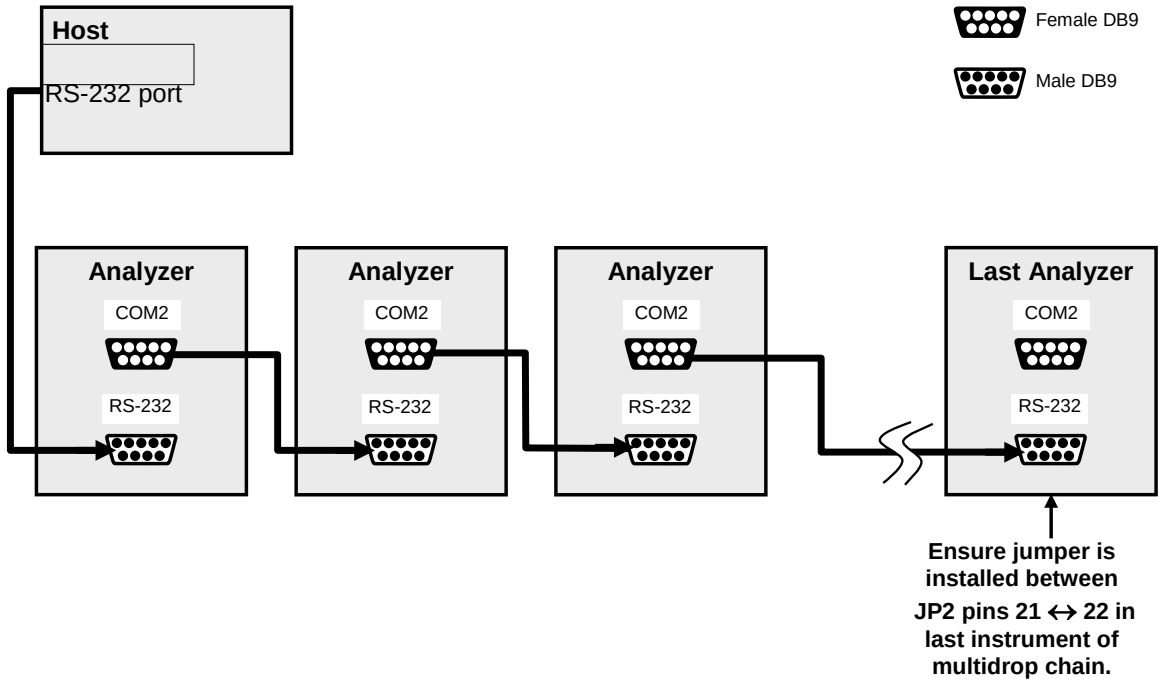


**Figure 3-17: RS-232-Multidrop PCA Host/Analyzer Interconnect Diagram**

7. BEFORE communicating from the host, power on the instruments and check that the Machine ID code is unique for each (Section 5.7.1).
   a. In the SETUP Mode menu go to SETUP>MORE>COMM>ID. The default ID is typically the model number or "0".
   b. to change the identification number, press the button below the digit to be changed.
   c. Press/select ENTER to accept the new ID for that instrument.

8. Next, in the SETUP>MORE>COMM>COM1 menu (do not use the COM2 menu for multidrop), edit the COM1 MODE parameter as follows: press/select EDIT and set only QUIET MODE, COMPUTER MODE, and MULTIDROP MODE to ON. Do not change any other settings.

9. Press/select ENTER to accept the changed settings, and ensure that COM1 MODE now shows 35.

10. Press/select SET> to go to the COM1 BAUD RATE menu and ensure it reads the same for all instruments (edit as needed so that all instruments are set at the same baud rate).

**Note**

- **The Instrument ID's should not be duplicated.**
- **The (communication) Host instrument can only address one instrument at a time.**

**Note**

**Teledyne API recommends setting up the first link, between the Host and the first analyzer, and testing it before setting up the rest of the chain.**

#### RS-485 CONNECTION

As delivered from the factory, **COM2** is configured for RS-232 communications. This port can be reconfigured for operation as a non-isolated, half-duplex RS-485 port. Using COM2 for RS-485 communication disables the USB port. To configure the instrument for RS-485 communication, please contact the factory.

## 3.3.2. PNEUMATIC CONNECTIONS

This section provides not only pneumatic connection information, but also important information about the gases required for accurate calibration; it also illustrates the pneumatic layouts for the analyzer in its basic configuration and with options.

Before making the pneumatic connections, carefully note the following cautionary and special messages:

**CAUTION**
**GENERAL SAFETY HAZARD**

**CARBON MONOXIDE (CO) IS A TOXIC GAS.**

**Do not vent calibration gas and sample gas into enclosed areas. Obtain a Material Safety Data Sheet (MSDS) for this material. Read and rigorously follow the safety guidelines described there.**

**CAUTION**
**GENERAL SAFETY HAZARD**

**Sample and calibration gases should only come into contact with PTFE (Teflon), FEP, glass, stainless steel or brass.**

**The exhaust from the analyzer's internal pump MUST be vented outside the immediate area or shelter surrounding the instrument.**

**It is important to conform to all safety requirements regarding exposure to CO.**

**ATTENTION**

**COULD DAMAGE INSTRUMENT AND VOID WARRANTY**

**Maximum Pressure:**

**Ideally the maximum pressure of any gas at the sample inlet should equal ambient atmospheric pressure and should NEVER exceed 1.5 in-hg above ambient pressure.**

**Venting Pressurized Gas:**

**In applications where any gas (span gas, zero air supply, sample gas is) received from a pressurized manifold, a vent must be provided to equalize the gas with ambient atmospheric pressure before it enters the analyzer to ensure that the gases input do not exceed the maximum inlet pressure of the analyzer, as well as to prevent back diffusion and pressure effects. These vents should be:**

- **at least 0.2m long**
- **no more than 2m long**
- **vented outside the shelter or immediate area surrounding the instrument.**

**Dust Plugs:**

**Remove dust plugs from rear panel exhaust and supply line fittings before powering on/operating instrument. These plugs should be kept for reuse in the event of future storage or shipping to prevent debris from entering the pneumatics.**

**IMPORTANT**

**Leak Check**

**Run a leak check once the appropriate pneumatic connections have been made; check all pneumatic fittings for leaks using the procedures defined in Section 11.3.3.**

See Figure 3-4 and Table 3-3 for the location and descriptions of the various pneumatic inlets/outlets referenced in this section.

### 3.3.2.1. **PNEUMATIC CONNECTIONS FOR BASIC CONFIGURATION**

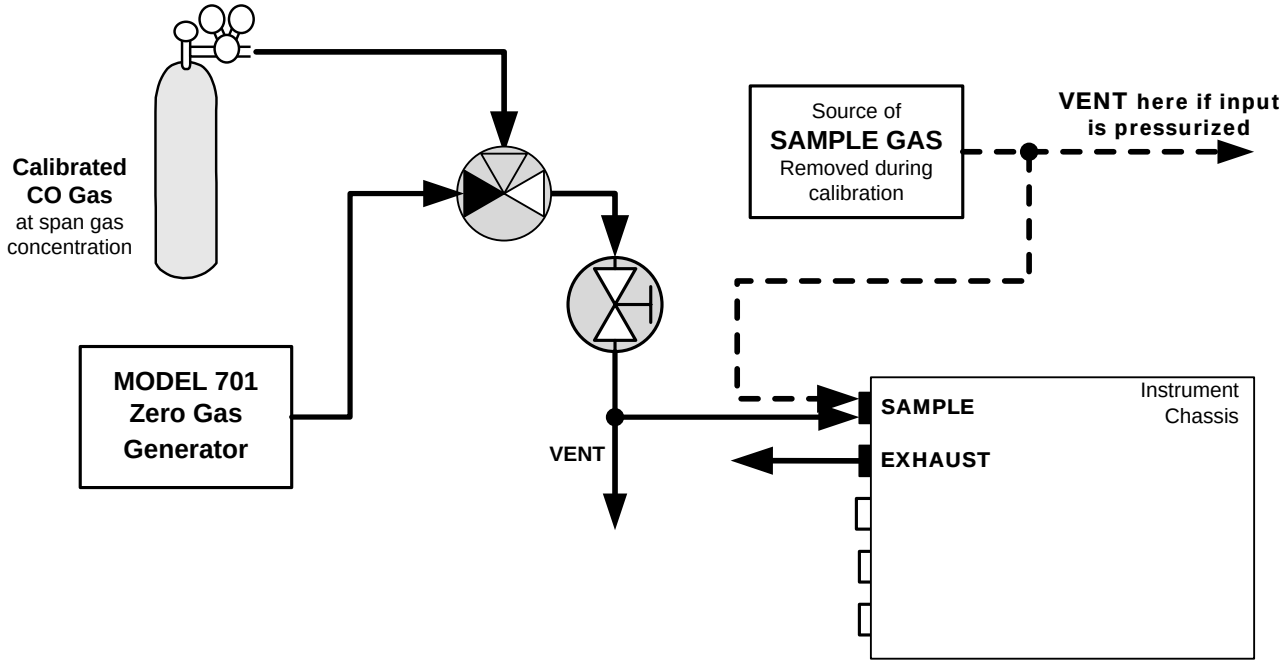


**Figure 3-18: Pneumatic Connections–Basic Configuration–Using Bottled Span Gas**

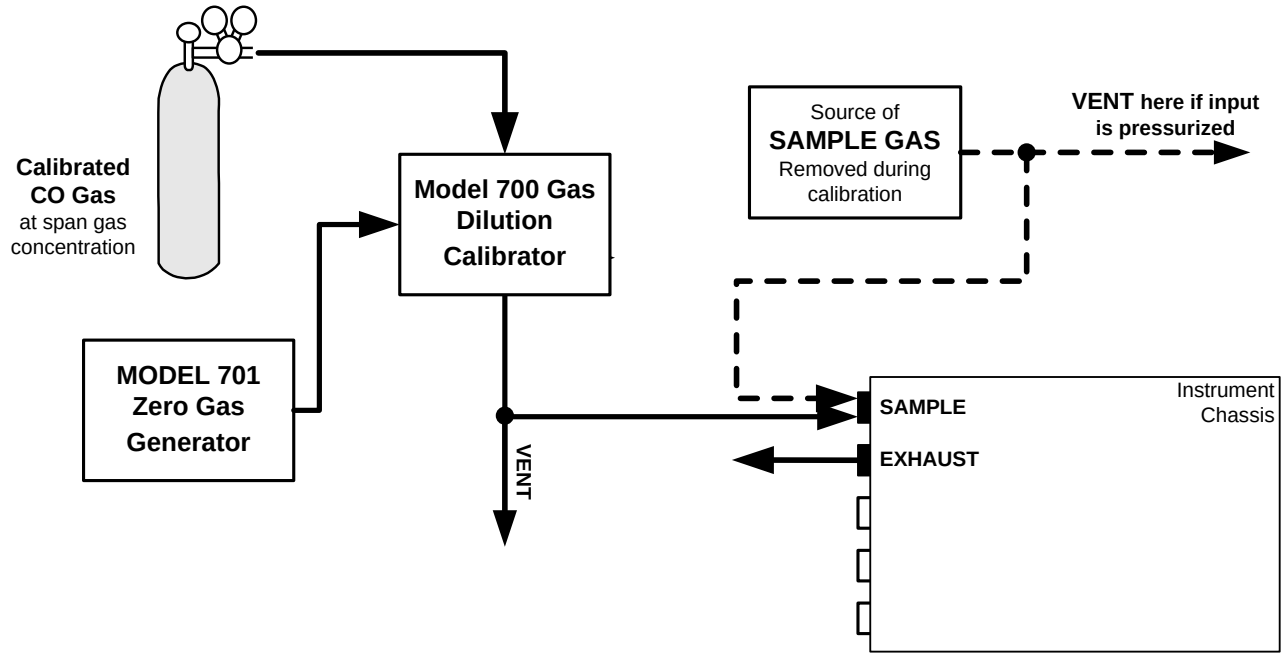


**Figure 3-19: Pneumatic Connections–Basic Configuration–Using Gas Dilution Calibrator**

### SAMPLE GAS SOURCE

Attach a sample inlet line to the **SAMPLE** inlet port. The sample input line should not be more than 2 meters long.

- Maximum pressure of any gas at the sample inlet should not exceed 1.5 in-hg above ambient pressure and ideally should equal ambient atmospheric pressure.
- In applications where the sample gas is received from a pressurized manifold, a vent must be placed on the sample gas before it enters the analyzer.

### CALIBRATION GAS SOURCES

The source of calibration gas is also attached to the **SAMPLE** inlet, but only when a calibration operation is actually being performed.

**Note**

**Zero air and span gas inlets should supply their respective gases in excess of the 800 cc3/min demand of the analyzer.**

### INPUT GAS VENTING

The span gas, zero air supply and sample gas line MUST be vented in order to ensure that the gases input do not exceed the maximum inlet pressure of the analyzer as well as to prevent back diffusion and pressure effects. These vents should be:

- At least 0.2m long;
- No more than 2m long and;
- Vented outside the shelter or immediate area surrounding the instrument.

### EXHAUST OUTLET

Attach an exhaust line to the analyzer's EXHAUST outlet fitting. The exhaust line should be:

- PTEF tubing; minimum O.D ¼";
- A maximum of 10 meters long;
- Vented outside the T300/T300M Analyzer's enclosure.

### 3.3.2.2. **PNEUMATIC LAYOUT FOR BASIC CONFIGURATION**

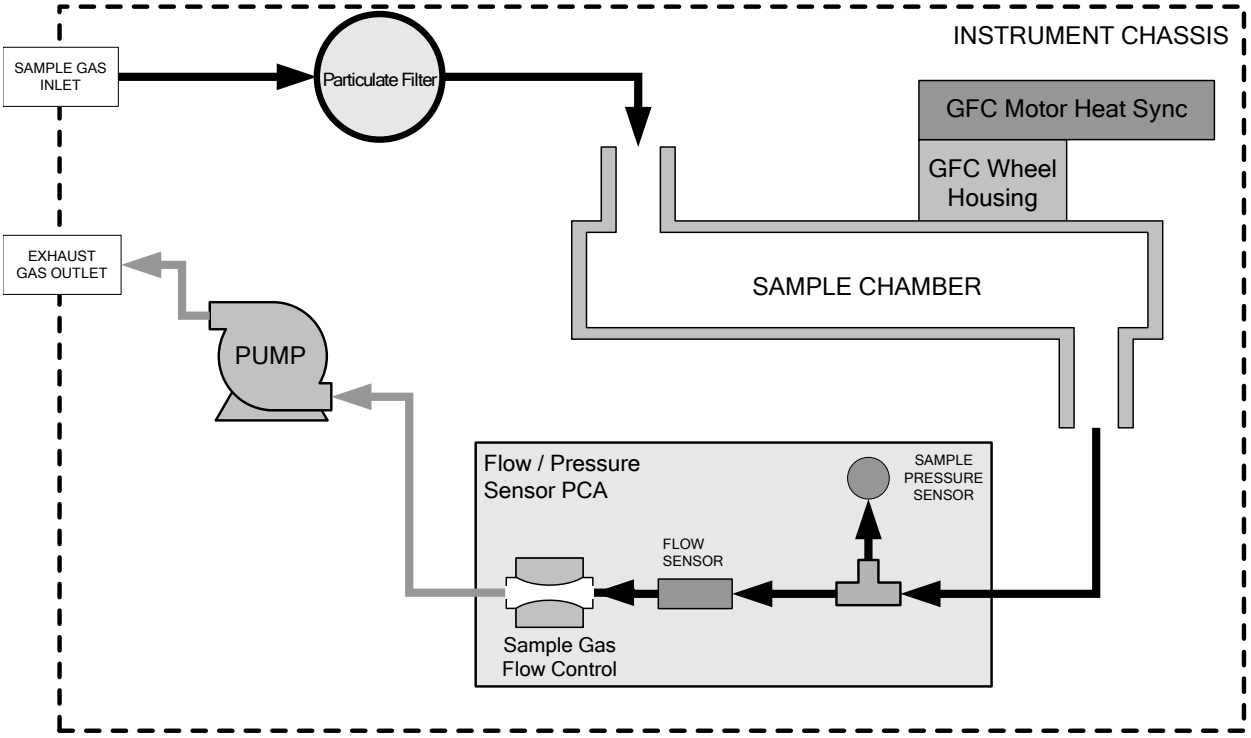


**Figure 3-20: T300/T300M Internal Gas Flow (Basic Configuration)**

### 3.3.2.3. **PNEUMATIC CONNECTIONS FOR AMBIENT ZERO/AMBIENT SPAN VALVE OPTION**

This valve option is intended for applications where:

- Zero air is supplied by a zero air generator like the Teledyne API's T701 and;
- Span gas is supplied by Gas Dilution Calibrator like the Teledyne API's T700.

Internal zero/span and sample/cal valves control the flow of gas through the instrument, but because the generator and calibrator limit the flow of zero air and span gas, no shutoff valves are required.

See Figure 3-4 for the location of gas inlets.

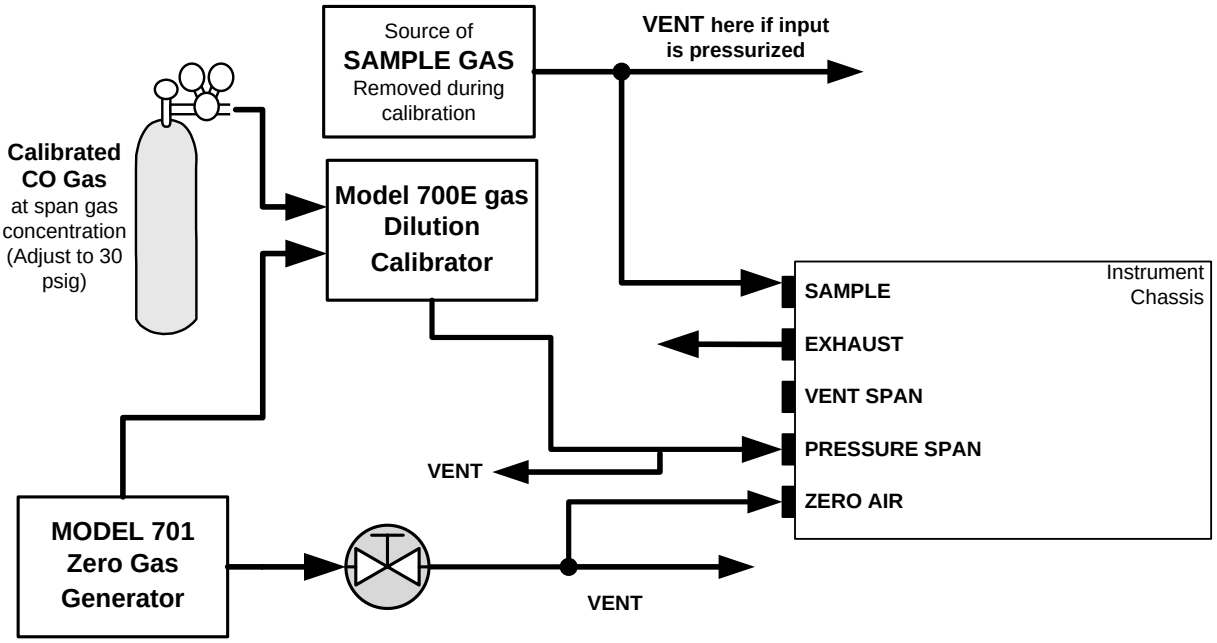


Figure 3-21: Pneumatic Connections – Option 50A: Zero/Span Calibration Valves

### SAMPLE GAS SOURCE

Attach a sample inlet line to the sample inlet port. The SAMPLE input line should not be more than 2 meters long.

- Maximum pressure of any gas at the sample inlet should not exceed 1.5 in-hg above ambient pressure and ideally should equal ambient atmospheric pressure.
- In applications where the sample gas is received from a pressurized manifold, a vent must be placed on the sample gas before it enters the analyzer.

### CALIBRATION GAS SOURCES

A vent may or may not be required when a T700-series is used with this option, depending on how the T700-series model output manifold is configured.

### SPAN GAS:

- Attach a gas line from the source of calibration gas (e.g. a Teledyne API's T700 Dynamic Dilution Calibrator) to the **SPAN** inlet at 30 psig.

### ZERO AIR:

- Zero air is supplied via a zero air generator such as a Teledyne API's T701.
- An adjustable valve is installed in the zero air supply line to regulate the gas flow.

### INPUT GAS VENTING

The zero air supply and sample gas line MUST be vented in order to ensure that the gases input do not exceed the maximum inlet pressure of the analyzer as well as to prevent back diffusion and pressure effects. These vents should be:

- At least 0.2m long;
- No more than 2m long and;

Vented outside the shelter or immediate area surrounding the instrument.

#### EXHAUST OUTLET

Attach an exhaust line to the analyzer's EXHAUST outlet fitting. The exhaust line should be:

- PTEF tubing; minimum O.D ¼";
- A maximum of 10 meters long;
- Vented outside the analyzer's enclosure.

### 3.3.2.4. PNEUMATIC LAYOUT FOR AMBIENT ZERO/AMBIENT SPAN VALVE OPTION

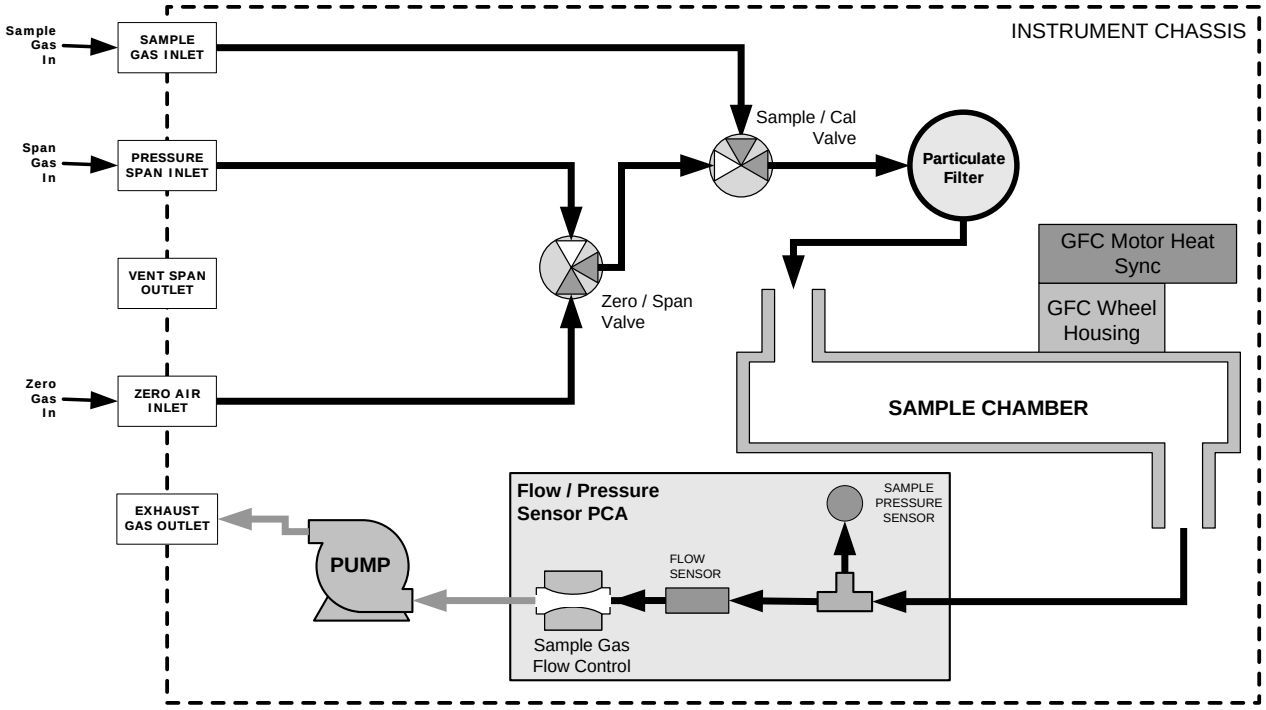


**Figure 3-22: Internal Pneumatic Flow OPT 50A – Zero/Span Valves**

**Table 3-8: Zero/Span Valve Operating States for Option 50A**

| MODE | VALVE | CONDITION |
|---|---|---|
| **SAMPLE (Normal State)** | Sample/Cal | Open to SAMPLE inlet |
| | Zero/Span | Open to IZS inlet |
| **ZERO CAL** | Sample/Cal | Open to ZERO/SPAN valve |
| | Zero/Span | Open to IZS inlet |
| **SPAN CAL** | Sample/Cal | Open to ZERO/SPAN valve |
| | Zero/Span | Open to PRESSURE SPAN inlet |

### 3.3.2.5. PNEUMATIC CONNECTIONS FOR AMBIENT ZERO/PRESSURIZED SPAN

This option requires that both zero air and span gas be supplied from external sources.

- Span gas will be supplied from a pressurized bottle of calibrated CO gas.
  - A critical flow control orifice, internal to the instrument ensures that the proper flow rate is maintained.
  - An internal vent line ensures that the gas pressure of the span gas is reduced to ambient atmospheric pressure.
  - A SHUTOFF valve preserves the span gas source when it is not in use.
- Zero gas is supplied by either an external scrubber or a zero air generator such as the Teledyne API's T701.

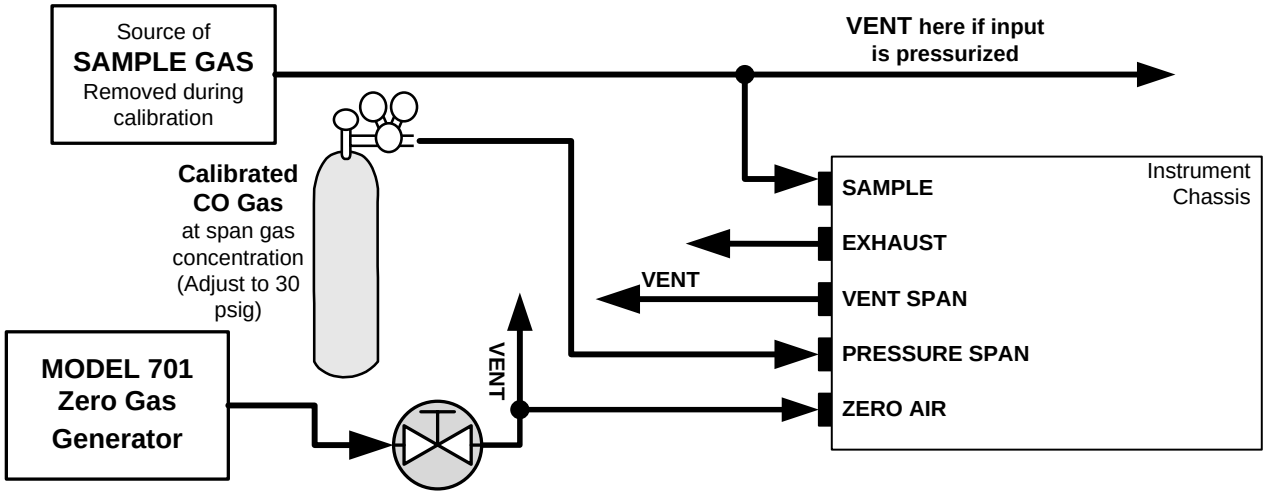


**Figure 3-23: Pneumatic Connections – Option 50B: Ambient Zero/Pressurized Span Calibration Valves**

#### SAMPLE GAS SOURCE

Attach a sample inlet line to the sample inlet port. The SAMPLE input line should not be more than 2 meters long.

- Maximum pressure of any gas at the sample inlet should not exceed 1.5 in-hg above ambient pressure and ideally should equal ambient atmospheric pressure.
- In applications where the sample gas is received from a pressurized manifold, a vent must be placed on the sample gas before it enters the analyzer.

#### CALIBRATION GAS SOURCES

### SPAN GAS

- Attach a gas line from the pressurized source of calibration gas (e.g. a bottle of nist-srm gas) to the SPAN inlet at 30 psig.

#### ZERO AIR

- Zero air is supplied via a zero air generator such as a Teledyne API's T701.
- An adjustable valve is installed in the zero air supply line to regulate the gas flow.

#### INPUT GAS VENTING

The zero air supply and sample gas line MUST be vented in order to ensure that the gases input do not exceed the maximum inlet pressure of the analyzer as well as to prevent back diffusion and pressure effects. These vents should be:

- At least 0.2m long;
- No more than 2m long and;
- Vented outside the shelter or immediate area surrounding the instrument.

A similar vent line should be connected to the VENT SPAN outlet on the back of the analyzer.

#### EXHAUST OUTLET

Attach an exhaust line to the analyzer's EXHAUST outlet fitting. The exhaust line should be:

- PTEF tubing; minimum O.D ¼";
- A maximum of 10 meters long;
- Vented outside the analyzer's enclosure.

### 3.3.2.6. PNEUMATIC LAYOUT FOR AMBIENT ZERO/PRESSURIZED SPAN OPTION

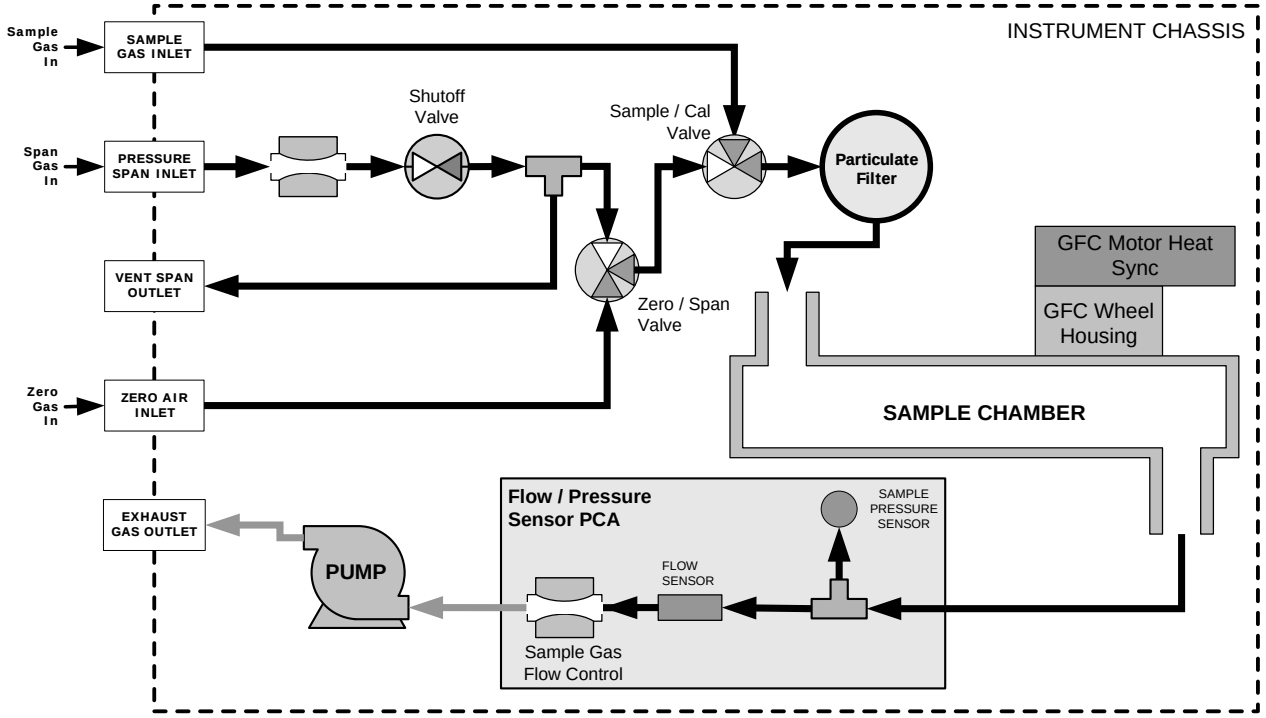


**Figure 3-24: Internal Pneumatic Flow OPT 50B – Zero/Span/Shutoff Valves**

**Table 3-9: Zero/Span Valve Operating States for Option 50B**

| MODE | VALVE | CONDITION |
|---|---|---|
| **SAMPLE (Normal State)** | Sample/Cal | Open to SAMPLE inlet |
| | Zero/Span | Open to IZS inlet |
| | Shutoff Valve | Closed |
| **ZERO CAL** | Sample/Cal | Open to ZERO/SPAN valve |
| | Zero/Span | Open to IZS inlet |
| | Shutoff Valve | Closed |
| **SPAN CAL** | Sample/Cal | Open to ZERO/SPAN valve |
| | Zero/Span | Open to SHUTOFF valve |
| | Shutoff Valve | Open to PRESSURE SPAN Inlet |

### 3.3.2.7. **PNEUMATIC CONNECTIONS FOR ZERO SCRUBBER/PRESSURIZED SPAN OPTION**

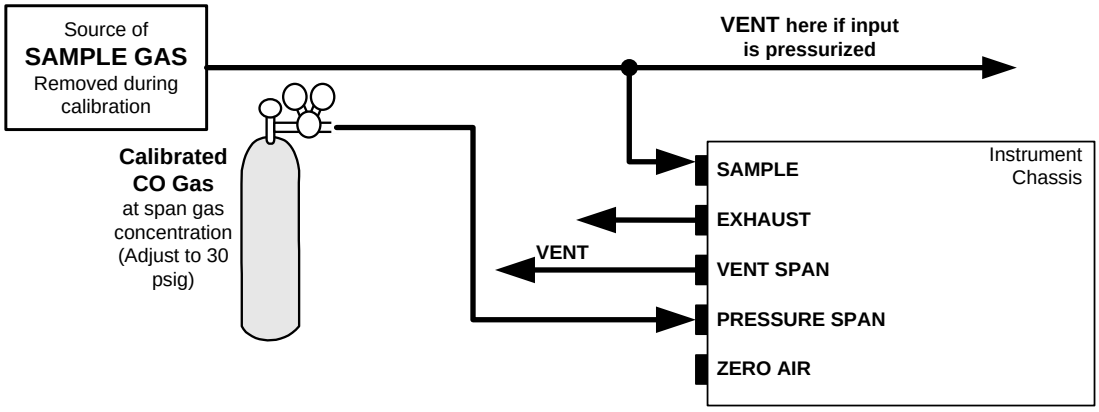


**Figure 3-25: Pneumatic Connections – Zero Scrubber/Pressurized Span Calibration Valves (Opt 50E)**

#### SAMPLE GAS SOURCE

Attach a sample inlet line to the sample inlet port. The SAMPLE input line should not be more than 2 meters long.

- Maximum pressure of any gas at the sample inlet should not exceed 1.5 in-hg above ambient pressure and ideally should equal ambient atmospheric pressure.
- In applications where the sample gas is received from a pressurized manifold, a vent must be placed on the sample gas before it enters the analyzer.

#### CALIBRATION GAS SOURCES

#### SPAN GAS:

- Attach a gas line from the pressurized source of calibration gas (e.g. a bottle of NIST-SRM gas) to the span inlet.
- Span gas can by generated by a T700 Dynamic Dilution Calibrator.

#### ZERO AIR:

- Zero air is supplied internally via a zero air scrubber that draws ambient air through the ZERO AIR inlet.

#### INPUT GAS VENTING

The zero air supply and sample gas line MUST be vented in order to ensure that the gases input do not exceed the maximum inlet pressure of the analyzer as well as to prevent back diffusion and pressure effects. These vents should be:

- At least 0.2m long;
- No more than 2m long and;
- Vented outside the shelter or immediate area surrounding the instrument.

A similar vent line should be connected to the VENT SPAN outlet on the back of the analyzer.

### EXHAUST OUTLET

Attach an exhaust line to the analyzer's EXHAUST outlet fitting. The exhaust line should be:

- PTEF tubing; minimum O.D ¼";
- A maximum of 10 meters long;
- Vented outside the analyzer's enclosure.

## 3.3.2.8. PNEUMATIC LAYOUT FOR ZERO SCRUBBER/PRESSURIZED SPAN OPTION

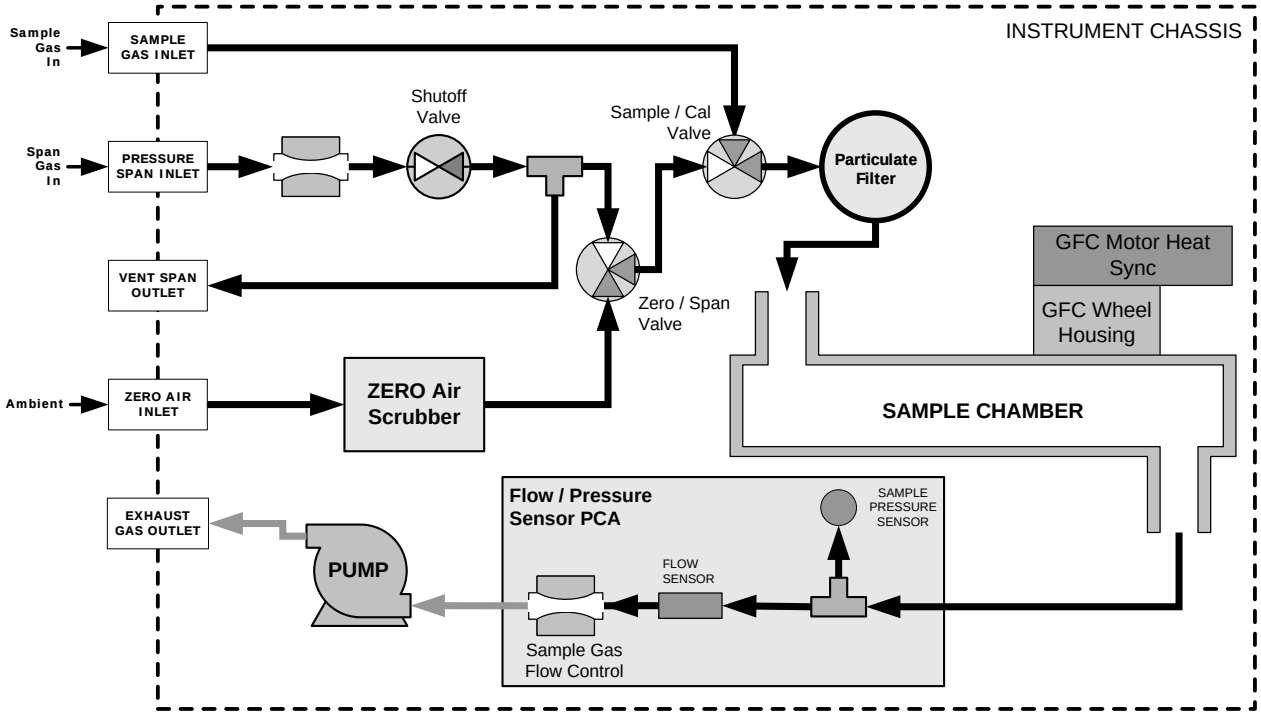


**Figure 3-26: Internal Pneumatic Flow OPT 50E – Zero Scrubber/Pressurized Span**

**Table 3-10: Zero/Span Valve Operating States for Option 51E**

| Mode | Valve | Condition |
|---|---|---|
| **SAMPLE (Normal State)** | Sample/Cal | Open to SAMPLE inlet |
| | Zero/Span | Open to internal ZERO AIR scrubber |
| | Shutoff Valve | Closed |
| **ZERO CAL** | Sample/Cal | Open to zero/span valve |
| | Zero/Span | Open to internal ZERO AIR scrubber |
| | Shutoff Valve | Closed |
| **SPAN CAL** | Sample/Cal | Open to ZERO/SPAN valve |
| | Zero/Span | Open to SHUTOFF valve |
| | Shutoff Valve | Open to PRESSURE SPAN inlet |

### 3.3.2.9. **PNEUMATIC CONNECTIONS FOR ZERO SCRUBBER/AMBIENT SPAN OPTION**

Option 50H is operationally and pneumatically similar to Option 50A described earlier, except that the zero air is generated by an internal zero air scrubber. This means that the IZS inlet can simply be left open to ambient air.

Internal zero/span and sample/cal valves control the flow of gas through the instrument, but because the generator and calibrator limit the flow of zero air and span gas no shutoff valves are required.

See Figure 3-4 for the location of gas inlets and outlets and span gas no shutoff valves are required.

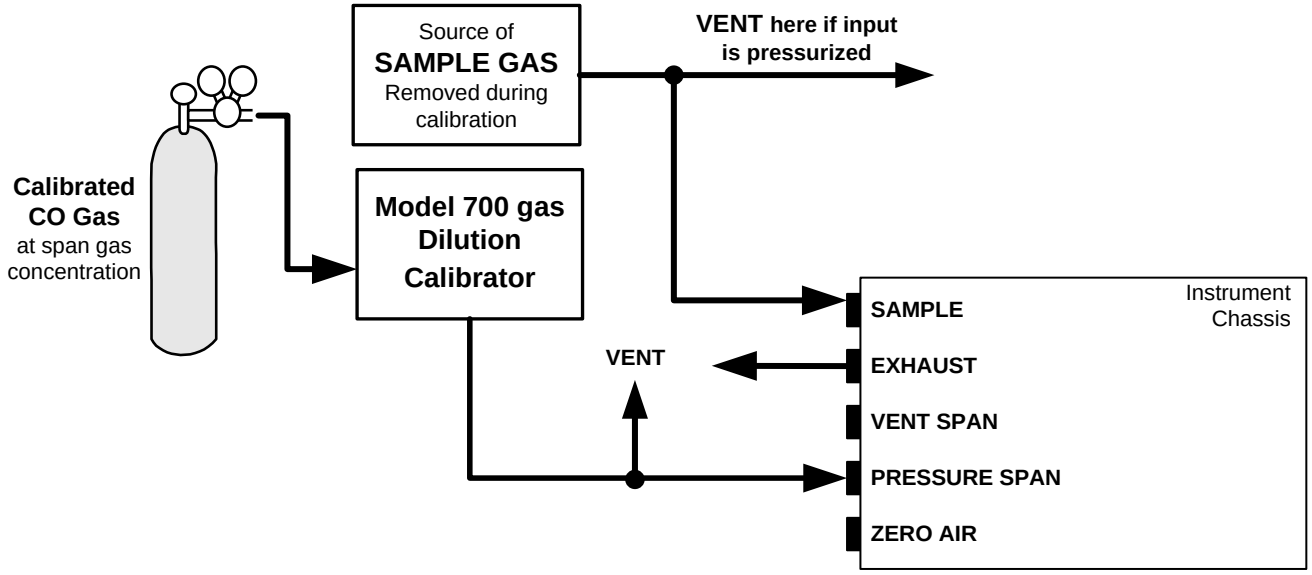


**Figure 3-27: Pneumatic Connections – Option 50H: Zero/Span Calibration Valves**

#### SAMPLE GAS SOURCE

Attach a sample inlet line to the sample inlet port. The SAMPLE input line should not be more than 2 meters long.

- Maximum pressure of any gas at the sample inlet should not exceed 1.5 in-Hg above ambient pressure and ideally should equal ambient atmospheric pressure.
- In applications where the sample gas is received from a pressurized manifold, a vent must be placed on the sample gas before it enters the analyzer.

### CALIBRATION GAS SOURCES

#### SPAN GAS

- Attach a gas line from the source of calibration gas (e.g. a Teledyne API's T700E Dynamic Dilution Calibrator) to the **SPAN** inlet.

#### ZERO AIR

- Zero air is supplied internally via a zero air scrubber that draws ambient air through the IZS inlet.

#### INPUT GAS VENTING

The zero air supply and sample gas line MUST be vented in order to ensure that the gases input do not exceed the maximum inlet pressure of the analyzer as well as to prevent back diffusion and pressure effects. These vents should be:

- At least 0.2m long;
- No more than 2m long and;
- Vented outside the shelter or immediate area surrounding the instrument.

#### EXHAUST OUTLET

Attach an exhaust line to the analyzer's EXHAUST outlet fitting. The exhaust line should be:

- PTEF tubing; minimum O.D ¼";
- A maximum of 10 meters long;
- Vented outside the analyzer's enclosure.

### 3.3.2.10. **PNEUMATIC LAYOUT FOR ZERO SCRUBBER/ AMBIENT SPAN OPTION**

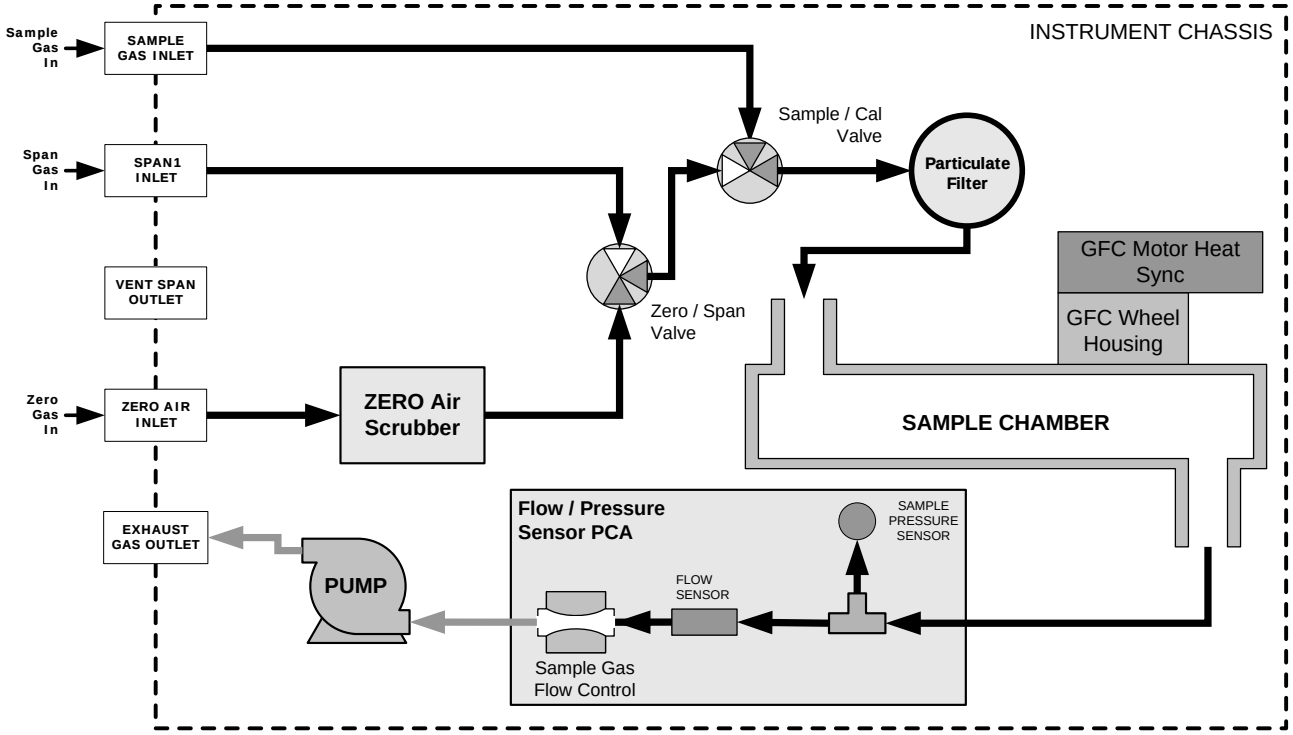


**Figure 3-28: Internal Pneumatic Flow OPT 50H – Zero Scrubber/Ambient Span**

**Table 3-11: Zero/Span Valve Operating States for Option 50H**

| MODE | VALVE | CONDITION |
|---|---|---|
| **SAMPLE (Normal State)** | Sample/Cal | Open to SAMPLE inlet |
| | Zero/Span | Open to ZERO AIR scrubber |
| **ZERO CAL** | Sample/Cal | Open to ZERO/SPAN valve |
| | Zero/Span | Open to ZERO AIR scrubber |
| **SPAN CAL** | Sample/Cal | Open to ZERO/SPAN valve |
| | Zero/Span | Open to PRESSURE SPAN inlet |

### 3.3.2.11. **CALIBRATION GASES**

Zero air and span gas are required for accurate calibration.

#### ZERO AIR

Zero air is a gas that is similar in chemical composition to the earth's atmosphere but scrubbed of all components that might affect the analyzer's readings, in this case CO and water vapor. If your analyzer is equipped with an Internal Zero Span (IZS) or an external zero air scrubber option, it is capable of creating zero air.

If the analyzer is NOT equipped with the optional $CO_2$ sensor, zero air should be scrubbed of $CO_2$ as well, as this gas can also have an interfering effect on CO measurements.

For analyzers without an IZS or external zero air scrubber option, a zero air generator such as the Teledyne API Model T701 can be used.

### SPAN GAS

Span gas is a gas specifically mixed to match the chemical composition of the type of gas being measured at near full scale of the desired measurement range. In the case of CO measurements made with the T300 or T300M Analyzer, it is recommended that you use a span gas with a CO concentration equal to 80-90% of the measurement range for your application.

EXAMPLE: If the application is to measure between 0 ppm and 500 ppb, an appropriate span gas concentration would be 400-450 ppb CO in N2.

Cylinders of calibrated CO gas traceable to NIST-Standard Reference Material specifications (also referred to as SRMs or EPA protocol calibration gases) are commercially available. Table 3-12 lists specific NIST-SRM reference numbers for various concentrations of CO.

**Table 3-12: NIST-SRM's Available for Traceability of CO Calibration Gases**

| NIST-SRM | TYPE | NOMINAL CONCENTRATION |
|---|---|---|
| 1680b | CO in $N_2$ | 500 ppm |
| 1681b | CO in $N_2$ | 1000 ppm |
| 2613a | CO in Zero Air | 20 ppm |
| 2614a | CO in Zero Air | 45 ppm |
| 2659a[1] | $O_2$ in $N_2$ | 21% by weight |
| 2626a | $CO_2$ in $N_2$ | 4% by weight |
| 2745* | $CO_2$ in $N_2$ | 16% by weight |

[1] Used to calibrate optional $O_2$ sensor.
[2] Used to calibrate optional $CO_2$ sensor.

### SPAN GAS FOR MULTIPOINT CALIBRATION

Some applications, such as EPA monitoring, require a multipoint calibration procedure where span gases of different concentrations are needed. We recommend using a bottle of calibrated CO gas of higher concentration in conjunction with a gas dilution calibrator such as a Teledyne API's T700. This type of calibrator precisely mixes a high concentration gas with zero air (both supplied externally) to accurately produce span gas of the correct concentration. Linearity profiles can be automated with this model and run unattended over night.

# 3.4. STARTUP, FUNCTIONAL CHECKS, AND INITIAL CALIBRATION

**IMPORTANT**

**IMPACT ON READINGS OR DATA**

**The analyzer's cover must be installed to ensure that the temperatures of the GFC Wheel and absorption cell assemblies are properly controlled.**

If you are unfamiliar with the T300/T300M theory of operation, we recommend that you read Section 13. For information on navigating the analyzer's software menus, see the menu trees described in Appendix A.

## 3.4.1. STARTUP

After the electrical and pneumatic connections are made, an initial functional check is in order. Turn on the instrument. The pump and exhaust fan should start immediately. The display will briefly show a momentary splash screen of the Teledyne API logo and other information during the initialization process while the CPU loads the operating system, the firmware and the configuration data at the start of initialization.

The analyzer should automatically switch to Sample Mode after completing the boot-up sequence and start monitoring CO gas. However, there is an approximately one hour warm-up period before reliable gas measurements can be taken. During the warm-up period, the front panel display may show messages in the Parameters field.

## 3.4.2. WARNING MESSAGES

Because internal temperatures and other conditions may be outside the specified limits during the analyzer's warm-up period, the software will suppress most warning conditions for 30 minutes after power up. If warning messages persist after the 60 minutes warm-up period is over, investigate their cause using the troubleshooting guidelines in Section 12.

To view and clear warning messages, press:

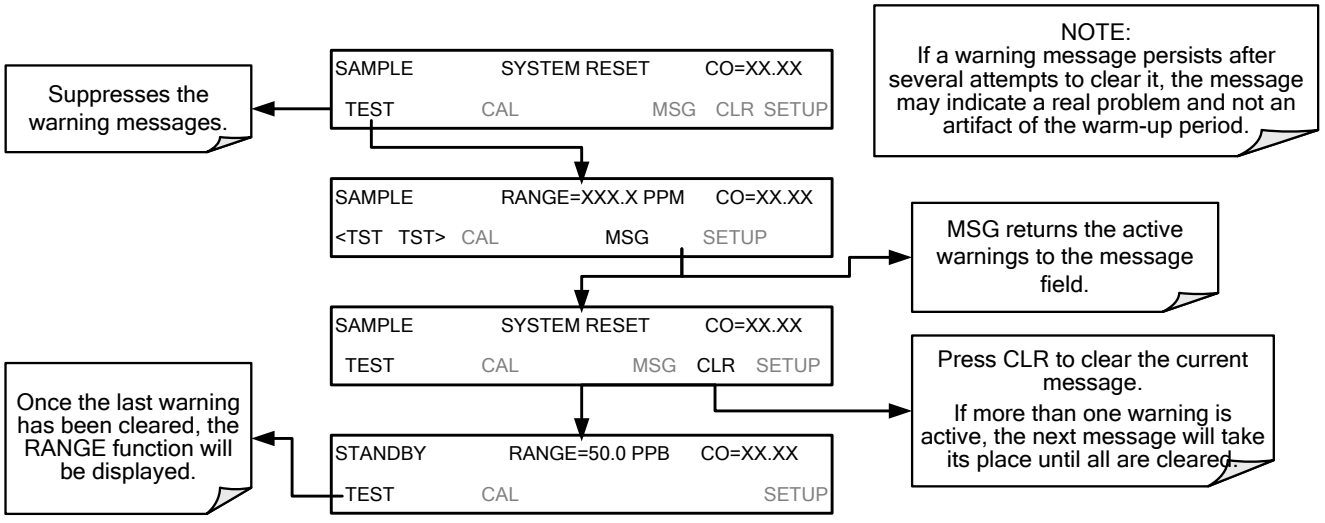

Table 3-13 lists brief descriptions of the warning messages that may occur during start up.

**Table 3-13: Possible Warning Messages at Start-Up**

| Message | MEANING |
|---|---|
| **ANALOG CAL WARNING** | The instrument's A/D circuitry or one of its analog outputs is not calibrated. |
| **BENCH TEMP WARNING** | Optical bench temperature is outside the specified limits. |
| **BOX TEMP WARNING** | The temperature inside the T300/T300M chassis is outside the specified limits. |
| **CANNOT DYN SPAN**[2] | Remote span calibration failed while the dynamic span feature was set to turned on. |
| **CANNOT DYN ZERO**[3] | Remote zero calibration failed while the dynamic zero feature was set to turned on. |
| **CONFIG INITIALIZED** | Configuration was reset to factory defaults or was erased. |
| **DATA INITIALIZED** | DAS data storage was erased. |
| **PHOTO TEMP WARNING** | Photometer temperature outside of warning limits specified by PHOTO_TEMP_SET variable. |
| **REAR BOARD NOT DET** | Motherboard was not detected during power up. |
| **RELAY BOARD WARN** | CPU is unable to communicate with the relay PCA. |
| **SAMPLE FLOW WARN** | The flow rate of the sample gas is outside the specified limits. |
| **SAMPLE PRESS WARN** | Sample pressure outside of operational parameters. |
| **SAMPLE TEMP WARN** | The temperature of the sample gas is outside the specified limits. |
| **SOURCE WARNING** | The IR source may be faulty. |
| **SYSTEM RESET**[1] | The computer was rebooted. |
| **WHEEL TEMP WARNING** | The Gas Filter Correlation Wheel temperature is outside the specified limits. |

[1] **Typically clears 45 minutes after power up.**
[2] **Clears the next time successful zero calibration is performed.**
[3] **Clears the next time successful span calibration is performed.**

Table 3-14 lists brief descriptions of the warning messages that may occur during start up for T300 analyzers with optional second gas options or alarms installed.

**Table 3-14: Possible Startup Warning Messages – T300 Analyzers with Options**

| Message | Meaning |
|---|---|
| **O2 CELL TEMP WARN**[1] | $O_2$ sensor cell temperature outside of warning limits specified by *O2_CELL_SET* variable. |
| **IZS TEMP WARNING**[2] | On units with IZS options installed: The permeation tube temperature is outside of specified limits. |
| **O2 ALARM 1 WARN**[1, 4] | $O_2$ Alarm limit #1 has been triggered.[4] |
| **O2 ALARM 2 WARN**[1, 4] | $O_2$ Alarm limit #2 has been triggered.[4] |
| **CO2 ALARM 1 WARN**[3, 4] | $CO_2$ Alarm limit #1 has been triggered.[4] |
| **CO2 ALARM 2 WARN**[3, 4] | $CO_2$ Alarm limit #2 has been triggered.[4] |
| **SO2 ALARM1 WARN**[4] | $SO_2$ Alarm limit #1 has been triggered.[4] |
| **SO2 ALARM2 WARN**[4] | $SO_2$ Alarm limit #2 has been triggered.[4] |

[1] Only appears when the optional $O_2$ sensor is installed.
[2] Only appears when the optional internal zero span (IZS) option is installed.
[3] Only appears when the optional $CO_2$ sensor is installed.
[4] Only Appears when the optional gas concentration alarms are installed

## 3.4.3. FUNCTIONAL CHECKS

After the analyzer's components have warmed up for at least 60 minutes, verify that the software properly supports any hardware options that were installed: navigate through the analyzer's software menus, see the menu trees described in Appendix A.

Then check to make sure that the analyzer is functioning within allowable operating parameters:

- Appendix C includes a list of test functions viewable from the analyzer's front panel as well as their expected values.
- These functions are also useful tools for diagnosing performance problems with your analyzer (see Section 12.1.2).
- The enclosed Final Test and Validation Data Sheet (P/N 04271) lists these values as they were before the instrument left the factory.

To view the current values of these parameters press the following control button sequence on the analyzer's front panel. Remember that until the unit has completed its warm-up these parameters may not have stabilized.

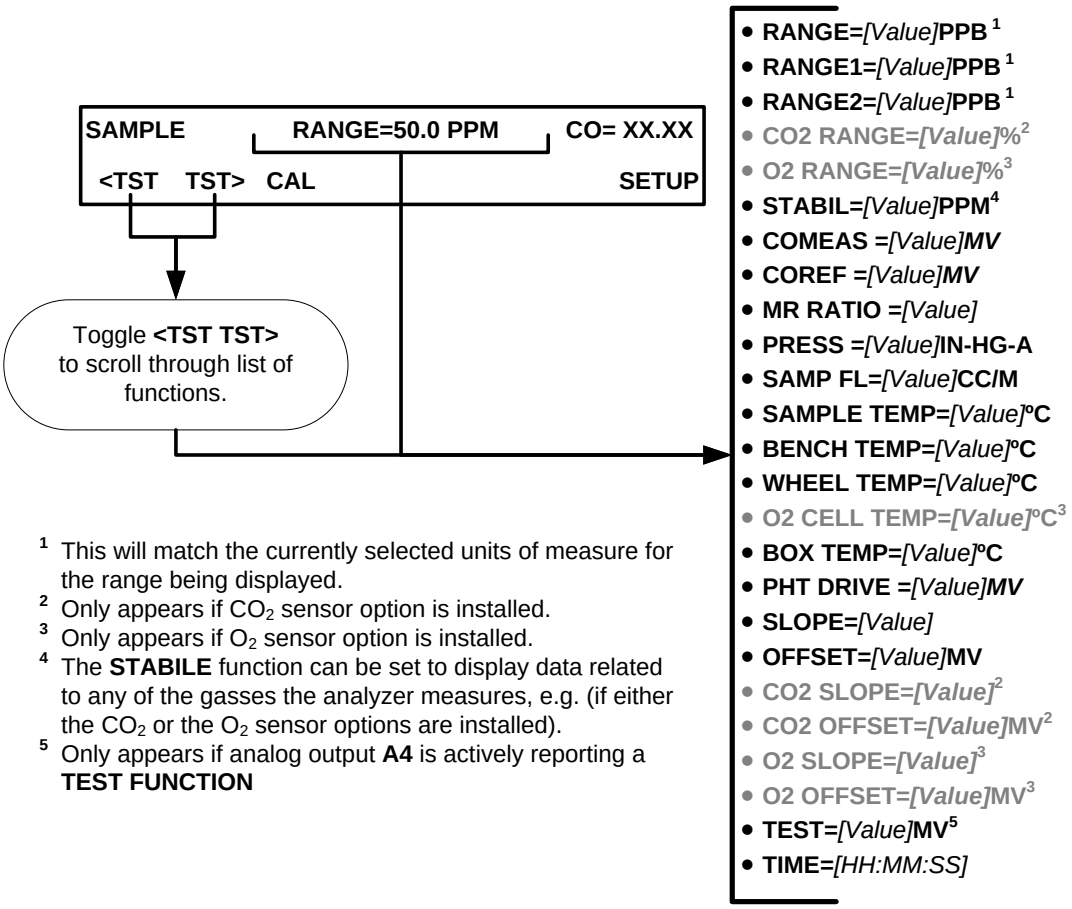


[1] This will match the currently selected units of measure for the range being displayed.
[2] Only appears if $CO_2$ sensor option is installed.
[3] Only appears if $O_2$ sensor option is installed.
[4] The **STABILE** function can be set to display data related to any of the gasses the analyzer measures, e.g. (if either the $CO_2$ or the $O_2$ sensor options are installed).
[5] Only appears if analog output **A4** is actively reporting a **TEST FUNCTION**

## 3.4.4. INITIAL CALIBRATION

To perform the following calibration you must have sources for zero air and span gas available for input into the sample port on the back of the analyzer. See Section 3.3.2 for instructions for connecting these gas sources.

The initial calibration should be carried out using the same reporting range set up as used during the analyzer's factory calibration. This will allow you to compare your calibration results to the factory calibration as listed on the *Final Test and Validation Data Sheet*.

If both available DAS parameters for a specific gas type are being reported via the instruments analog outputs e.g. **CONC1** and **CONC2** when the **DUAL** range mode is activated, separate calibrations should be carried out for each parameter.

- Use the **LOW** button when calibrating for **CONC1** (equivalent to **RANGE1**).
- Use the **HIGH** button when calibrating for **CONC2** (equivalent to **RANGE2**).

**NOTE** **The following procedure assumes that the instrument does not have any of the available Valve Options installed. See Section 9.3 for instructions for calibrating instruments that have valve options.**

### 3.4.4.1. **INTERFERENTS FOR CO MEASUREMENTS**

It should be noted that the gas filter correlation method for detecting CO is subject to interference from a number of other gases that absorb IR in a similar fashion to CO. Most notable of these are water vapor, $CO_2$, $N_2O$ (nitrous oxide) and $CH_4$ (methane). The T300/T300M has been successfully tested for its ability to reject interference from of these sources, however high concentrations of these gases can interfere with the instrument's ability to make low-level CO measurements.

For a more detailed discussion of this topic, see Section 13.2.1.3.

### 3.4.4.2. **INITIAL CALIBRATION PROCEDURE**

The following procedure assumes that:

- The instrument DOES NOT have any of the available calibration valve or gas inlet options installed;
- Cal gas will be supplied through the SAMPLE gas inlet on the back of the analyzer (see Figure 3-4)
- The pneumatic setup matches that described in Section 3.3.2.1.

#### VERIFYING THE T300/T300M REPORTING RANGE SETTINGS

While it is possible to perform the following procedure with any range setting we recommend that you perform this initial checkout using following reporting range settings:

- Unit of Measure: PPM
- Analog Output Reporting Range: 50 ppm
- Mode Setting: SNGL

While these are the default setting for the T300/T300M Analyzer, it is recommended that you verify them before proceeding with the calibration procedure, by pressing:

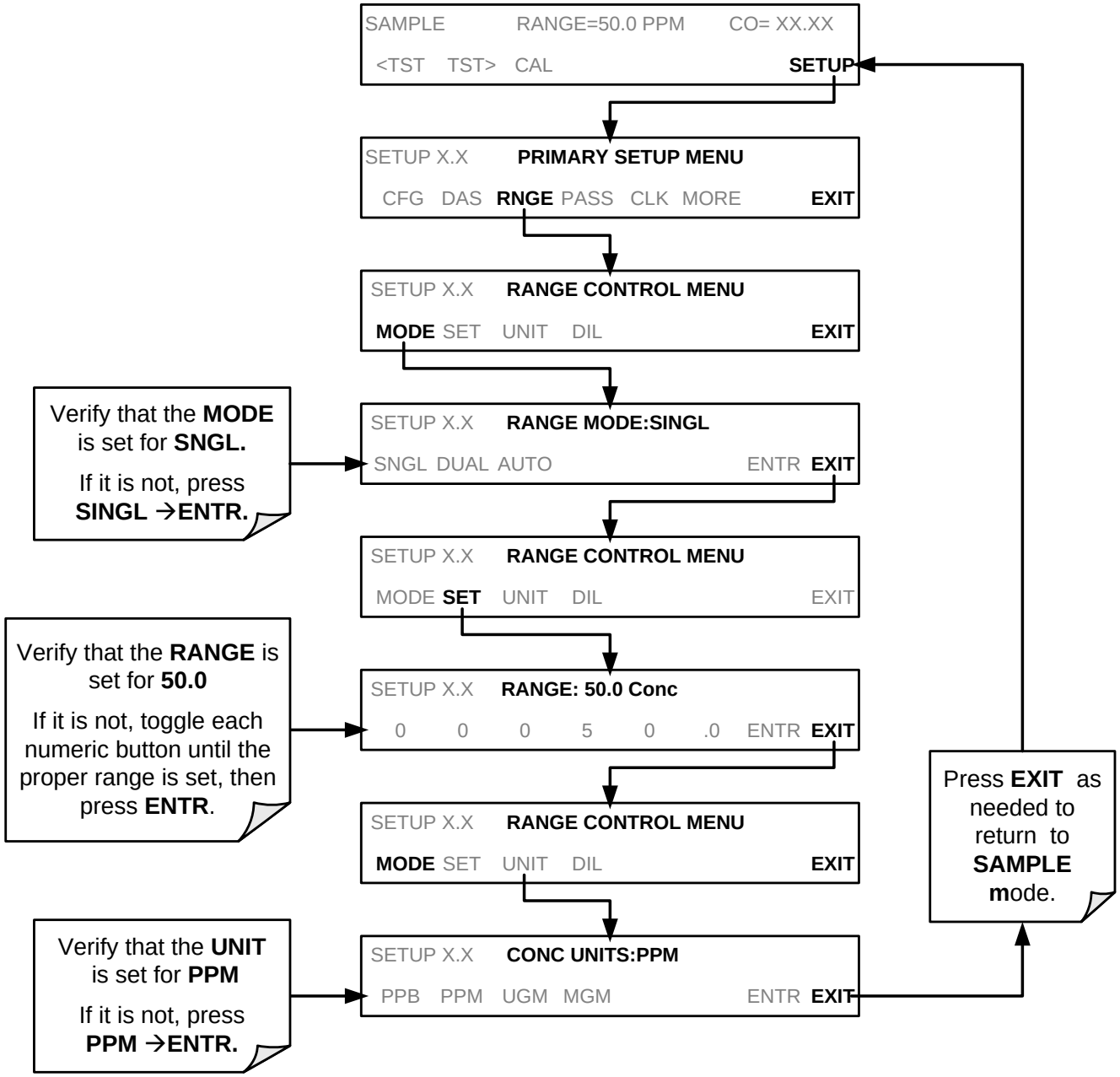

### DILUTION RATIO SET UP

If the dilution ratio option is enabled on your T300/T300M Analyzer and your application involves diluting the sample gas before it enters the analyzer, set the dilution ratio as follows:

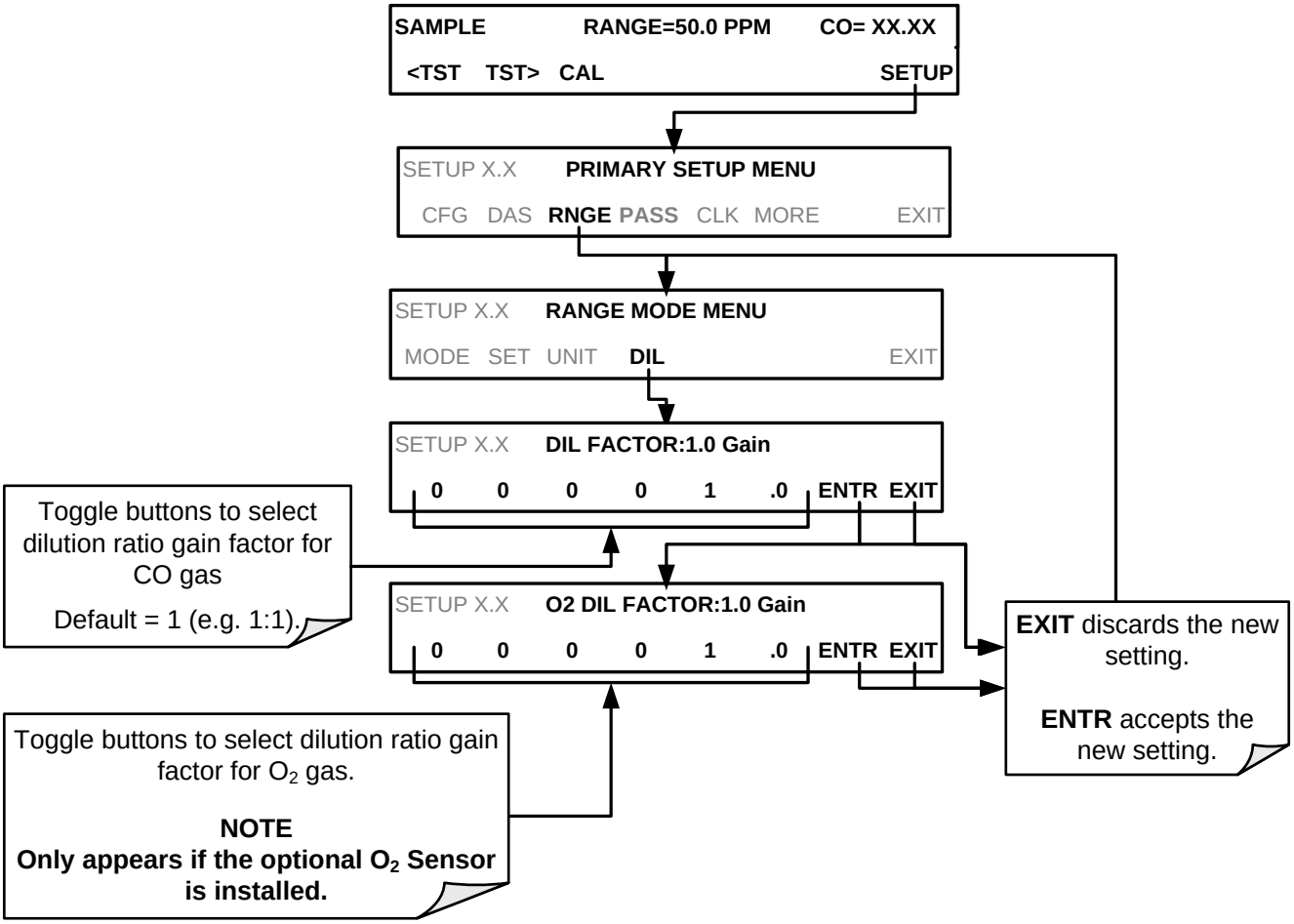

### SET CO SPAN GAS CONCENTRATION

Set the expected CO pan gas concentration. This should be 80-90% of range of concentration range for which the analyzer's analog output range is set.

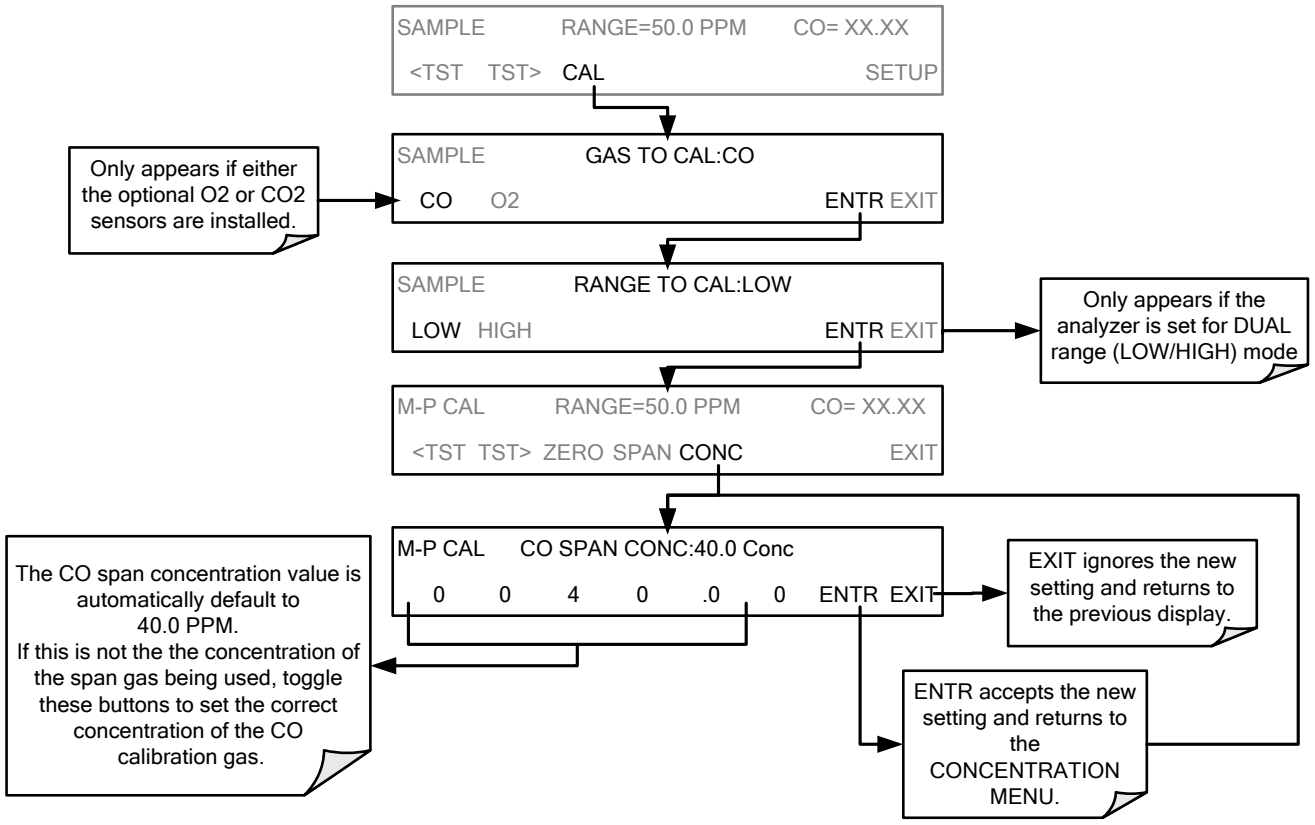

### ZERO/SPAN CALIBRATION

To perform the zero/span calibration procedure, press:

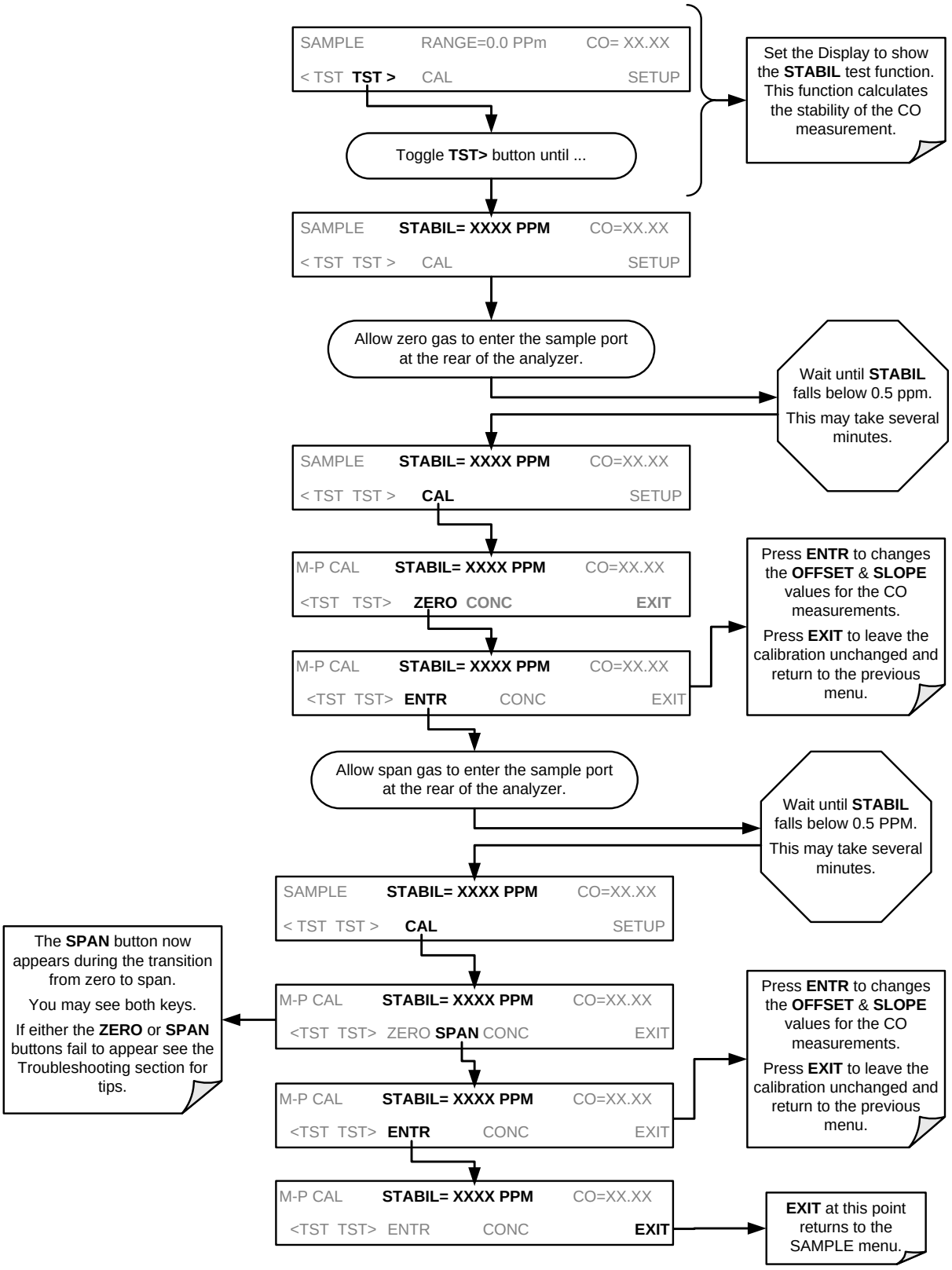


**Figure 3-29: Zero/Span Calibration Procedure**

#### 3.4.4.3. **O2 SENSOR CALIBRATION PROCEDURE**

If your T300/T300M is equipped with the optional $O_2$ sensor, this sensor should be calibrated during installation of the instrument. See Section 9.7.1 for instructions.

#### 3.4.4.4. **CO2 SENSOR CALIBRATION PROCEDURE**

If your T300/T300M is equipped with the optional $CO_2$ sensor, this sensor should be calibrated during installation of the instrument. See Section 9.7.2 for instructions.

**Note** **Once you have completed the above set-up procedures, please fill out the Quality Questionnaire that was shipped with your unit and return it to Teledyne API. This information is vital to our efforts in continuously improving our service and our products. THANK YOU.**

This page intentionally left blank.

# PART II

# OPERATING INSTRUCTIONS

# 4. OVERVIEW OF OPERATING MODES

To assist in navigating the analyzer's software, a series of menu trees can be found in Appendix A of this manual.

**Note**

**Some control buttons on the touch screen do not appear if they are not applicable to the menu that you're in, the task that you are performing, the command you are attempting to send, or to incorrect settings input by the user. For example, the ENTR button may disappear if you input a setting that is invalid or out of the allowable range for that parameter, such as trying to set the 24-hour clock to 25:00:00. Once you adjust the setting to an allowable value, the ENTR button will re-appear.**

The T300/T300M software has a variety of operating modes. Most commonly, the analyzer will be operating in **Sample Mode**. In this mode a continuous read-out of the CO concentration can be viewed on the front panel and output as an analog voltage from rear panel terminals, calibrations can be performed and TEST functions and WARNING messages can be examined. If the analyzer is configured to measure a second gas (e.g. CO along with $O_2$ or $CO_2$) the display will show a readout of both concentrations.

The second most important operating mode is SETUP mode. This mode is used for performing certain configuration operations, such as for the DAS system, the reporting ranges, or the serial (RS 232 / RS 485 / Ethernet) communication channels. The SETUP mode is also used for performing various diagnostic tests during troubleshooting.

**Figure 4-1: Front Panel Display**

The mode field of the front panel display indicates to the user which operating mode the unit is currently running.

Besides **SAMPLE** and **SETUP**, other modes the analyzer can be operated in are:

**Table 4-1: Analyzer Operating Modes**

| MODE | EXPLANATION |
|---|---|
| **DIAG** | One of the analyzer's diagnostic modes is active (refer to Section 5.9). |
| **LO CAL A** | Unit is performing LOW SPAN (midpoint) calibration initiated automatically by the analyzer's AUTOCAL feature |
| **LO CAL R** | Unit is performing LOW SPAN (midpoint) calibration initiated remotely through the COM ports or digital control inputs. |
| **M-P CAL** | This is the basic calibration mode of the instrument and is activated by pressing the CAL button. |
| **SAMPLE** | Sampling normally, flashing text indicates adaptive filter is on. |
| **SAMPLE A** | Indicates that unit is in SAMPLE mode and AUTOCAL feature is activated. |
| **SETUP X.#**[2] | SETUP mode is being used to configure the analyzer. The gas measurement will continue during this process. |
| **SPAN CAL A**[1] | Unit is performing SPAN calibration initiated automatically by the analyzer's AUTOCAL feature |
| **SPAN CAL M**[1] | Unit is performing SPAN calibration initiated manually by the user. |
| **SPAN CAL R**[1] | Unit is performing SPAN calibration initiated remotely through the COM ports or digital control inputs. |
| **ZERO CAL A**[1] | Unit is performing ZERO calibration procedure initiated automatically by the AUTOCAL feature |
| **ZERO CAL M**[1] | Unit is performing ZERO calibration procedure initiated manually by the user. |
| **ZERO CAL R**[1] | Unit is performing ZERO calibration procedure initiated remotely through the COM ports or digital control inputs. |

[1] Only Appears on units with Z/S valve or IZS options.
[2] The revision of the analyzer firmware is displayed following the word SETUP, e.g., SETUP G.3.

# 4.1. SAMPLE MODE

This is the analyzer's standard operating mode. In this mode the instrument is analyzing the gas in the sample chamber, calculating CO concentration and reporting this information to the user via the front panel display, the analog outputs and, if set up properly, the RS-232/RS-485/Ethernet/USB ports.

## 4.1.1. TEST FUNCTIONS

A series of **TEST** functions is available for viewing at the front panel whenever the analyzer is at the **SAMPLE** mode. These parameters provide information about the present operating status of the instrument and are useful during troubleshooting (refer to Section 12.1.2). They can also be recorded in one of the DAS channels (refer to Section 7.2) for data analysis. To view the test functions, press one of the <TST TST> buttons repeatedly in either direction.

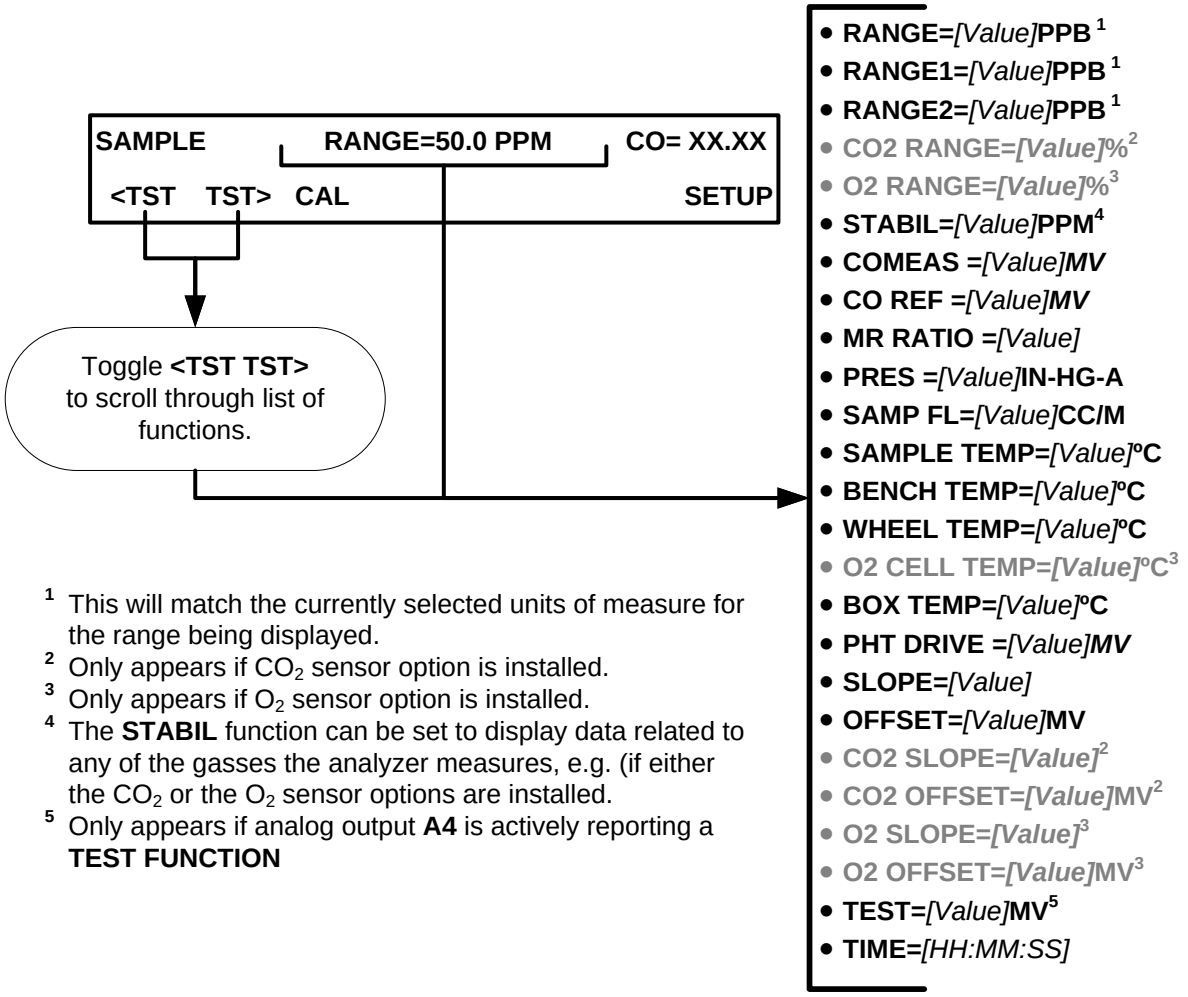


[1] This will match the currently selected units of measure for the range being displayed.
[2] Only appears if $CO_2$ sensor option is installed.
[3] Only appears if $O_2$ sensor option is installed.
[4] The **STABIL** function can be set to display data related to any of the gasses the analyzer measures, e.g. (if either the $CO_2$ or the $O_2$ sensor options are installed.
[5] Only appears if analog output **A4** is actively reporting a **TEST FUNCTION**

**Figure 4-2: Viewing T300/T300M Test Functions**

**IMPORTANT**

**IMPACT ON READING OR DATA**

**A value of "XXXX" displayed for any of the TEST functions indicates an out-of-range reading or the analyzer's inability to calculate it. All pressure measurements are represented in terms of absolute pressure. Absolute, atmospheric pressure is 29.92 in-Hg-A at sea level. It decreases about 1 in-Hg per 300 m gain in altitude. A variety of factors such as air conditioning and passing storms can cause changes in the absolute atmospheric pressure.**

**Table 4-2: Test Functions Defined**

| PARAMETER | DISPLAY TITLE | UNITS | MEANING |
|---|---|---|---|
| Stability | **STABIL** | PPB[3], PPM UGM[3], MGM | Standard deviation of CO concentration readings. Data points are recorded every ten seconds using the last 25 data points. This function can be reset to show $O_2$ or $CO_2$ stability in instruments with those sensor options installed. |
| Range | **RANGE RANGE1[1] RANGE2[1]** | PPB, PPM, UGM, MGM | The full scale limit at which the reporting range of the analyzer is currently set. THIS IS NOT the Physical Range of the instrument. See Section 5.4.1 for more information. |
| $O_2$ Range [1] | $O_2$ **RANGE** | % | The range setting for the optional $O_2$ Sensor. |
| $CO_2$ Range[2] | $CO_2$ **RANGE** | % | The range setting for the optional $CO_2$ Sensor. |
| CO Measure | **CO MEAS** | MV | The demodulated, peak IR detector output during the measure portion of the GFC Wheel cycle. |
| CO Reference | **CO REF** | MV | The demodulated, peak IR detector output during the reference portion of the GFC Wheel cycle. |
| Measurement / Reference Ratio | **MR Ratio** | - | The result of **CO MEAS** divided by **CO REF**. This ratio is the primary value used to compute CO concentration. The value displayed is not linearized. |
| Sample Pressure | **PRES** | In-Hg-A | The absolute pressure of the Sample gas as measured by a pressure sensor located inside the sample chamber. |
| Sample Flow | **SAMPLE FL** | $cm^3$/min | Sample mass flow rate as measured by the flow rate sensor in the sample gas stream. |
| Sample Temperature | **SAMP TEMP** | °C | The temperature of the gas inside the sample chamber. |
| Bench Temperature | **BENCH TEMP** | °C | Optical bench temperature. |
| Wheel Temperature | **WHEEL TEMP** | °C | GFC Wheel temperature. |
| Box Temperature | **BOX TEMP** | °C | The temperature inside the analyzer chassis. |
| $O_2$ Cell Temperature[1] | $O_2$ **CELL TEMP**[3] | °C | The current temperature of the $O_2$ sensor measurement cell. |
| Photo-detector Temp. Control Voltage | **PHT DRIVE** | mV | The drive voltage being supplied to the thermoelectric coolers of the IR photo-detector by the sync/demod Board. |
| Slope | **SLOPE** | - | The sensitivity of the instrument as calculated during the last calibration activity. |
| Offset | **OFFSET** | - | The overall offset of the instrument as calculated during the last calibration activity. |
| $O_2$ Sensor Slope [1] | $O_2$ **SLOPE** | - | $O_2$ slope, computed during zero/span calibration. |
| $O_2$ Sensor Offset [1] | $O_2$ **OFFSET** | - | $O_2$ offset, computed during zero/span calibration. |
| $CO_2$ Sensor Slope[2] | $CO_2$ **SLOPE** | - | $CO_2$ slope, computed during zero/span calibration. |
| $CO_2$ Sensor Offset [2] | $CO_2$ **OFFSET** | - | $CO_2$ offset, computed during zero/span calibration. |
| Current Time | **TIME** | - | The current time. This is used to create a time stamp on DAS readings, and by the **AUTOCAL** feature to trigger calibration events. |

[1] Only appears when the optional $O_2$ sensor is installed.
[2] Only appears when the optional $CO_2$ sensor is installed.
[3] Only available on the T300.

## 4.1.2. **WARNING MESSAGES**

The most common instrument failures will be reported as a warning on the analyzer's front panel and through the **COMM** ports. Section 12.1.1 explains how to use these messages to troubleshoot problems. Section 4.1.2 shows how to view and clear warning messages.

**Table 4-3: List of Warning Messages**

| MESSAGE | MEANING |
|---|---|
| **ANALOG CAL WARNING** | The instrument's A/D circuitry or one of its analog outputs is not calibrated. |
| **BENCH TEMP WARNING** | The temperature of the optical bench is outside the specified limits. |
| **BOX TEMP WARNING** | The temperature inside the chassis is outside the specified limits. |
| **CANNOT DYN SPAN**[2] | Remote span calibration failed while the dynamic span feature was set to turned on. |
| **CANNOT DYN ZERO**[3] | Remote zero calibration failed while the dynamic zero feature was set to turned on. |
| **CONC ALRM1 WARNING**[1] | Concentration alarm 1 is enabled and the measured CO level is ≥ the set point. |
| **CONC ALRM2 WARNING**[1] | Concentration alarm 2 is enabled and the measured CO level is ≥ the set point. |
| **CONFIG INITIALIZED** | Configuration storage was reset to factory configuration or erased. |
| **DATA INITIALIZED** | DAS data storage was erased. |
| **$O_2$ CELL TEMP WARN**[2] | $O_2$ sensor cell temperature outside of warning limits. |
| **PHOTO TEMP WARNING** | The temperature of the IR photo detector is outside the specified limits. |
| **REAR BOARD NOT DET** | The CPU is unable to communicate with the motherboard. |
| **RELAY BOARD WARN** | The firmware is unable to communicate with the relay board. |
| **SAMPLE FLOW WARN** | The flow rate of the sample gas is outside the specified limits. |
| **SAMPLE PRESS WARN** | Sample gas pressure outside of operational parameters. |
| **SAMPLE TEMP WARN** | The temperature of the sample gas is outside the specified limits. |
| **SOURCE WARNING** | The IR source may be faulty. |
| **SYSTEM RESET**[1] | The computer was rebooted. |
| **WHEEL TEMP WARNING** | The Gas Filter Correlation Wheel temperature is outside the specified limits. |

[1] Alarm warnings only present when 0ptional alarm package is activated.
[2] Only enabled when the optional $O_2$ Sensor is installed.

To view and clear warning messages:

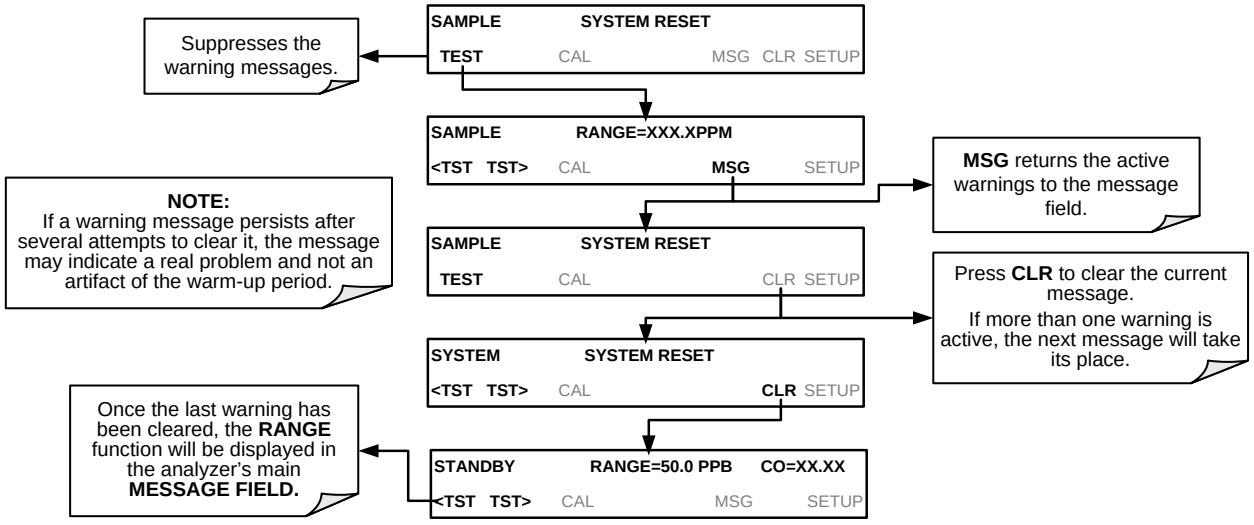


**Figure 4-3: Viewing and Clearing T300/T300M WARNING Messages**

# 4.2. CALIBRATION MODE

Pressing the CAL button switches the T300/T300M into calibration mode. In this mode the user can calibrate the instrument with the use of calibrated zero or span gases. This mode is also used to check the current calibration status of the instrument.

- For more information about setting up and performing standard calibration operations or checks, see Section 9.
- For more information about setting up and performing EPA equivalent calibrations, see Section 10.

If the instrument includes one of the available zero/span valve options, the **SAMPLE** mode display will also include **CALZ** and **CALS** buttons. Pressing either of these buttons also puts the instrument into calibration mode.

- The **CALZ** button is used to initiate a calibration of the analyzer's zero point using internally generated zero air.
- The **CALS** button is used to calibrate the span point of the analyzer's current reporting range using span gas.

For more information concerning calibration valve options, see Table 1-1.

For information on using the automatic calibration feature (**ACAL**) in conjunction with the one of the calibration valve options, see Section 9.4.

**IMPORTANT**

**IMPACT ON READINGS OR DATA**

**It is recommended that this span calibration be performed at 80-90% of full scale of the analyzer's currently selected reporting range. EXAMPLES: If the reporting range is set for 0 to 50 ppm, an appropriate span point would be 40-45 ppm. If the of the reporting range is set for 0 to 1000 ppb, an appropriate span point would be 800-900 ppb.**

# 4.3. SETUP MODE

The **SETUP** mode contains a variety of choices that are used to configure the analyzer's hardware and software features, perform diagnostic procedures, gather information on the instrument's performance, and configure or access data from the internal data acquisition system (DAS). For a visual representation of the software menu trees, refer to Appendix A.

Setup Mode is divided between Primary and Secondary Setup menus and can be protected through password security.

## 4.3.1. PASSWORD SECURITY

Setup Mode can be protected by password security through the SETUP>PASS menu (Section 5.5) to prevent unauthorized or inadvertent configuration adjustments.

## 4.3.2. PRIMARY SETUP MENU

## 4.3.3. THE AREAS ACCESSIBLE UNDER THE Setup MODE ARE SHOWN IN TABLE 4-4 AND SECONDARY SETUP MENU (SETUP>MORE)

Table 4-5.

**Table 4-4: Primary Setup Mode Features and Functions**

| MODE OR FEATURE | CONTROL BUTTON | DESCRIPTION | MANUAL SECTION |
|---|---|---|---|
| Analyzer Configuration | **CFG** | Lists button hardware and software configuration information | 5 |
| Auto Cal Feature | **ACAL** | Used to set up and operate the AutoCal feature. Only appears if the analyzer has one of the internal valve options installed. | 5.2 and 9.4 |
| Internal Data Acquisition (DAS) | **DAS** | Used to set up the DAS system and view recorded data | 7 |
| Analog Output Reporting Range Configuration | **RNGE** | Used to configure the output signals generated by the instruments Analog outputs. | 5.7 |
| Calibration Password Security | **PASS** | Turns the calibration password feature ON/OFF. | 5.3 |
| Internal Clock Configuration | **CLK** | Used to Set or adjust the instrument's internal clock. | 5.6 |
| Advanced **SETUP** features | **MORE** | This button accesses the instruments secondary setup menu. | See Table 6-5 |

## 4.3.4. SECONDARY SETUP MENU (SETUP>MORE)

**Table 4-5: Secondary Setup Mode (SETUP>MORE) Features and Functions**

| MODE OR FEATURE | CONTROL BUTTON | DESCRIPTION | MANUAL SECTION |
|---|---|---|---|
| External Communication Channel Configuration | **COMM** | Used to set up and operate the analyzer's various serial channels including RS-232,RS-485, modem communication, Ethernet and/or USB. | 5.7 |
| System Status Variables | **VARS** | Used to view various variables related to the instruments current operational status.<br>• Changes made to any variable are not recorded in the instrument's memory until the **ENTR** button is pressed.<br>• Pressing the **EXIT** button ignores the new setting. | 5.8 |
| System Diagnostic Features and Analog Output Configuration | **DIAG** | Used to access a variety of functions that are used to configure, test or diagnose problems with a variety of the analyzer's basic systems.<br>Most notably, the menus used to configure the output signals generated by the instruments Analog outputs are located here. | 5.9 |
| Alarm Limit Configuration[1] | **ALRM** | Used to turn the instrument's two alarms on and off as well as set the trigger limits for each. | 5.10 |
| [1] Alarm warnings only present when optional alarm package is activated. | | | |

**IMPORTANT**

**IMPACT ON READINGS OR DATA**

**Any changes made to a variable during the SETUP procedures are not acknowledged by the instrument until the ENTR button is pressed. If the EXIT button is pressed before the ENTR button, the analyzer will beep, alerting the user that the newly entered value has not been accepted.**

# 5. SETUP MENU

The SETUP menu is sued to set instrument parameters for performing configuration, calibration, reporting and diagnostics operations according to user needs.

## 5.1. SETUP → CFG: CONFIGURATION INFORMATION

Pressing the **CFG** button displays the instrument's configuration information. This display lists the analyzer model, serial number, firmware revision, software library revision, CPU type and other information.

- Special instrument or software features or installed options may also be listed here.
- Use this information to identify the software and hardware installed in your T300/T300M Analyzer when contacting customer service.

To access the configuration table, press:

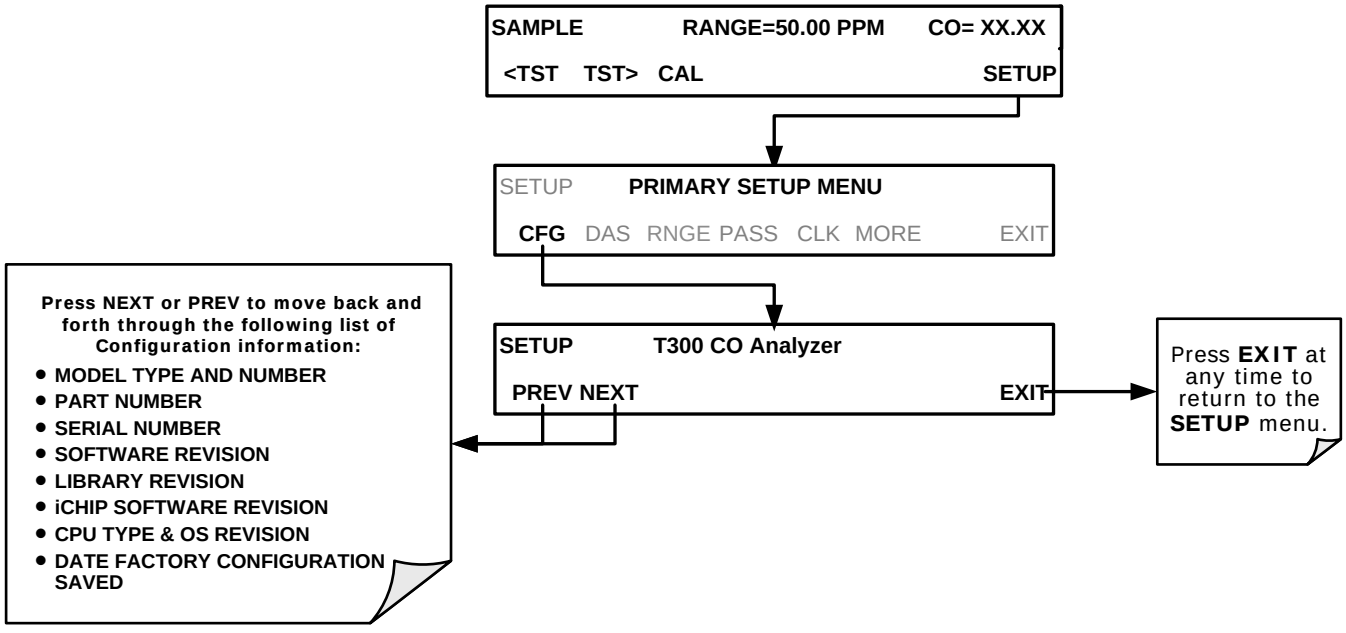

# 5.2. SETUP → ACAL: AUTOMATIC CALIBRATION

Instruments with one of the internal valve options installed can be set to automatically run calibration procedures and calibration checks. These automatic procedures are programmed using the submenus and functions found under the **ACAL** menu.

A menu tree showing the **ACAL** menu's entire structure can be found in Appendix A-1 of this manual.

Instructions for using the **ACAL** feature are located in the Section 9.4 of this manual along with all other information related to calibrating the T300/T300M Analyzer.

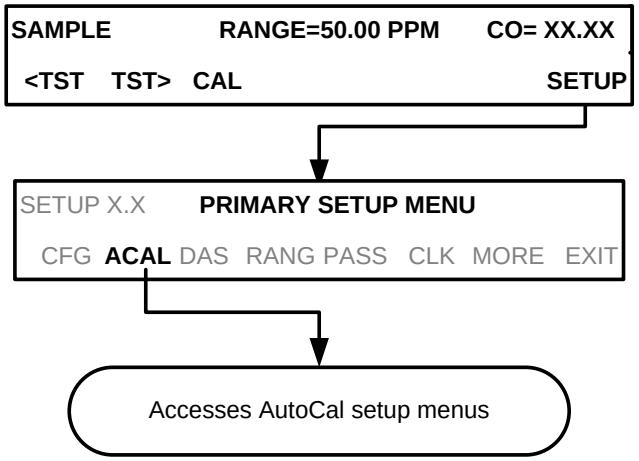


# 5.3. SETUP →DAS: INTERNAL DATA ACQUISITION SYSTEM

Use the SETUP>DAS menu to capture and record data. Refer to Section 7 for configuration and operation details.

# 5.4. SETUP → RNGE: ANALOG OUTPUT REPORTING RANGE CONFIGURATION

Use the SETUP>RNGE menu to configure output reporting ranges, including scaled reporting ranges to handle data resolution challenges. This section also describes configuration for Single, Dual, and Auto Range modes.

## 5.4.1. ANALOG OUTPUT RANGES FOR CO CONCENTRATION

The analyzer has several active analog output signals, accessible through the ANALOG OUT connector on the rear panel.

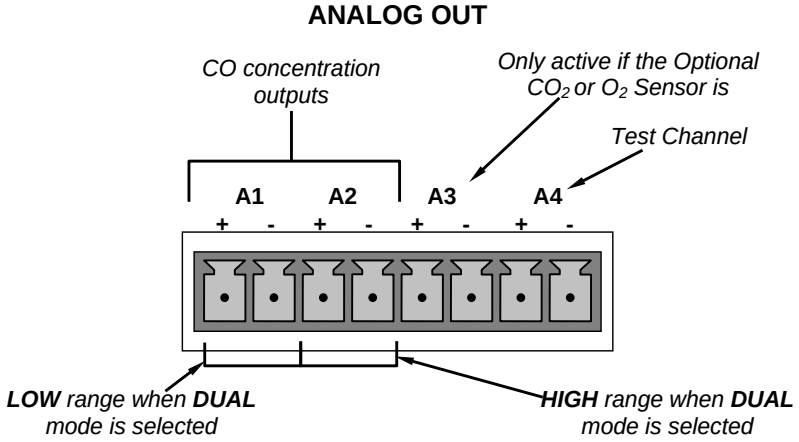


**Figure 5-1: Analog Output Connector Pin Out**

The outputs can be configured either at the factory or by the user for full scale outputs of 0.1 VDC, 1VDC, 5VDC or 10VDC.

Additionally, **A1, A2** and **A3** may be equipped with optional 0-20 mADC current loop drivers and configured for any current output within that range (e.g. 0-20, 2-20, 4-20, etc.). The user may also adjust the signal level and scaling of the actual output voltage or current to match the input requirements of the recorder or datalogger (See Section 5.9.3.9).

In its basic configuration, the **A1** and **A2** channels output a signal that is proportional to the CO concentration of the sample gas. Several modes are available which allow them to operate independently or be slaved together (See Section 5.4.3).

EXAMPLE:

**A1** OUTPUT: Output Signal = 0-5 VDC representing 0-1000 ppm concentration values

**A2** OUTPUT: Output Signal = 0 – 10 VDC representing 0-500 ppm concentration values.

Output **A3** is only active if the $CO_2$ or $O_2$ sensor option is installed. In this case a signal representing the currently measured $CO_2$ or $O_2$ concentration is output on this channel.

The output, labeled **A4** is special. It can be set by the user (See Section 5.9.8.1) to output several of the test functions accessible through the **<TST TST>** buttons of the units sample display.

## 5.4.2. PHYSICAL RANGE VS ANALOG OUTPUT REPORTING RANGES

Functionally, the T300 Family of CO Analyzers have one hardware PHYSICAL RANGE that is capable of determining CO concentrations between across a very wide array of values.

**Table 5-1: T300 Family Physical Range by Model**

| MODEL | RANGE |
|---|---|
| T300 | 0 – 1000 ppm |
| T300M | 0 – 5000 ppm |

This architecture improves reliability and accuracy by avoiding the need for extra, switchable, gain-amplification circuitry. Once properly calibrated, the analyzer's front panel will accurately report concentrations along the entire span of its physical range.

Because many applications use only a small part of the analyzer's full physical range, this can create data resolution problems for most analog recording devices. For example, in an application where an T300 is being used to measure an expected concentration of typically less than 50 ppm CO, the full scale of expected values is only 4% of the instrument's full 1000 ppm measurement range. Unmodified, the corresponding output signal would also be recorded across only 2.5% of the range of the recording device.

The T300/T300M Analyzers solve this problem by allowing the user to select a scaled reporting range for the analog outputs that only includes that portion of the physical range relevant to the specific application.

Only this REPORTING RANGE of the analog outputs is scaled; the physical range of the analyzer and the readings displayed on the front panel remain unaltered.

**Note** **Neither the DAS values stored in the CPU's memory nor the concentration values reported on the front panel are affected by the settings chosen for the reporting range(s) of the instrument.**

## 5.4.3. REPORTING RANGE MODES: SINGLE, DUAL, AUTO RANGES

The T300/T300M provides three analog output range modes to choose from.

- Single range (**SNGL**) mode sets a single maximum range for the analog output. If single range is selected both outputs are slaved together and will represent the same measurement span (e.g. 0-50 ppm), however their electronic signal levels may be configured for different ranges (e.g. 0-10 VDC vs. 0-.1 VDC).
- Dual range (**DUAL**) allows the A1 and A2 outputs to be configured with different measurement spans as well as separate electronic signal levels.
- Auto range (**AUTO**) mode gives the analyzer to ability to output data via a low range and high range. When this mode is selected the analyzer will automatically switch between the two ranges dynamically as the concentration value fluctuates.

Range status is also output via the external digital I/O status outputs (See Section 3.3.1.4).

To select the Analog Output Range Type press:

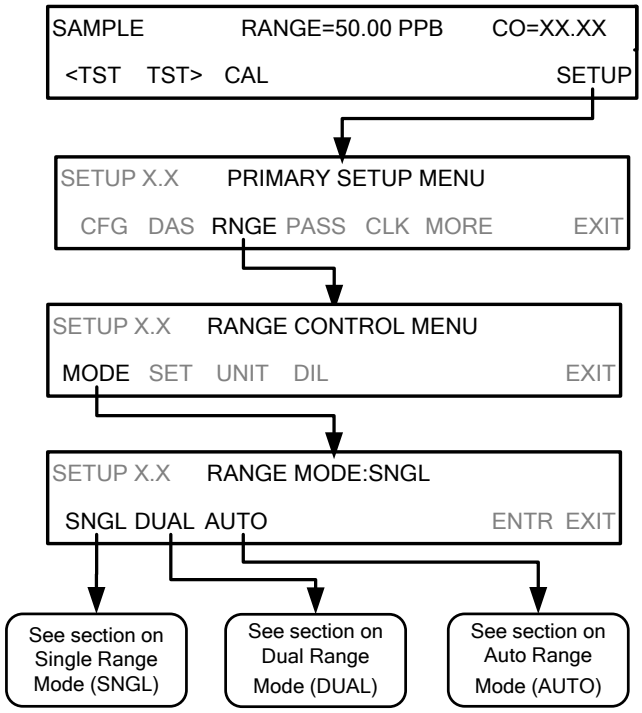


Upper span limit setting for the individual range modes are shared. Resetting the span limit in one mode also resets the span limit for the corresponding range in the other modes as follows:

| SNGL | | DUAL | | AUTO |
|---|---|---|---|---|
| Range | ←→ | Range1 | ←→ | Low Range |
| | | Range2 | ←→ | High Range |

### 5.4.3.1. **SINGLE RANGE MODE (SNGL)**

Single Range Mode (SNGL) is the default reporting range mode for the analyzer.

When the single range mode is selected (**SNGL**), all analog CO concentration outputs (**A1 and A2**) are slaved together and set to the same reporting range limits (e.g. 500.0 ppb). The span limit of this reporting range can be set to any value within the physical range of the analyzer.

Although both outputs share the same concentration reporting range, the electronic signal ranges of the analog outputs may still be configured for different values (e.g. 0-5 VDC, 0-10 VDC, etc; see Section 5.9.3.1)

To select **SNGL** range mode and to set the upper limit of the range, press:

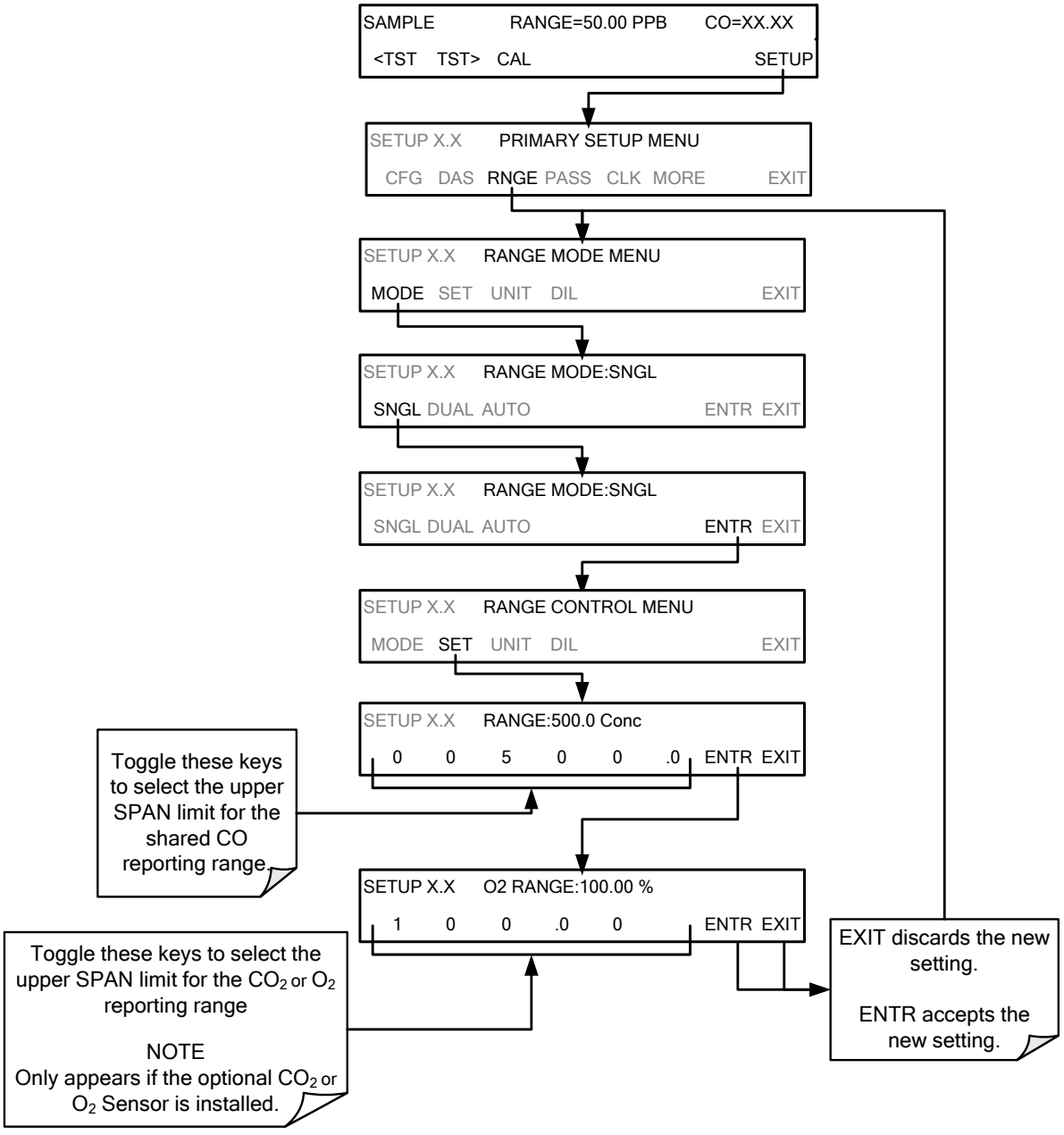

### 5.4.3.2. **DUAL RANGE MODE (DUAL)**

Selecting the **DUAL** range mode allows the **A1** and **A2** outputs to be configured with different reporting ranges. The analyzer software calls these two ranges low and high.

- The **LOW** range setting corresponds with the analog output labeled **A1** on the rear panel of the instrument.
- The **HIGH** range setting corresponds with the **A2** output.

While the software names these two ranges low and high, they do not have to be configured that way. For example: The low range can be set for a span of 0-1000 ppm while the high range is set for 0-500 ppm.

In **DUAL** range mode the **RANGE** test function displayed on the front panel will be replaced by two separate functions:

- **RANGE1**: The range setting for the A1 output.
- **RANGE2**: The range setting for the A2 output.

To select the **DUAL** range mode press following buttonstroke sequence

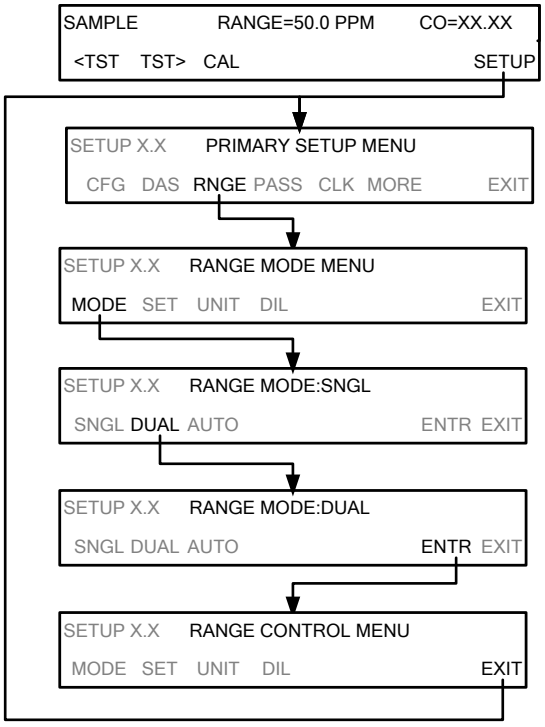


When the instrument's range mode is set to DUAL, the concentration field in the upper right hand corner of the display alternates between displaying the low range value and the high range value. The concentration currently being displayed is identified as follows: **C1**= **LOW** (or **A1**) and **C2** = **HIGH** (or **A2**).

**IMPORTANT**

**IMPACT ON READINGS OR DATA**

**In DUAL range mode the LOW and HIGH ranges have separate slopes and offsets for computing CO concentrations. The two ranges must be independently calibrated.**

To set the upper range limit for each independent reporting range, press:

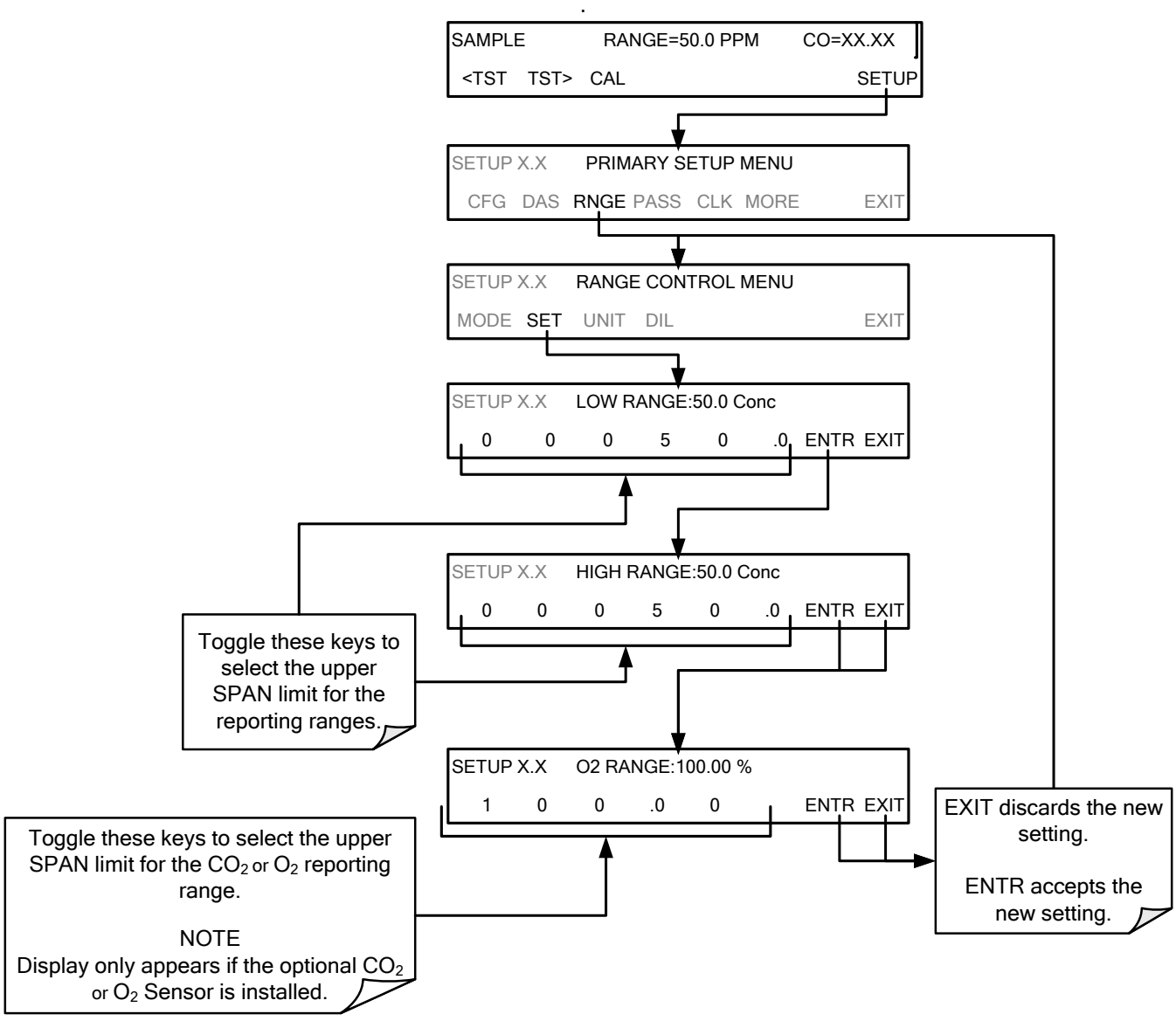

### 5.4.3.3. **AUTO RANGE MODE (AUTO)**

In **AUTO** range mode, the analyzer automatically switches the reporting range between two user-defined ranges (low and high).

- The unit will switch from low range to high range when the $CO_2$ concentration exceeds 98% of the low range span.
- The unit will return from high range back to low range once both the $CO_2$ concentration falls below 75% of the low range span.

In **AUTO** Range Mode the instrument reports the same data in the same range on both the **A1** and **A2** outputs and automatically switches both outputs between ranges as described above. Also the **RANGE** test function displayed on the front panel will be replaced by two separate functions:

- **RANGE1**: The **LOW** range setting for all analog outputs.
- **RANGE2**: The **HIGH** range setting for all analog outputs.

The high/low range status is also reported through the external, digital status bits (See Section 3.3.1.4).

To set individual ranges press the following control button sequence.

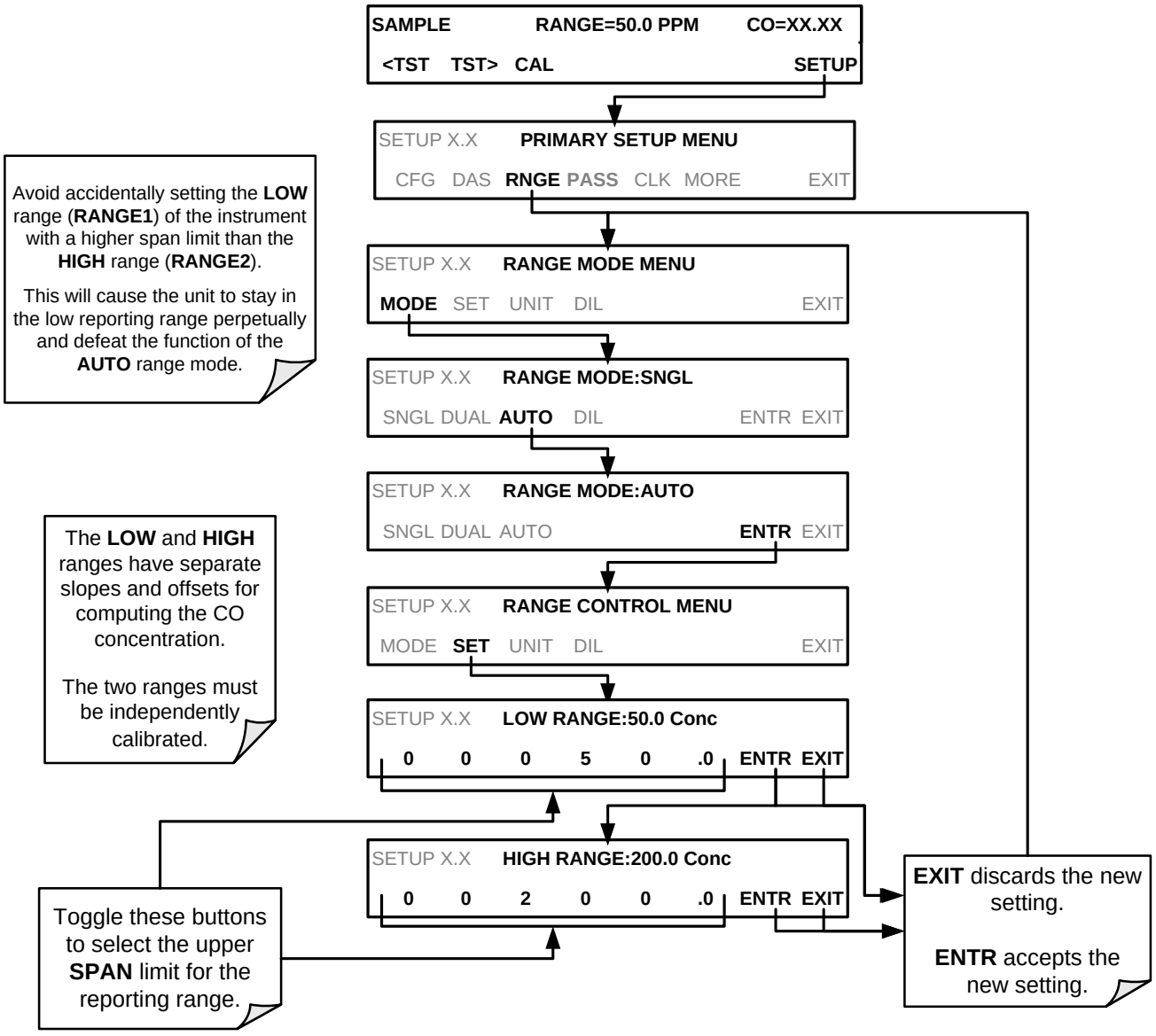

## 5.4.4. **RANGE UNITS**

The T300/T300M can display concentrations in parts per million ($10^6$ mols per mol, PPM) or milligrams per cubic meter ($mg/m^3$, MG). Changing units affects all of the display, COMM port and DAS values for all reporting ranges regardless of the analyzer's range mode. To change the concentration units:

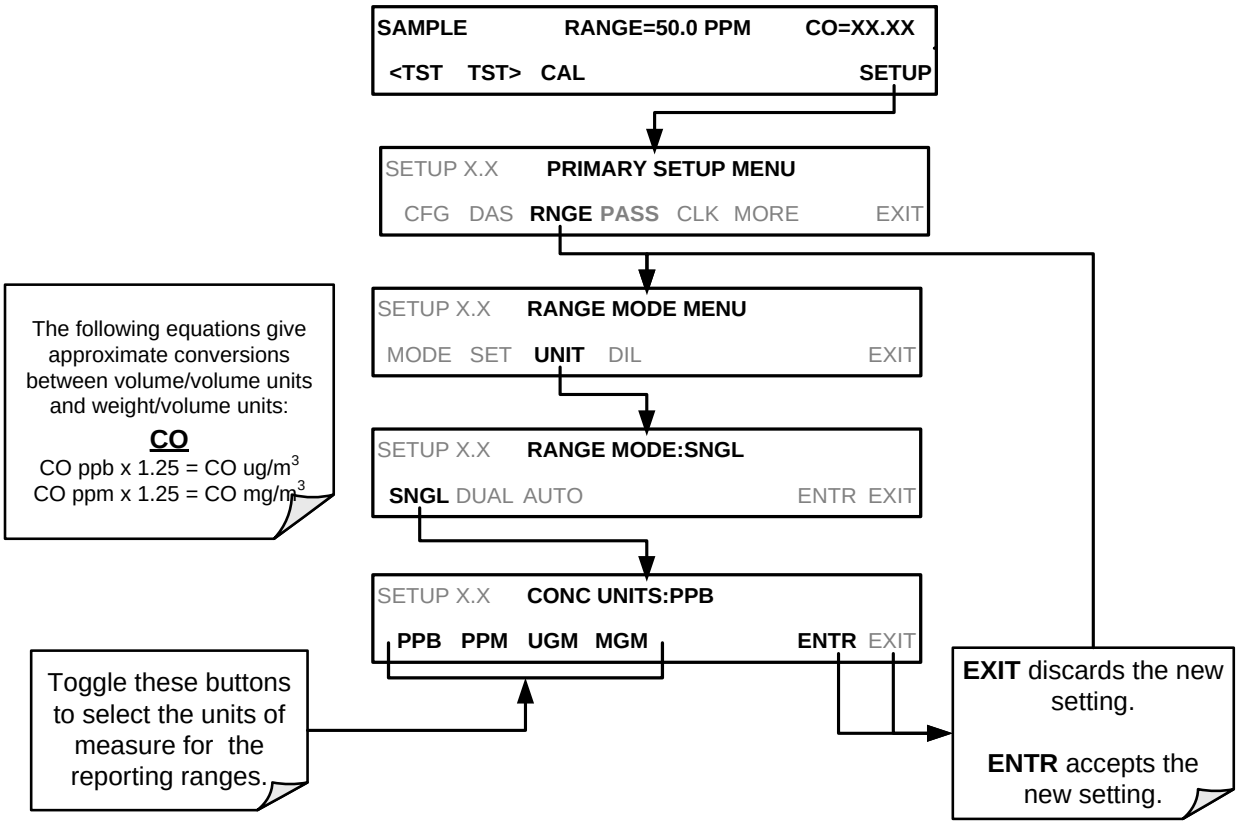


**IMPORTANT**

**IMPACT ON READINGS OR DATA**

**In order to avoid a reference temperature bias, the analyzer must be recalibrated after every change in reporting units.**

**IMPORTANT**

**IMPACT ON READINGS OR DATA**

**Concentrations displayed in mg/m3 and ug/m3 use 0° C and 760 mmHg for Standard Temperature and Pressure (STP). Consult your local regulations for the STP used by your agency.**
**(Example: US EPA uses 25 °C as the reference temperature).**

**Once the Units of Measurement have been changed from volumetric (ppb or ppm) to mass units (µg/m3 or mg/m3) the analyzer MUST be recalibrated, as the "expected span values" previously in effect will no longer be valid. Simply entering new expected span values without running the entire calibration routine IS NOT sufficient.**

**This will also counteract any discrepancies between STP definitions.**

## 5.4.5. **DILUTION RATIO (OPTION)**

This feature is a optional software utility that allows the user to compensate for any dilution of the sample gas that may occur before it enters the sample inlet. Typically this occurs in continuous emission monitoring (CEM) applications where the sampling method used to remove the gas from the stack dilutes it.

Using the dilution ratio option is a 4-step process:

1. Select the appropriate units of measure (see Section 5.4.4).
2. Select the reporting range mode and set the reporting range upper limit (see Section 5.4.3).

- Ensure that the upper span limit entered for the reporting range is the maximum expected concentration of the **UNDILUTED** gas.

3. Set the dilution factor as a gain (e.g., a value of 20 means 20 parts diluent and 1 part of sample gas):

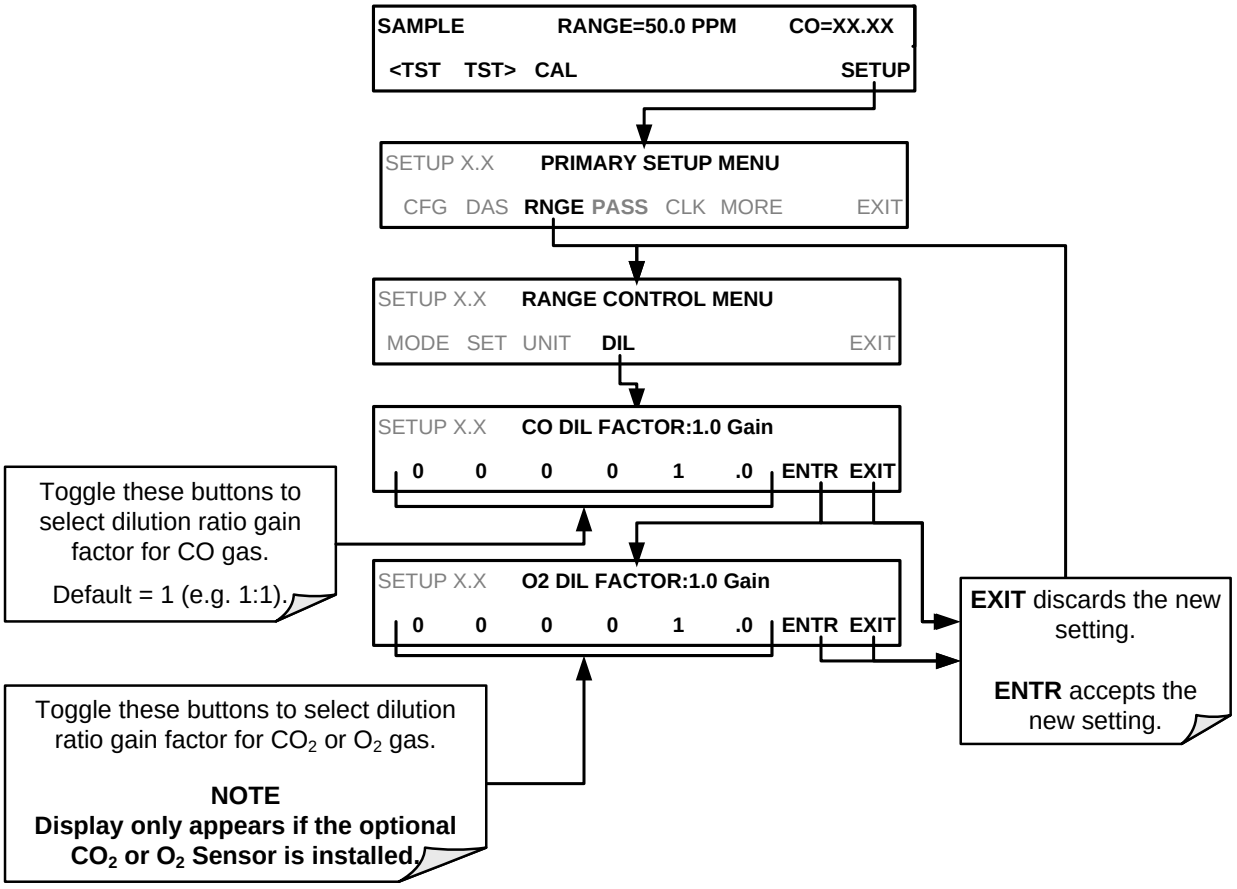


4. Calibrate the analyzer.

- Make sure that the calibration span gas is either supplied through the same dilution system as the sample gas or has an appropriately lower actual concentration.

  EXAMPLE: If the reporting range limit is set for 100 ppm and the dilution ratio of the sample gas is 20 gain, either:

- a span gas with the concentration of 100 ppm can be used if the span gas passes through the same dilution steps as the sample gas, or;
- a 5 ppm span gas must be used if the span gas **IS NOT** routed through the dilution system.

# 5.5. SETUP → PASS: PASSWORD PROTECTION

The menu system provides password protection of the calibration and setup functions to prevent unauthorized adjustments. When the passwords have been enabled in the **PASS** menu item, the system will prompt the user for a password anytime a password-protected function (e.g., SETUP) is selected. This allows normal operation of the instrument, but requires the password (101) to access to the menus under SETUP. When PASSWORD is disabled (SETUP>OFF), any operator can enter the Primary Setup (SETUP) and Secondary Setup (SETUP>MORE) menus. Whether PASSWORD is enabled or disabled, a password (default 818) is required to enter the VARS or DIAG menus in the SETUP>MORE menu.

**Table 5-2: Password Levels**

| PASSWORD | LEVEL | MENU ACCESS ALLOWED |
|---|---|---|
| Null (000) | Operation | All functions of the main menu (top level, or Primary, menu) |
| **101** | Configuration/Maintenance | Access to Primary and Secondary SETUP Menus when PASSWORD is enabled |
| **818** | Configuration/Maintenance | Access to Secondary SETUP Submenus **VARS** and **DIAG** whether PASSWORD is enabled or disabled. |

To enable or disable passwords, press:

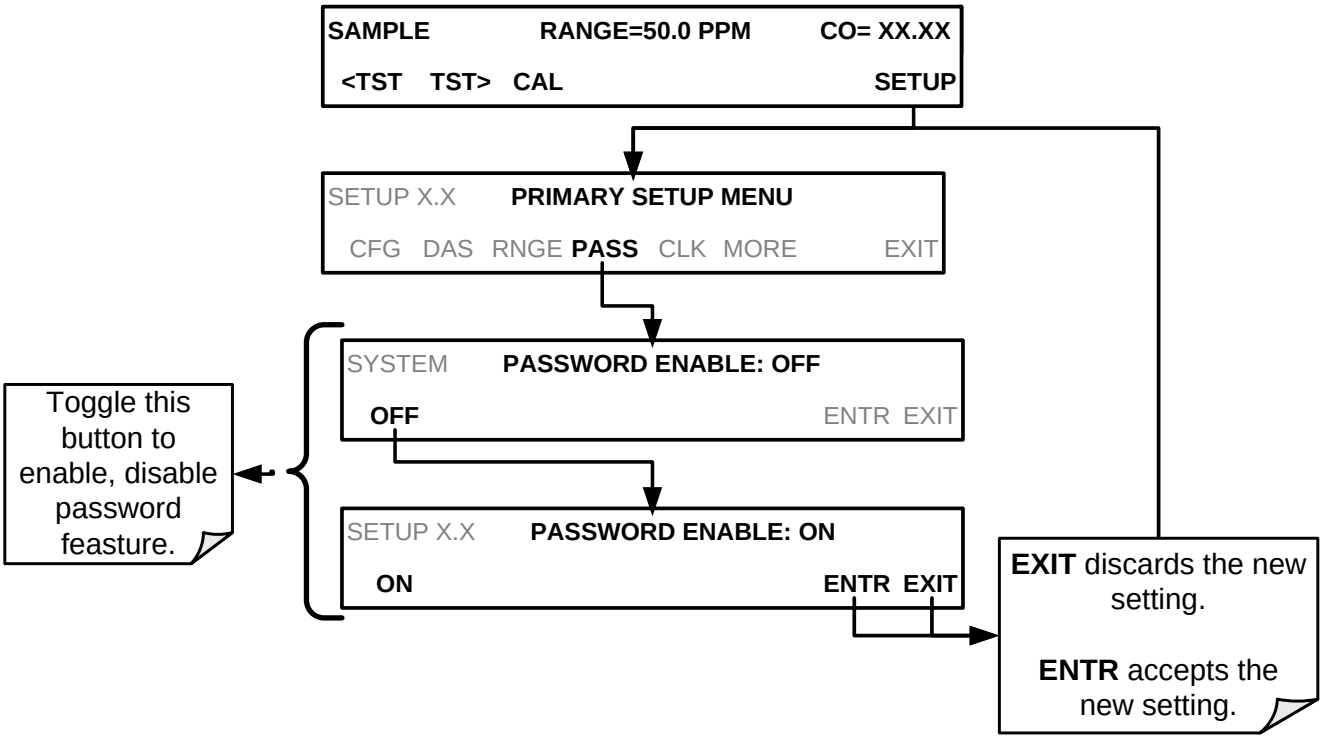


If the password feature is enabled, then when entering either Calibration or Setup Mode, the default password displayed will be 000, and the new password must be input. Example: If all passwords are enabled, the following control button sequence would be required to enter the **SETUP** menu:

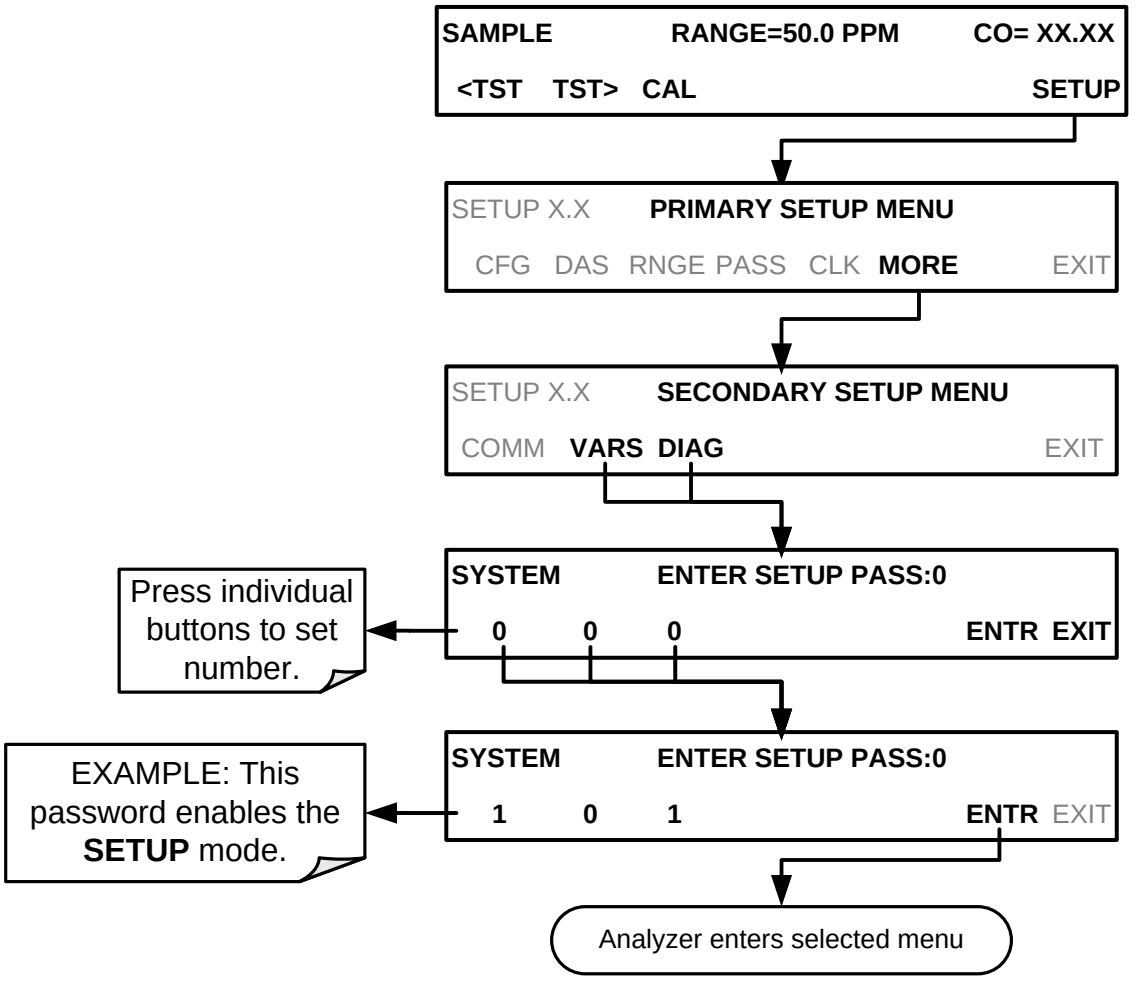


**Note**

**The instrument still prompts for a password when entering the VARS and DIAG menus, even if passwords are disabled. It will display the default password (818) upon entering these menus.**

**The user only has to press ENTR to access the password-protected menus but does not have to enter the required number code.**

# 5.6. SETUP → CLK: SETTING THE INTERNAL TIME-OF-DAY CLOCK AND ADJUSTING SPEED

### 5.6.1.1. SETTING THE INTERNAL CLOCK'S TIME AND DAY

The T300/T300M has a time of day clock that supports the **DURATION** step of the automatic calibration (**ACAL**) sequence feature, time of day TEST function, and time stamps on for the DAS feature and most COMM port messages.

To set the clock's time and day, press:

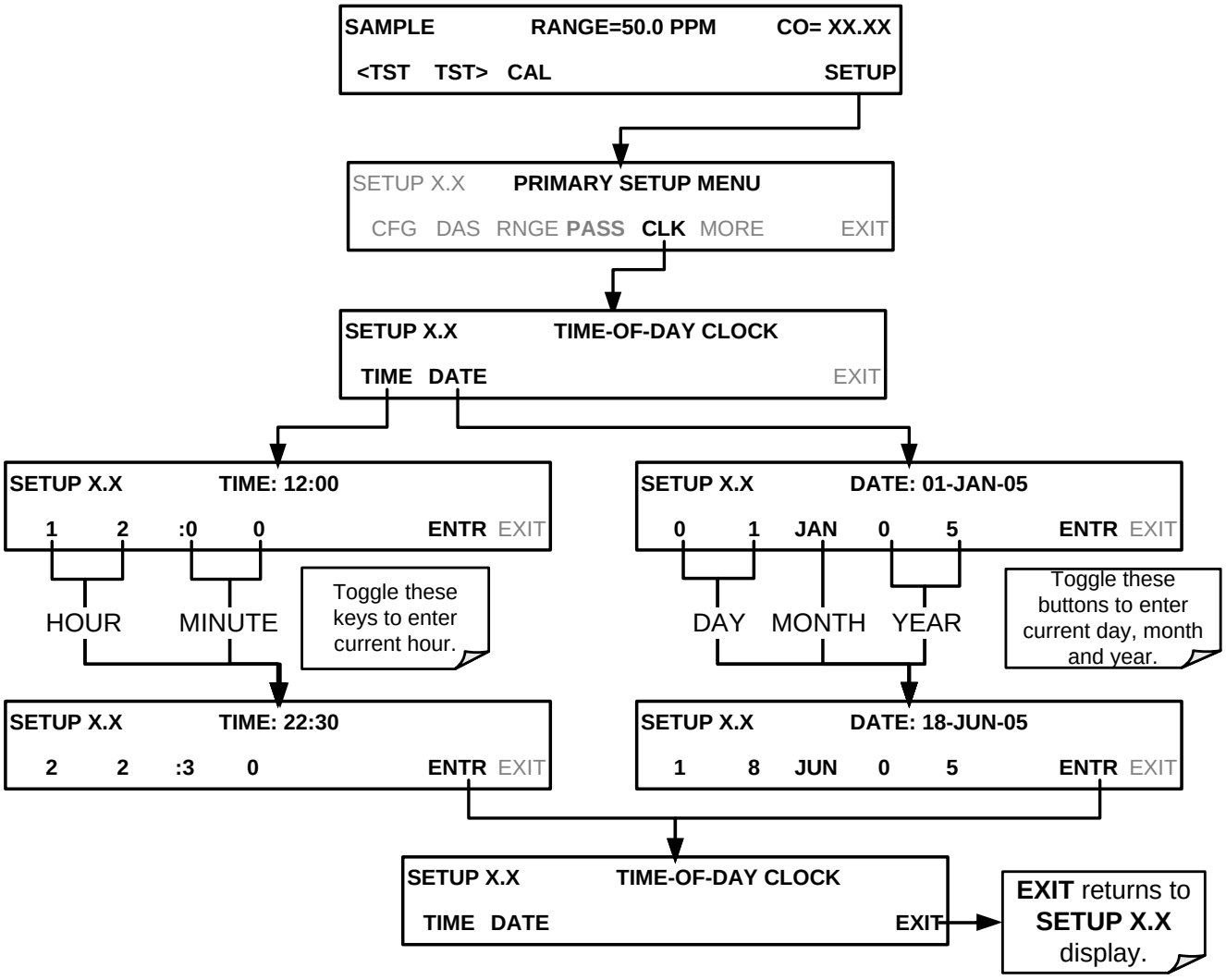


### 5.6.1.2. ADJUSTING THE INTERNAL CLOCK'S SPEED

In order to compensate for CPU clocks which run faster or slower, you can adjust a variable called **CLOCK_ADJ** to speed up or slow down the clock by a fixed amount every day.

The **CLOCK_AD** variable is accessed via the **VARS** submenu: To change the value of this variable, press:

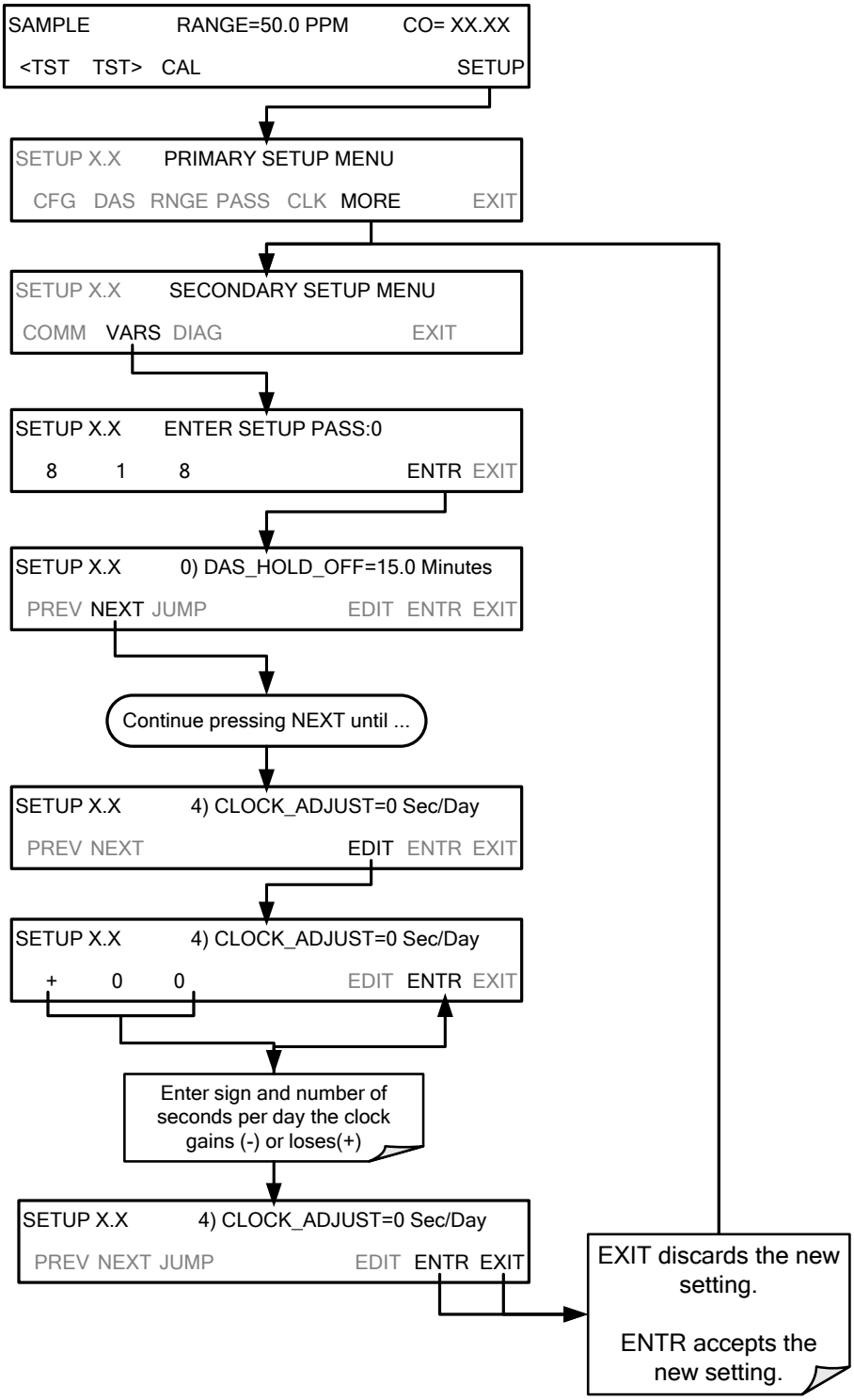
SAMPLE RANGE=50.0 PPM CO= XX.XX
<TST TST> CAL SETUP
SETUP X.X PRIMARY SETUP MENU
CFG DAS RNGE PASS CLK MORE EXIT
SETUP X.X SECONDARY SETUP MENU
COMM VARS DIAG EXIT
SETUP X.X ENTER SETUP PASS:0
8 1 8 ENTR EXIT
SETUP X.X 0) DAS_HOLD_OFF=15.0 Minutes
PREV NEXT JUMP EDIT ENTR EXIT
Continue pressing NEXT until ...
SETUP X.X 4) CLOCK_ADJUST=0 Sec/Day
PREV NEXT EDIT ENTR EXIT
SETUP X.X 4) CLOCK_ADJUST=0 Sec/Day
+ 0 0 EDIT ENTR EXIT
Enter sign and number of seconds per day the clock gains (-) or loses(+)
SETUP X.X 4) CLOCK_ADJUST=0 Sec/Day
PREV NEXT JUMP EDIT ENTR EXIT
EXIT discards the new setting.
ENTR accepts the new setting.

# 5.7. SETUP →COMM: COMMUNICATIONS PORTS

This section introduces the communications setup menu; Section 6 provides the setup instructions and operation information. Press SETUP>ENTR>MORE>COMM to arrive at the communications menu.

## 5.7.1. ID (MACHINE IDENTIFICATION)

Press ID to display and/or change the Machine ID, which must be changed to a unique identifier (number) when more than one instrument of the same model is used:

- in an RS-232 multidrop configuration (Sections 3.3.1.8 and 6.7.2)
- on the same Ethernet LAN (Section 6.5)
- when applying MODBUS protocol (Section 6.7.1)
- when applying Hessen protocol (Section 6.7.2)

The default ID is the same as the model number; for the Model T100, the ID is 0100. Press any button(s) in the MACHINE ID menu (Figure 5-2) until the Machine ID Parameter field displays the desired identifier.

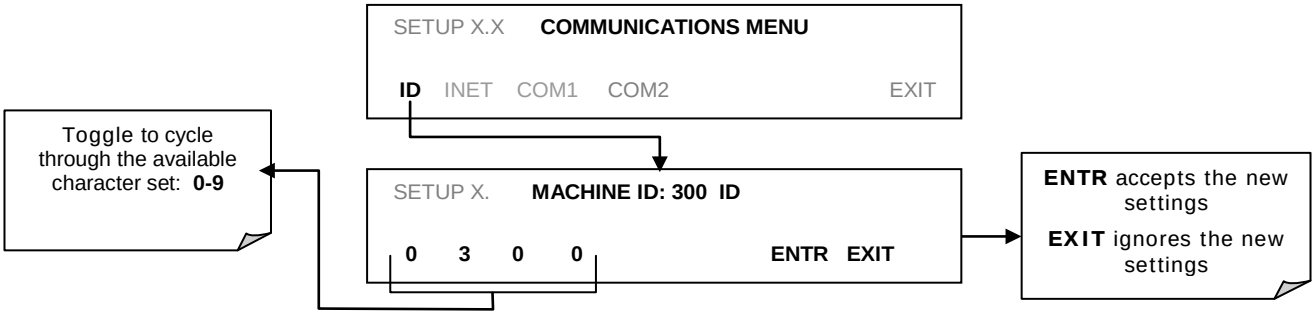


**Figure 5-2: COMM– Machine ID**

The ID can be any 4-digit number and can also be used to identify analyzers in any number of ways (e.g. location numbers, company asset number, etc.)

## 5.7.2. INET (ETHERNET)

Use SETUP>COMM>INET to configure Ethernet communications, whether manually or via DHCP. Please see Section 6.5 for configuration details.

## 5.7.3. COM1 AND COM2 (MODE, BAUD RATE AND TEST PORT)

Use the SETUP>COMM>COM1[COM2] menus to:

- configure communication modes (Section 6.2.1
- view/set the baud rate (Section 6.2.2)
- test the connections of the com ports (Section 6.2.3).

Configuring COM1 or COM2 requires setting the DCE DTE switch on the rear panel. Section 6.1 provides DCE DTE information.

# 5.8. SETUP →VARS: VARIABLES SETUP AND DEFINITION

The T300/T300M has several user-adjustable software variables, which define certain operational parameters. Usually, these variables are automatically set by the instrument's firmware, but can be manually redefined using the **VARS** menu.

The following table lists all variables that are available within the 818 password protected level. See Appendix A-2 for a detailed listing of all of the T300/T300M variables that are accessible through the remote interface.

**Table 5-3: Variable Names (VARS)**

| NO. | VARIABLE | DESCRIPTION | ALLOWED VALUES | VARS DEFAULT VALUES |
|---|---|---|---|---|
| **0** | **DAS_HOLD_OFF** | Changes the Internal Data Acquisition System (DAS) **HOLDOFF** timer (Section 7.1.11).<br>No data is stored in the DAS channels during situations when the software considers the data to be questionable such as during warm up of just after the instrument returns from one of its calibration mode to **SAMPLE** Mode. | May be set for intervals between 0.5 – 20 min | **15 min.** |
| **1** | **CONC_PRECISION** | Allows the user to set the number of significant digits to the right of the decimal point display of concentration and stability values. | AUTO, 1, 2, 3, 4 | **AUTO** |
| **2** | **DYN_ZERO** [1] | Dynamic zero automatically adjusts offset and slope of the CO response when performing a zero point calibration during an AutoCal (see Section 9.4). | ON/OFF | **OFF** |
| **3** | **DYN_SPAN** [1] | Dynamic span automatically adjusts the offsets and slopes of the CO response when performing a slope calibration during an AutoCal (see Section 9.4). | ON/OFF | **OFF** |
| **4** | **CLOCK_ADJ** | Adjusts the speed of the analyzer's clock. Choose the + sign if the clock is too slow, choose the - sign if the clock is too fast. | -60 to +60 s/day | **0 sec** |
| **5** | **STABIL_GAS**[2] | Selects which gas measurement is displayed when the STABIL test function is selected. | CO; $CO_2$ & $O_2$ | **CO** |

[1] Use of the DYN_ZERO and DYN_SPAN features are not allowed for applications requiring EPA equivalency.
[2] This VARS only appears if either the optional $O_2$ or $CO_2$ sensors are installed.

**IMPORTANT**

**IMPACT ON READINGS OR DATA**

**There are more VARS available when using the password, 929, for configuration. Use caution when pressing any buttons while in this setup. Any changes made may alter the performance of the instrument or cause the instrument to not function properly. Note that if there is an accidental change to a setup parameter, press EXIT to discard the changes.**

To access and navigate the **VARS** menu, use the following button sequence.

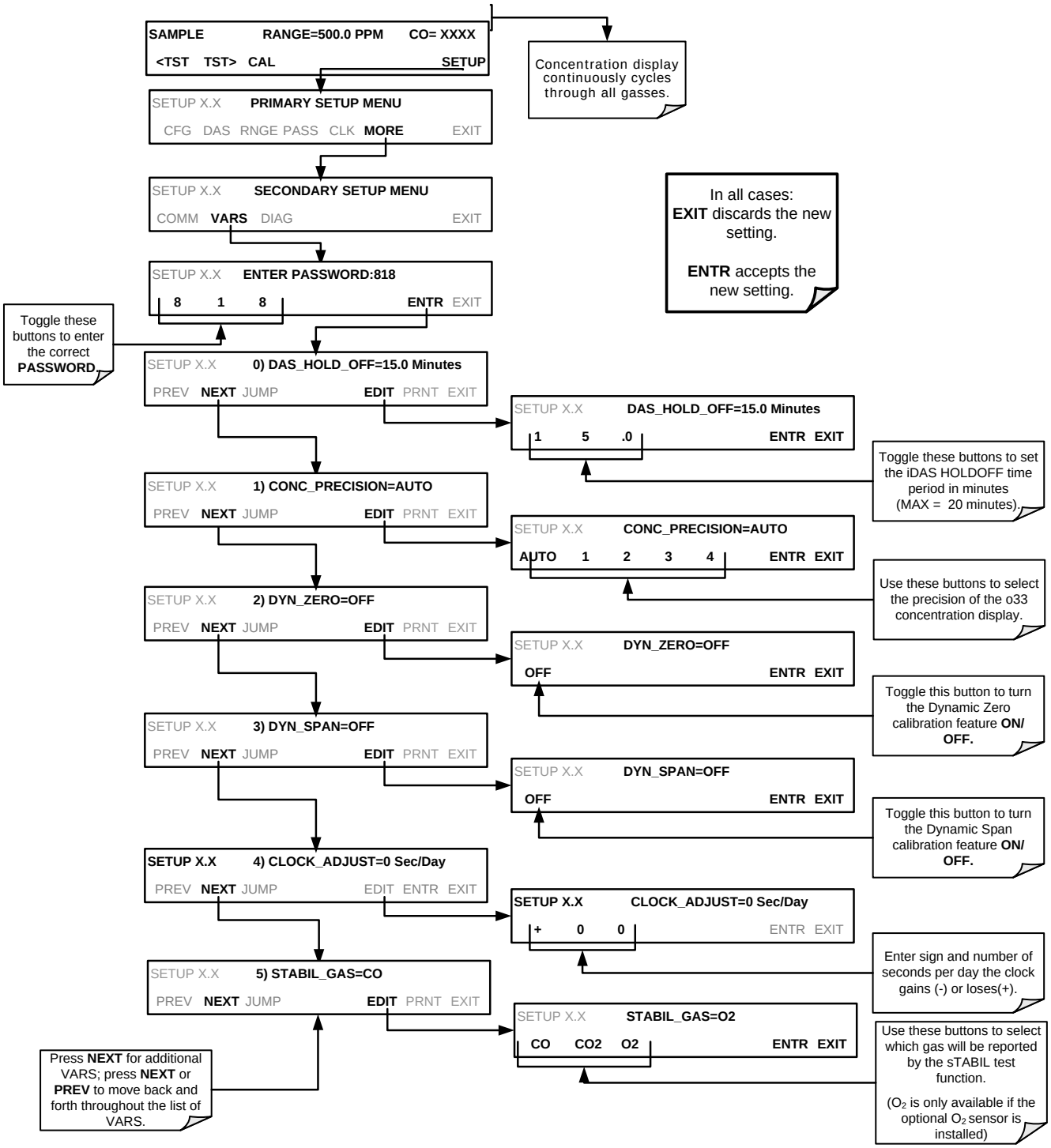

# 5.9. SETUP →DIAG: DIAGNOSTICS FUNCTIONS

A series of diagnostic tools is grouped together under the **SETUP→MORE→DIAG** menu, as these parameters are dependent on firmware revision (see Appendix A). These tools can be used in a variety of troubleshooting and diagnostic procedures and are referred to in many places of the maintenance and trouble-shooting sections of this manual.

The various operating modes available under the **DIAG** menu are:

**Table 5-4: Diagnostic Mode (DIAG) Functions**

| DIAG SUBMENU | SUBMENU FUNCTION | Front Panel Mode Indicator | MANUAL SECTION |
|---|---|---|---|
| **SIGNAL I/O** | Allows observation of all digital and analog signals in the instrument. Allows certain digital signals such as valves and heaters to be toggled **ON** and **OFF**. | **DIAG SIGNAL I/O** | 5.9.1, 12.1.3 and 12.5.8.1 |
| **ANALOG OUTPUT** | When entered, the analyzer performs an analog output step test. This can be used to calibrate a chart recorder or to test the analog output accuracy. | **DIAG ANALOG OUTPUT** | 5.9.2 and 12.5.8.2 |
| **ANALOG I/O CONFIGURATION** | This submenu allows the user to configure the analyzer's analog output channels, including choosing what parameter will be output on each channel. Instructions that appear here allow adjustment and calibration of the voltage signals associated with each output as well as calibration of the analog to digital converter circuitry on the motherboard. | **DIAG ANALOG I/O CONFIGURATION** | 5.9.3 |
| **ELECTRICAL TEST** | When activated, the analyzer performs an electrical test, which generates a voltage intended to simulate the measure and reference outputs of the SYNC/DEMOD board to verify the signal handling and conditioning of these signals. | **DIAG ELECTRICAL TEST** | 5.9.4 and 12.5.7.2 |
| **DARK CALIBRATION**[1] | Disconnects the preamp from synchronous demodulation circuitry on the SYNC/DEMOD PCA to establish the dark offset values for the measure and reference channel. | **DIAG DARK CALIBRATION** | 5.9.5 and 9.6.1 |
| **PRESSURE CALIBRATION**[1] | Allows the user to calibrate the sample pressure sensor. | **DIAG PRESSURE CALIBRATION** | 5.9.6 and 9.6.2 |
| **FLOW CALIBRATION**[1] | This function is used to calibrate the gas flow output signals of sample gas and ozone supply. | **DIAG FLOW CALIBRATION** | 5.9.7 and 9.6.3 |
| **TEST CHAN OUTPUT** | Selects one of the available test channel signals to output over the **A4** analog output channel. | **DIAG TEST CHAN OUTPUT** | 5.9.8 and 12.5.8.2 |

[1] These settings are retained after exiting DIAG mode.

To access the **DIAG** functions press the following buttons:

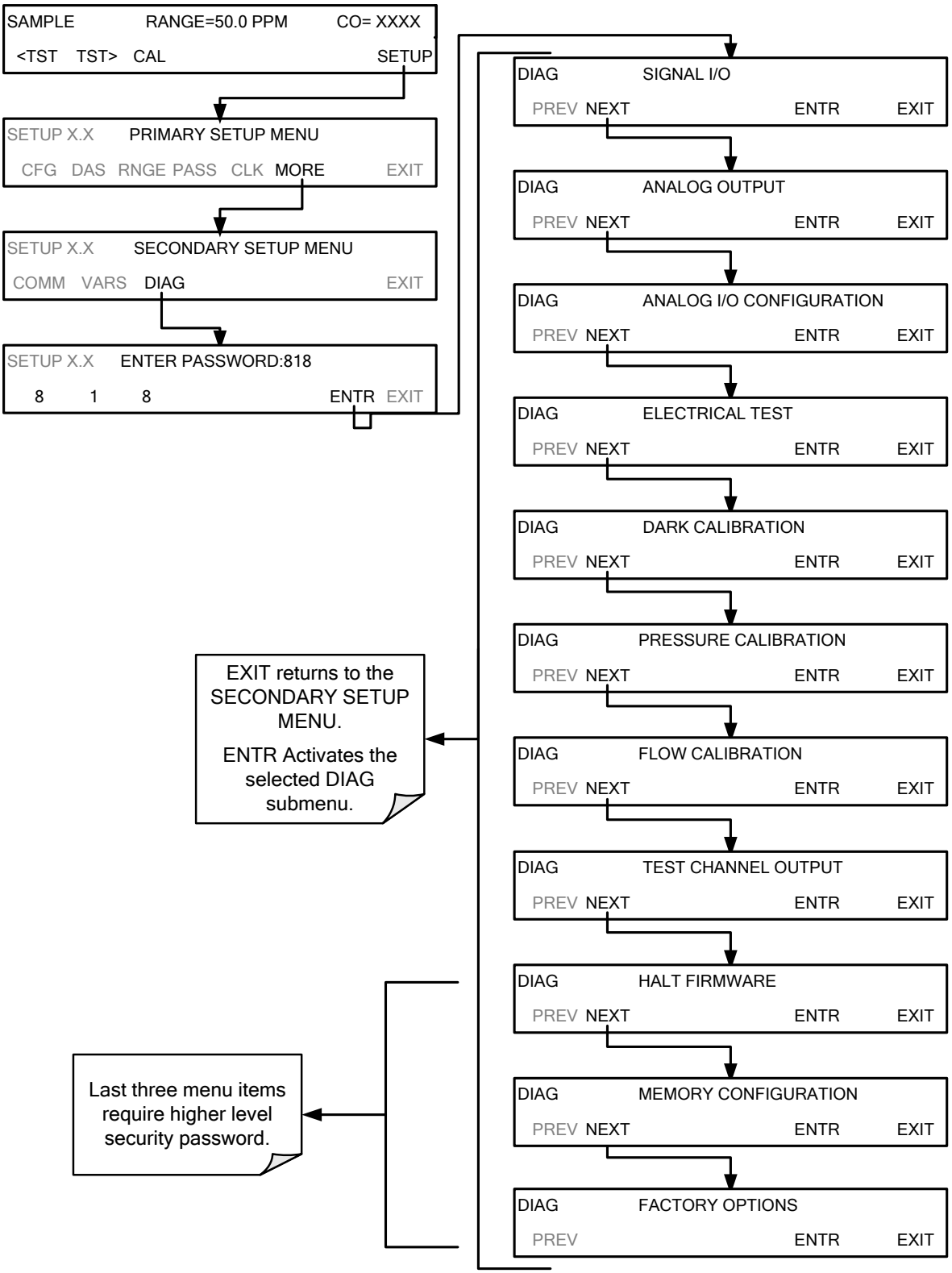

## 5.9.1. SIGNAL I/O

The signal I/O diagnostic mode allows a user to review and change the digital and analog input/output functions of the analyzer. Refer to Appendix A-4 for a full list of the parameters available for review under this menu.

**IMPORTANT**

**IMPACT ON READINGS OR DATA**

**Any changes of signal I/O settings will remain in effect only until the signal I/O menu is exited. Exceptions are the ozone generator override and the flow sensor calibration, which remain as entered when exiting.**

Access the SIGNAL I/O test mode from the DIAG Menu:

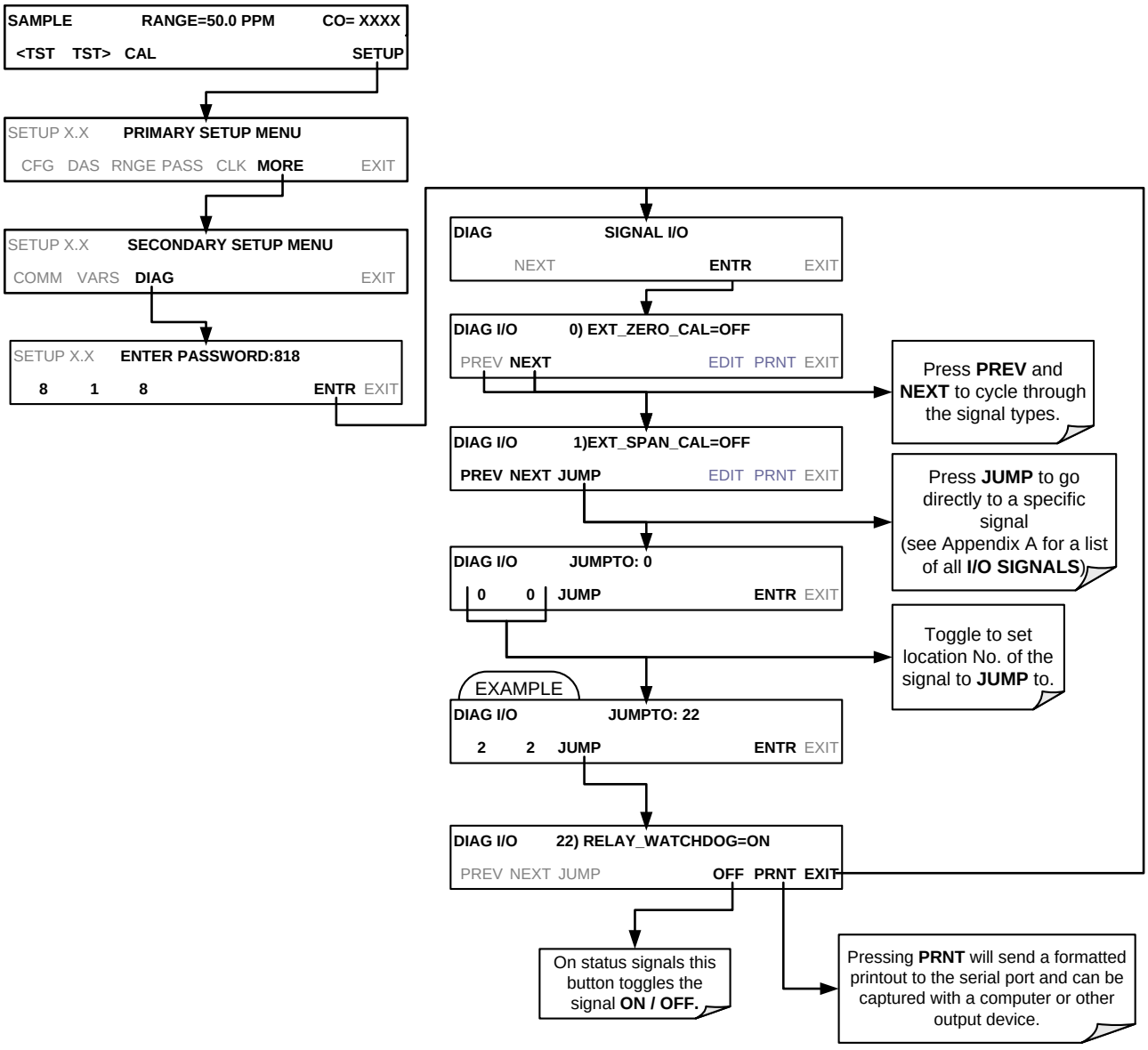

## 5.9.2. **ANALOG OUTPUT**

Analog Output is used as a step test to check the accuracy and proper operation of the analog outputs. The test forces all four analog output channels to produce signals ranging from 0% to 100% of the full scale range in 20% increments. This test is useful to verify the operation of the data logging/recording devices attached to the analyzer. (See also Section 12.5.8.2).

Access the Analog Output Step Test from the DIAG Menu as follows:

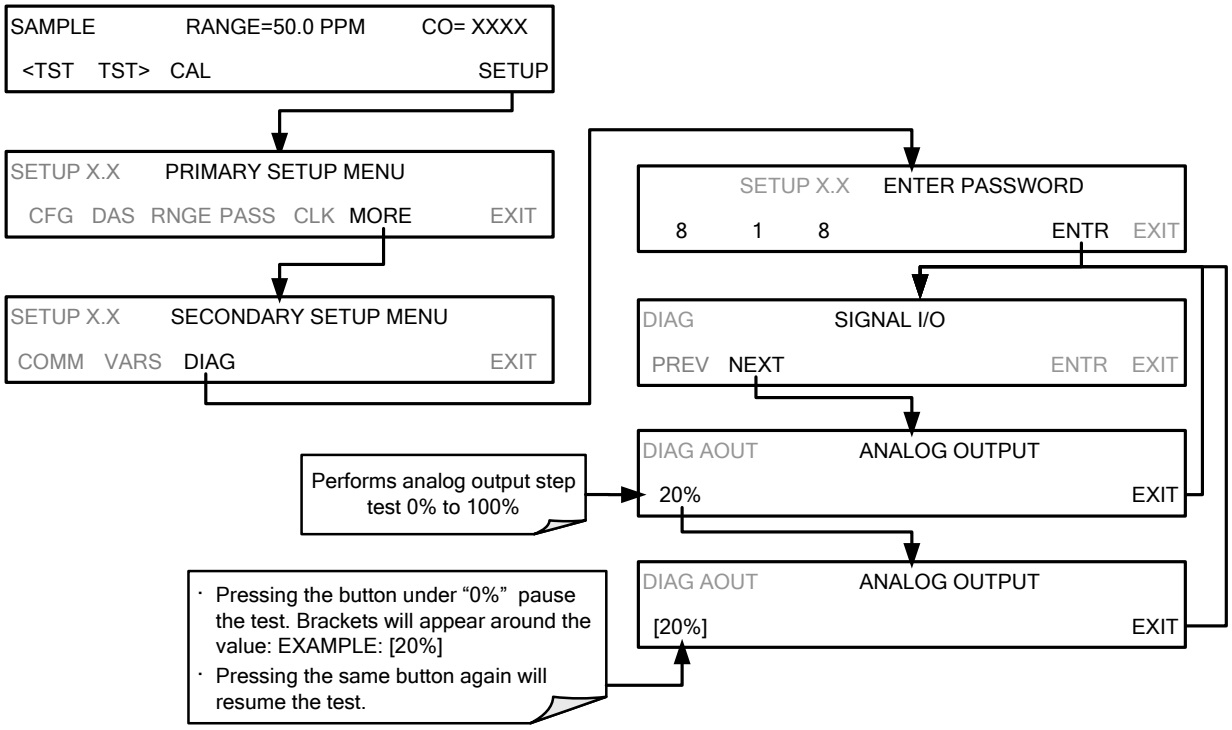

## 5.9.3. ANALOG I/O CONFIGURATION

The T300/T300M Analyzer comes equipped with four analog outputs.

- The first two outputs (**A1 & A2)** carry analog signals that represent the currently measured concentration of CO (see Section 5.4.1).
- The third output (**A3**) is only active if the analyzer is equipped with one of the optional 2nd gas sensors (e.g. $O_2$ or $CO_2$).
- The fourth output (**A4**) outputs a signal that can be set to represent the current value of one of several test functions (see Table 5-9).

Table 5-5 lists the analog I/O functions that are available in the T300/T300M Analyzer.

**Table 5-5: DIAG - Analog I/O Functions**

| SUB MENU | OUTPUT CHANNEL | FUNCTION |
|---|---|---|
| **AOUT CALIBRATED** | **ALL** | Initiates a calibration of the **A1**, **A2**, **A3** and **A4** analog output channels that determines the slope and offset inherent in the circuitry of each output.<br>These values are stored and applied to the output signals by the CPU automatically. |
| **CONC_OUT_1** | **A1** | Sets the basic electronic configuration of the **A1** output (CO Concentration).<br>There are four options:<br>• **RANGE**[1]: Selects the signal type (voltage or current loop) and level of the output.<br>• **REC OFS**[1]: Allows them input of a DC offset to let the user manually adjust the output level.<br>• **AUTO CAL**: Enables / Disables the **AOUT CALIBRATED** feature.<br>• **CALIBRATED**: Performs the same calibration as **AOUT CALIBRATED**, but on this one channel only. |
| **CONC_OUT_2** | **A2** | • Same as for CONC_OUT_1 but for analog channel **A2**. |
| **CONC_OUT_3** | **A3** | • Same as for CONC_OUT_1 but for analog channel **A3** but only if either the optional $O_2$ or $CO_2$ sensors are installed. |
| **TEST OUTPUT** | **A4** | • Same as for CONC_OUT_1 but for analog channel **A4** (TEST CHANNEL). |
| **AIN CALIBRATED** | **N/A** | Initiates a calibration of the A-to-D Converter circuit located on the Motherboard. |
| **XIN1**<br>.<br>.<br>.<br>**XIN8** | | For each of 8 external analog input channels, shows the gain, offset, engineering units, and whether the channel is to show up as a Test function. |

[1] Any changes made to **RANGE** or **REC_OFS** require recalibration of this output.

To access the **ANALOG I/O CONFIGURATION** submenu, press:

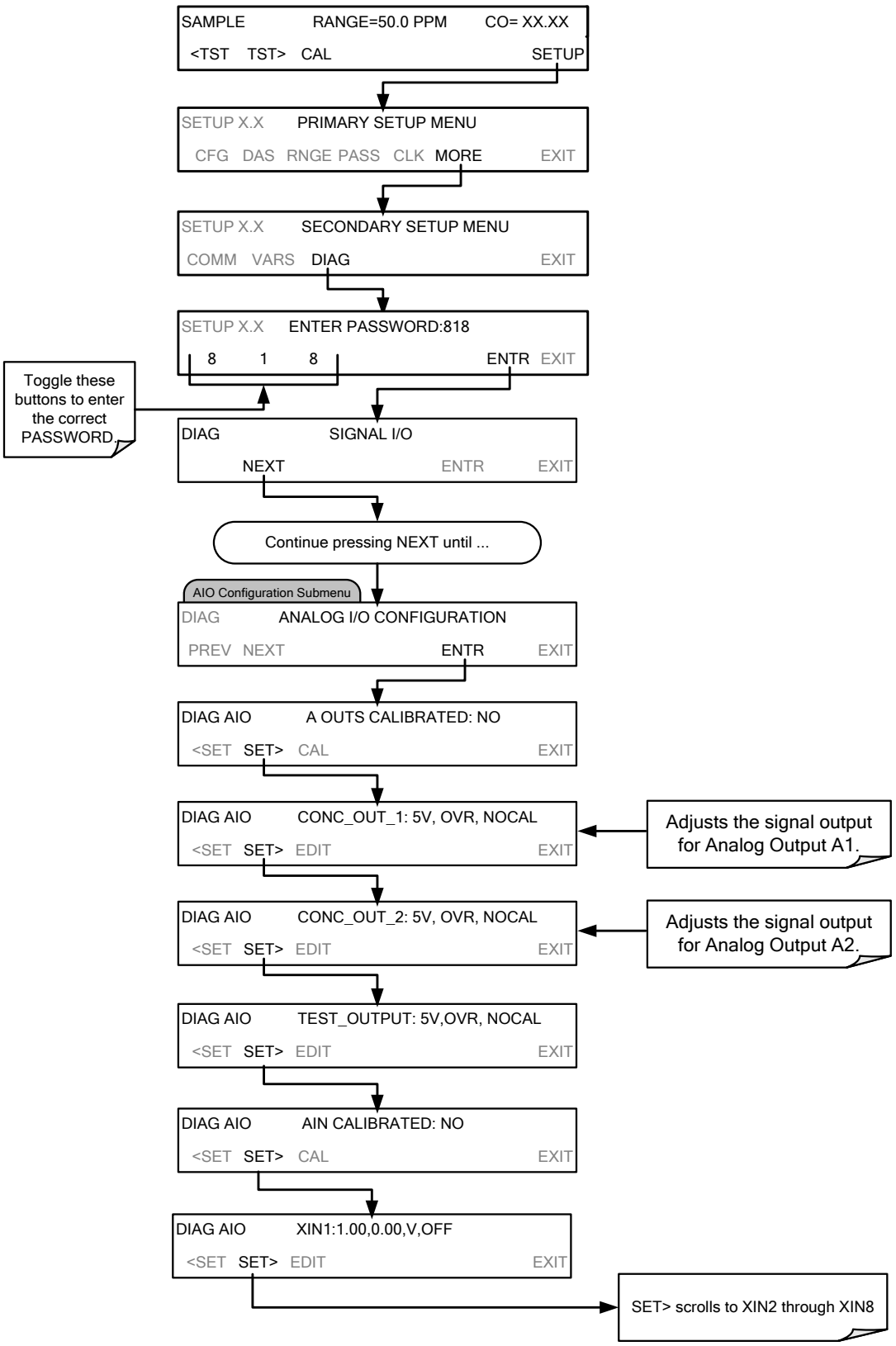


**Figure 5-3: Accessing the Analog I/O Configuration Submenus**

### 5.9.3.1. **ANALOG OUTPUT VOLTAGE / CURRENT RANGE SELECTION**

In its standard configuration, each of the analog outputs is set to output a 0–5 VDC signals. Several other output ranges are available. Each range has is usable from -5% to + 5% of the rated span.

**Table 5-6: Analog Output Voltage Ranges**

| RANGE NAME | RANGE SPAN | MINIMUM OUTPUT | MAXIMUM OUTPUT |
|---|---|---|---|
| **0.1V** | 0-100 mVDC | -5 mVDC | 105 mVDC |
| **1V** | 0-1 VDC | -0.05 VDC | 1.05 VDC |
| **5V** | 0-5 VDC | -0.25 VDC | 5.25 VDC |
| **10V** | 0-10 VDC | -0.5 VDC | 10.5 VDC |
| • The default offset for all VDC ranges is 0-5 VDC. | | | |
| **CURR** | 0-20 mA | 0 mA | 20 mA |
| • While these are the physical limits of the current loop modules, typical applications use 2-20 or 4-20 mA for the lower and upper limits. Please specify desired range when ordering this option.<br>• The default offset for all current ranges is 0 mA.<br>• Current outputs are available only on A1-A3. | | | |

To change the output type and range, select the **ANALOG I/O CONFIGURATION** submenu from the **DIAG** Menu (see Figure 5-3) then press:

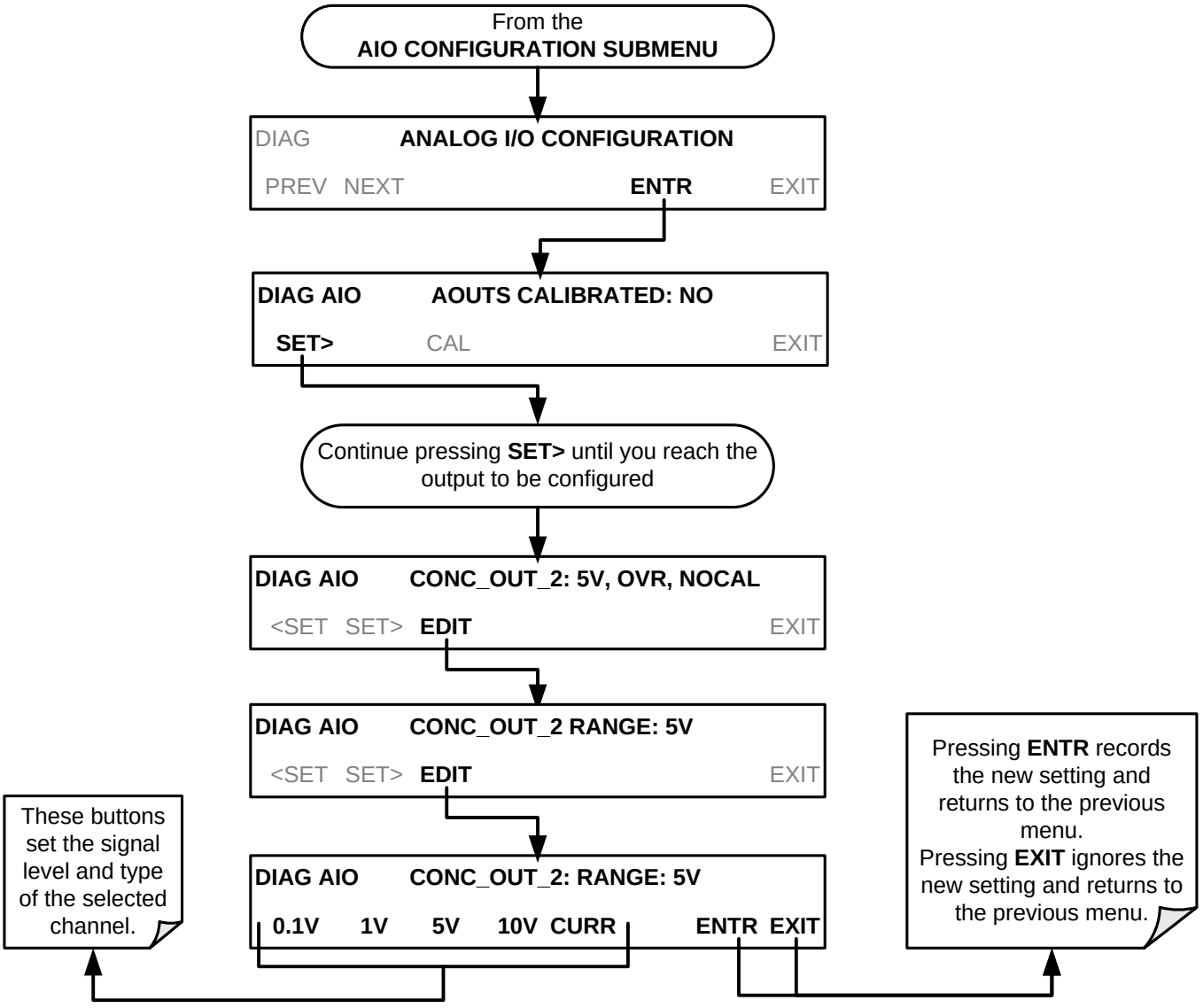

### 5.9.3.2. ANALOG OUTPUT CALIBRATION

Analog output calibration should to be carried out on first startup of the analyzer (performed in the factory as part of the configuration process) or whenever recalibration is required. The analog outputs can be calibrated automatically, either as a group or individually, or adjusted manually.

In its default mode, the instrument is configured for automatic calibration of all channels, which is useful for clearing any analog calibration warnings associated with channels that will not be used or connected to any input or recording device, e.g., datalogger.

Manual calibration should be used for the 0.1V range or in cases where the outputs must be closely matched to the characteristics of the recording device. Manual calibration requires the AUTOCAL feature to be disabled.

Automatic calibration can be performed via the **CAL** button located inside The **AOUTS CALIBRATION** submenu. By default, the analyzer is configured so that calibration of analog outputs can be initiated as a group with the **AOUT CALIBRATION** command. The outputs can also be calibrated individually, but this requires the AUTOCAL feature be disabled.

### 5.9.3.3. ENABLING OR DISABLING THE AUTOCAL FOR AN INDIVIDUAL ANALOG OUTPUT

To enable or disable the **AutoCal** feature for an individual analog output, elect the **ANALOG I/O CONFIGURATION** submenu (see Figure 5-3) then press:

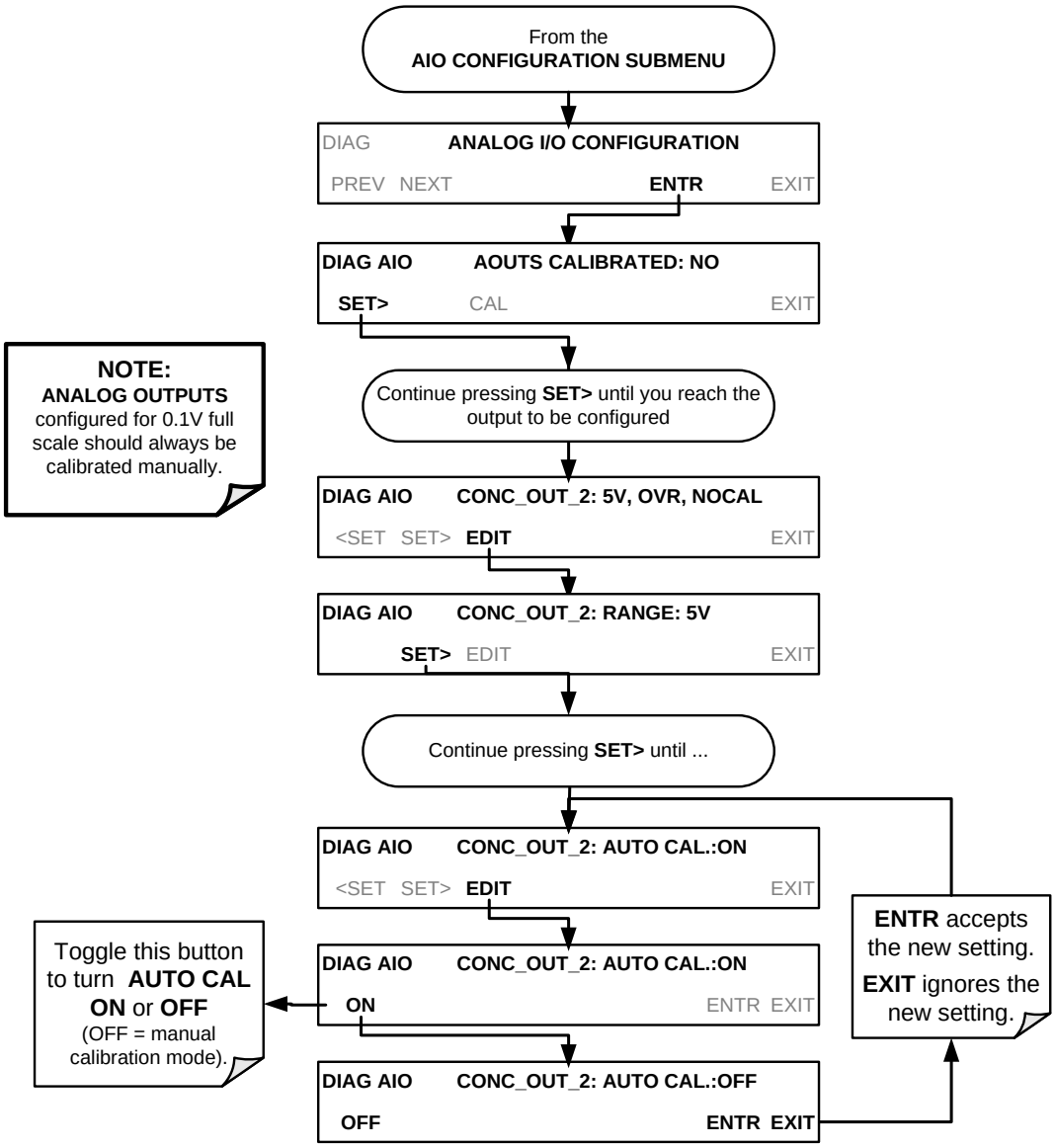
From the
AIO CONFIGURATION SUBMENU
DIAG ANALOG I/O CONFIGURATION
PREV NEXT ENTR EXIT
DIAG AIO AOUTS CALIBRATED: NO
SET> CAL EXIT
NOTE:
ANALOG OUTPUTS configured for 0.1V full scale should always be calibrated manually.
Continue pressing SET> until you reach the output to be configured
DIAG AIO CONC_OUT_2: 5V, OVR, NOCAL
<SET SET> EDIT EXIT
DIAG AIO CONC_OUT_2: RANGE: 5V
SET> EDIT EXIT
Continue pressing SET> until ...
DIAG AIO CONC_OUT_2: AUTO CAL.:ON
<SET SET> EDIT EXIT
DIAG AIO CONC_OUT_2: AUTO CAL.:ON
ON ENTR EXIT
Toggle this button to turn AUTO CAL ON or OFF (OFF = manual calibration mode).
DIAG AIO CONC_OUT_2: AUTO CAL.:OFF
OFF ENTR EXIT
ENTR accepts the new setting.
EXIT ignores the new setting.

### 5.9.3.4. AUTOMATIC CALIBRATION OF THE ANALOG OUTPUTS

To calibrate the outputs as a group with the **AOUTS CALIBRATION** command, select the **ANALOG I/O CONFIGURATION** submenu (see Figure 5-3) then press:

**IMPORTANT** **IMPACT ON READINGS OR DATA**

**Before performing this procedure, make sure that the AUTO CAL for each analog output is enabled. (See Section 5.9.3.3).**

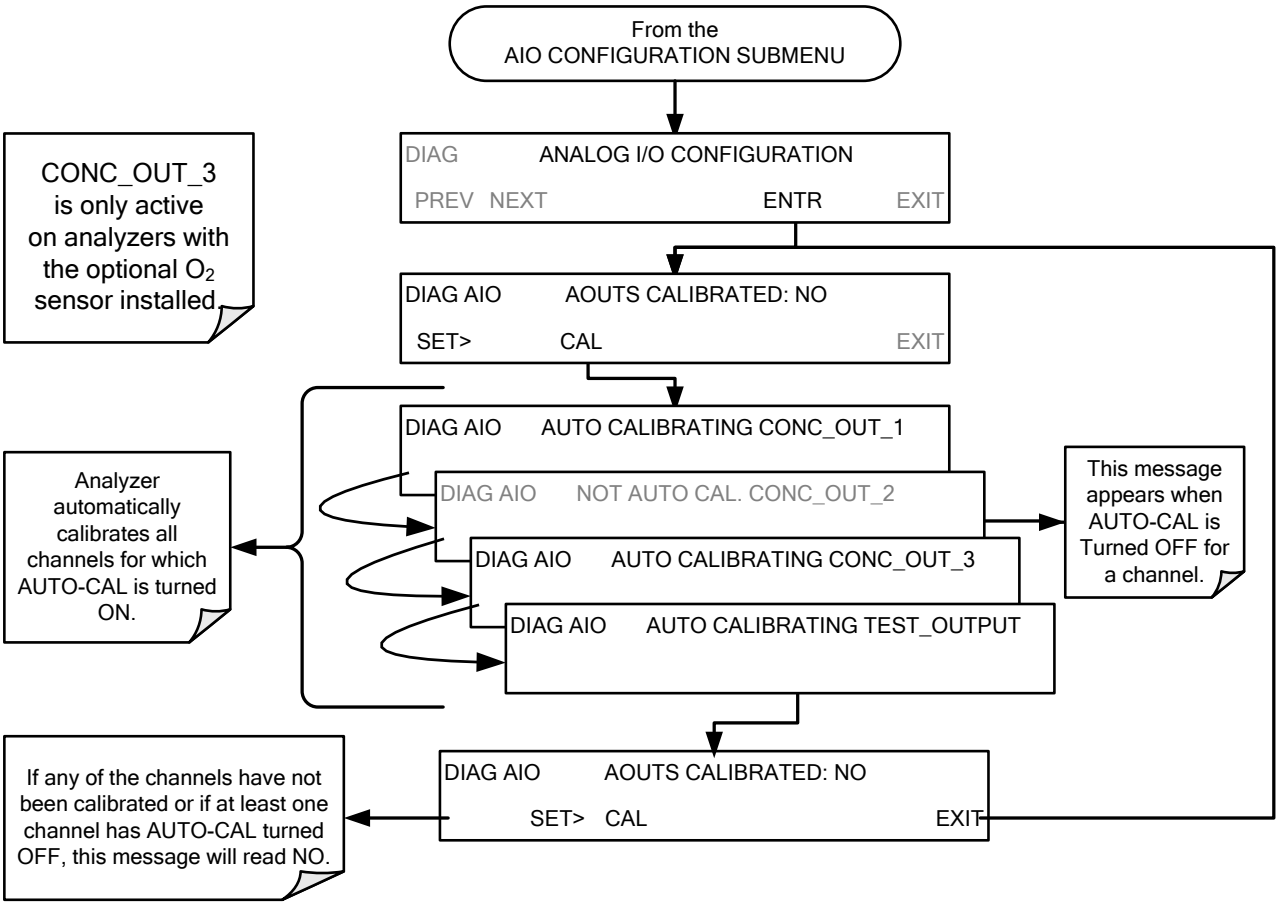


**IMPORTANT** **IMPACT ON READINGS OR DATA**

**Manual calibration should be used for any analog output set for a 0.1V output range or in cases where the outputs must be closely matched to the characteristics of the recording device.**

### 5.9.3.5. **INDIVIDUAL CALIBRATION OF THE ANALOG OUTPUTS**

To use the **AUTO CAL** feature to initiate an automatic calibration for an individual analog output, select the **ANALOG I/O CONFIGURATION** submenu (see Figure 5-3) then press:

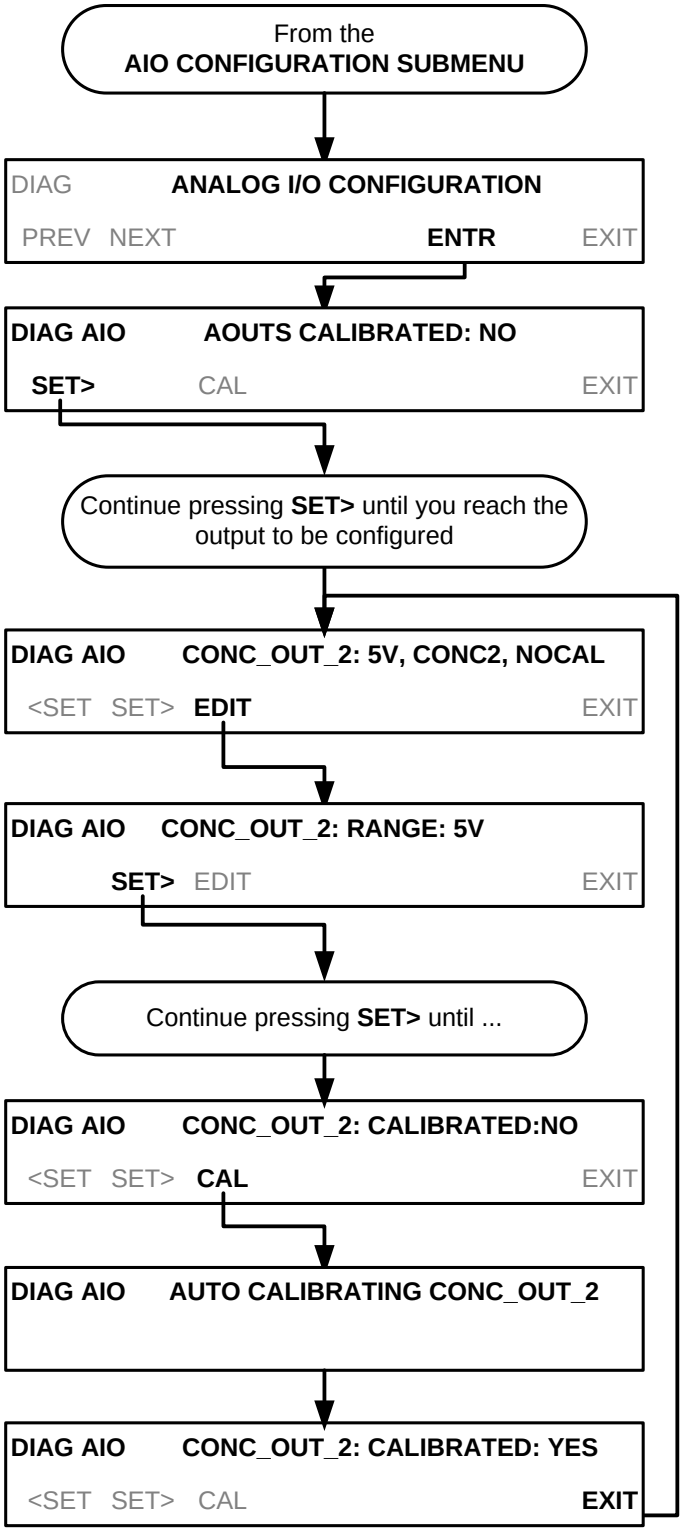

### 5.9.3.6. MANUAL CALIBRATION OF THE ANALOG OUTPUTS CONFIGURED FOR VOLTAGE RANGES

For highest accuracy, the voltages of the analog outputs can be manually calibrated.

**Note** **The menu for manually adjusting the analog output signal level will only appear if the AUTO-CAL feature is turned off for the channel being adjusted (see Section 5.9.3.3).**

Calibration is performed with a voltmeter connected across the output terminals and by changing the actual output signal level using the front panel buttons in 100, 10 or 1 count increments. See Figure 3-9 for pin assignments and diagram of the analog output connector.

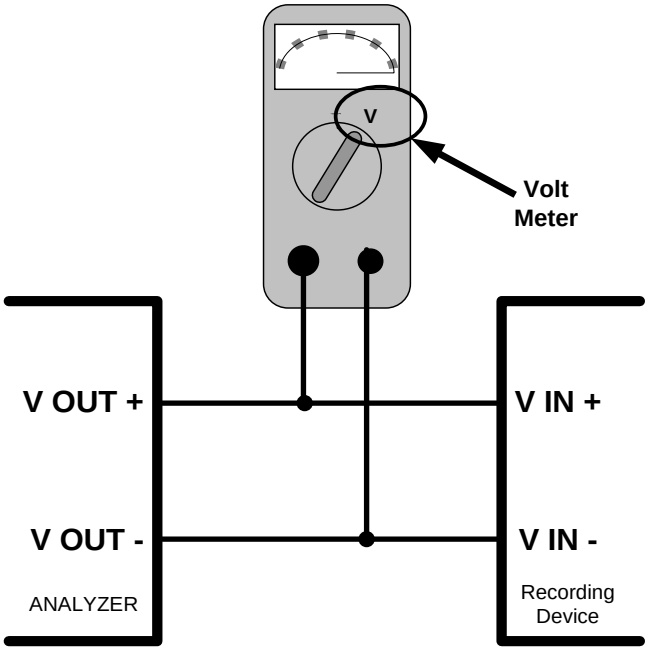


**Figure 5-4: Setup for Checking / Calibrating DCV Analog Output Signal Levels**

**Table 5-7: Voltage Tolerances for the TEST CHANNEL Calibration**

| FULL SCALE | ZERO TOLERANCE | SPAN VOLTAGE | SPAN TOLERANCE | MINIMUM ADJUSTMENT (1 count) |
|---|---|---|---|---|
| 0.1 VDC | ±0.0005V | 90 mV | ±0.001V | 0.02 mV |
| 1 VDC | ±0.001V | 900 mV | ±0.001V | 0.24 mV |
| 5 VDC | ±0.002V | 4500 mV | ±0.003V | 1.22 mV |
| 10 VDC | ±0.004V | 4500 mV | ±0.006V | 2.44 mV |

To adjust the signal levels of an analog output channel manually, select the **ANALOG I/O CONFIGURATION** submenu (see Figure 5-3) then press:

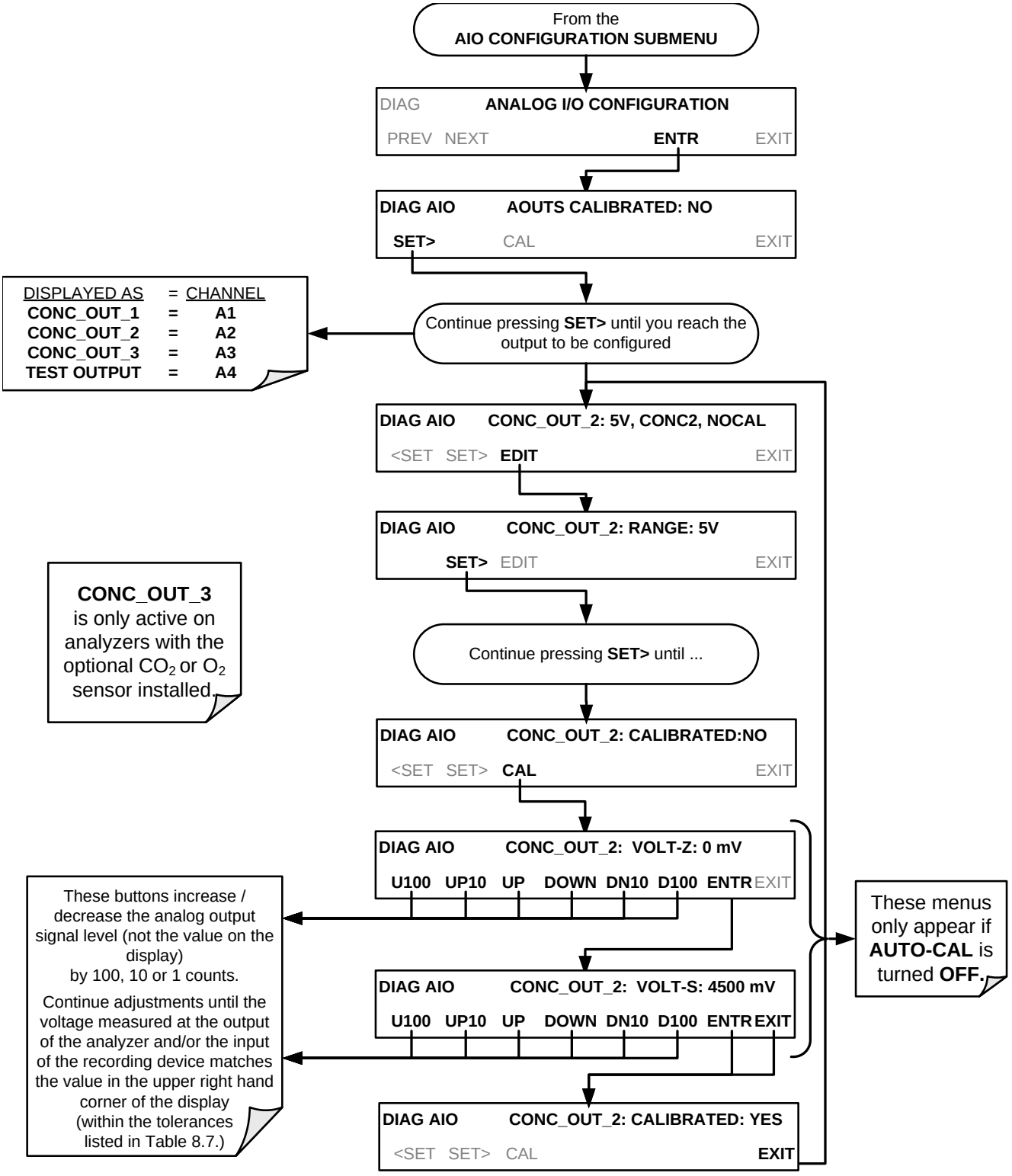

### 5.9.3.7. MANUAL ADJUSTMENT OF CURRENT LOOP OUTPUT SPAN AND OFFSET

A current loop option may be purchased for the **A1**, **A2** and **A3** analog outputs of the analyzer. This option places circuitry in series with the output of the D-to-A converter on the motherboard that changes the normal DC voltage output to a 0-20 milliamp signal (see Section 3.3.1.4).

- The outputs can be ordered scaled to any set of limits within that 0-20 mA range, however most current loop applications call for either 0-20 mA or 4-20 mA range spans.
- All current loop outputs have a +5% over range. Ranges whose lower limit is set above 1 mA also have a –5% under range.

To switch an analog output from voltage to current loop, follow the instructions in Section 5.9.3.1 (select **CURR** from the list of options on the "Output Range" menu).

Adjusting the signal zero and span levels of the current loop output is done by raising or lowering the voltage output of the D-to-A converter circuitry on the analyzer's motherboard. This raises or lowers the signal level produced by the current loop option circuitry.

The software allows this adjustment to be made in 100, 10 or 1 count increments. Since the exact amount by which the current signal is changed per D-to-A count varies from output-to-output and instrument-to-instrument, you will need to measure the change in the signal levels with a separate, current meter placed in series with the output circuit. See Figure 3-9 for pin assignments and diagram of the analog output connector.

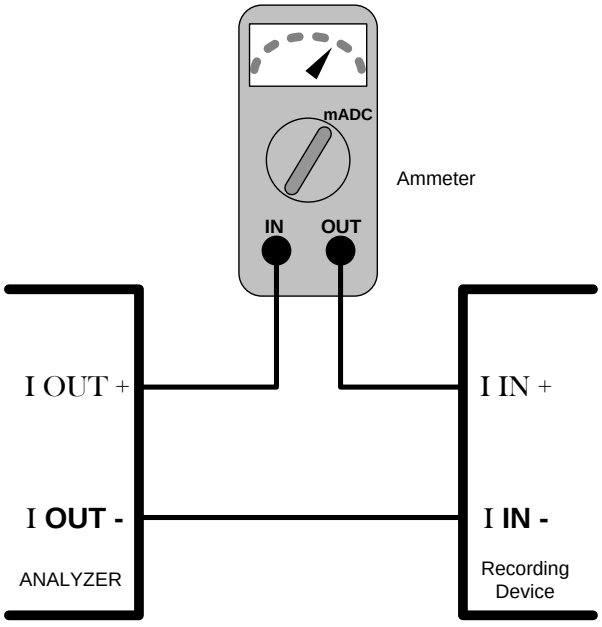


**Figure 5-5: Setup for Checking / Calibration Current Output Signal Levels Using an Ammeter**

**CAUTION**
**GENERAL SAFETY HAZARD**
**Do not exceed 60 V peak voltage between current loop outputs and instrument ground.**

To adjust the zero and span signal levels of the current outputs, select the **ANALOG I/O CONFIGURATION** submenu (see Figure 5-3) then press:

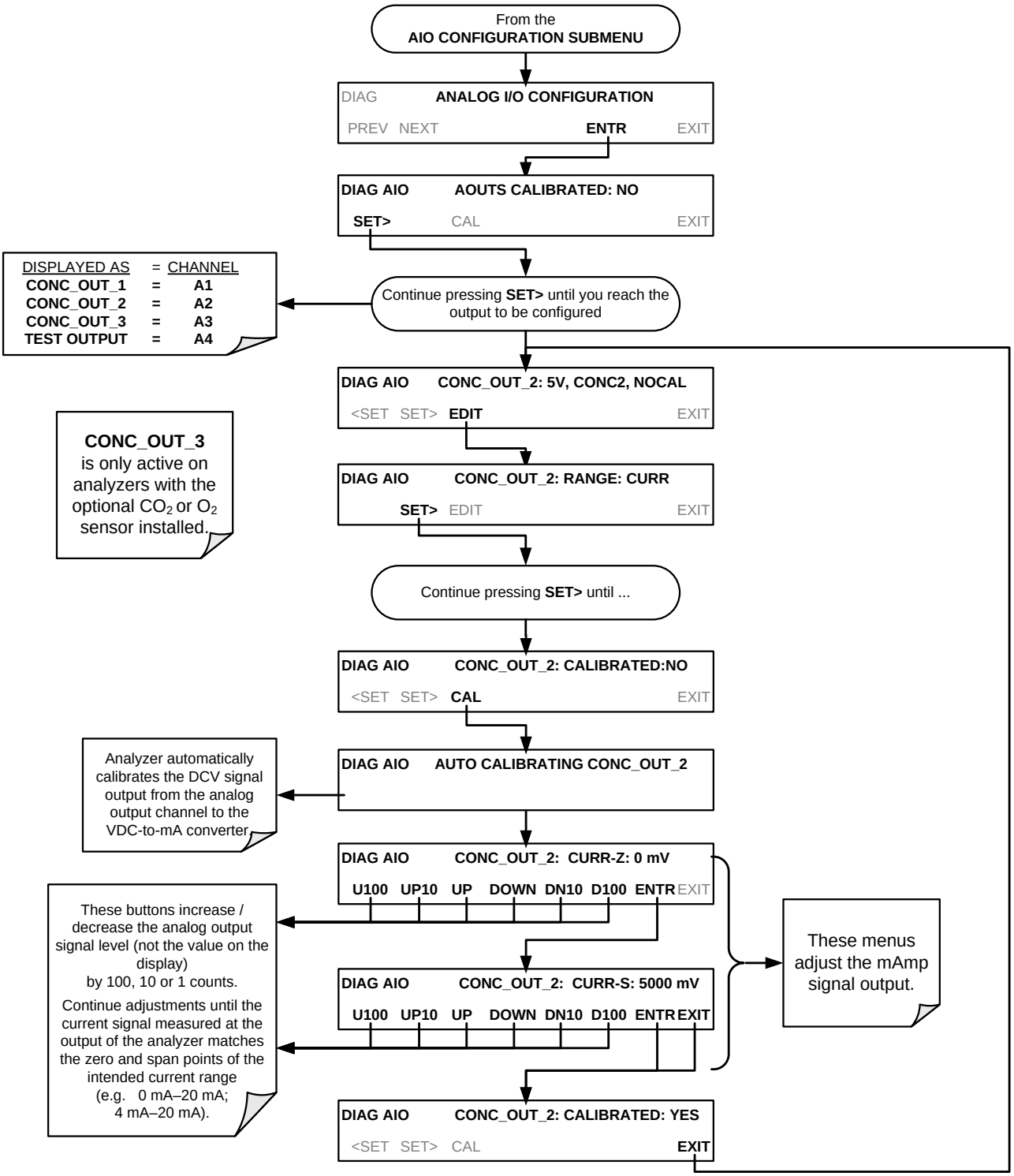

An alternative method for measuring the output of the Current Loop converter is to connect a 250 ohm ±1% resistor across the current loop output in lieu of the current meter (see Figure 3-9 for pin assignments and diagram of the analog output connector). This allows the use of a voltmeter connected across the resistor to measure converter output as VDC or mVDC.

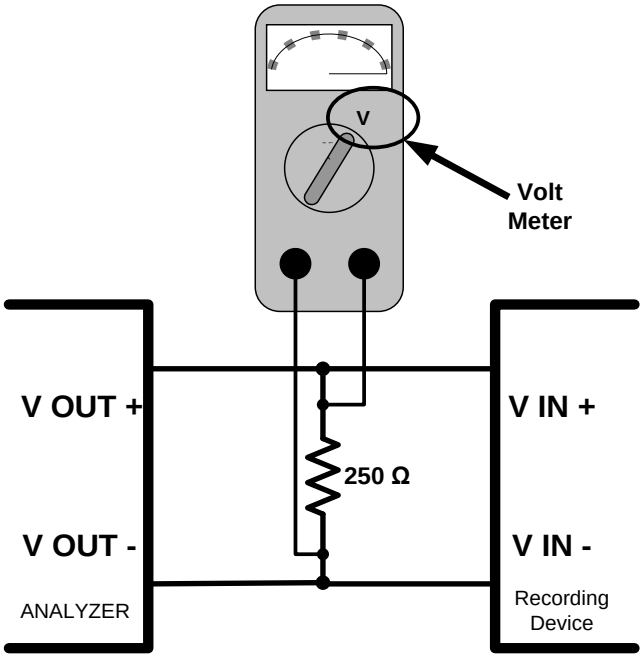


**Figure 5-6: Alternative Setup Using 250Ω Resistor for Checking Current Output Signal Levels**

In this case, follow the procedure above but adjust the output for the following values:

**Table 5-8: Current Loop Output Check**

| % FS | Voltage across Resistor for 2-20 mA | Voltage across Resistor for 4-20 mA |
|---|---|---|
| 0 | 500 mVDC | 1000 mVDC |
| 100 | 5000 mVDC | 5000 mVDC |

### 5.9.3.8. **TURNING AN ANALOG OUTPUT OVER-RANGE FEATURE ON/OFF**

In its default configuration, a ± 5% over-range is available on each of the T300/T300M Analyzer's analog outputs. This over-range can be disabled if your recording device is sensitive to excess voltage or current.

To turn the over-range feature on or off, select the **ANALOG I/O CONFIGURATION** submenu (see Figure 5-3) then press:

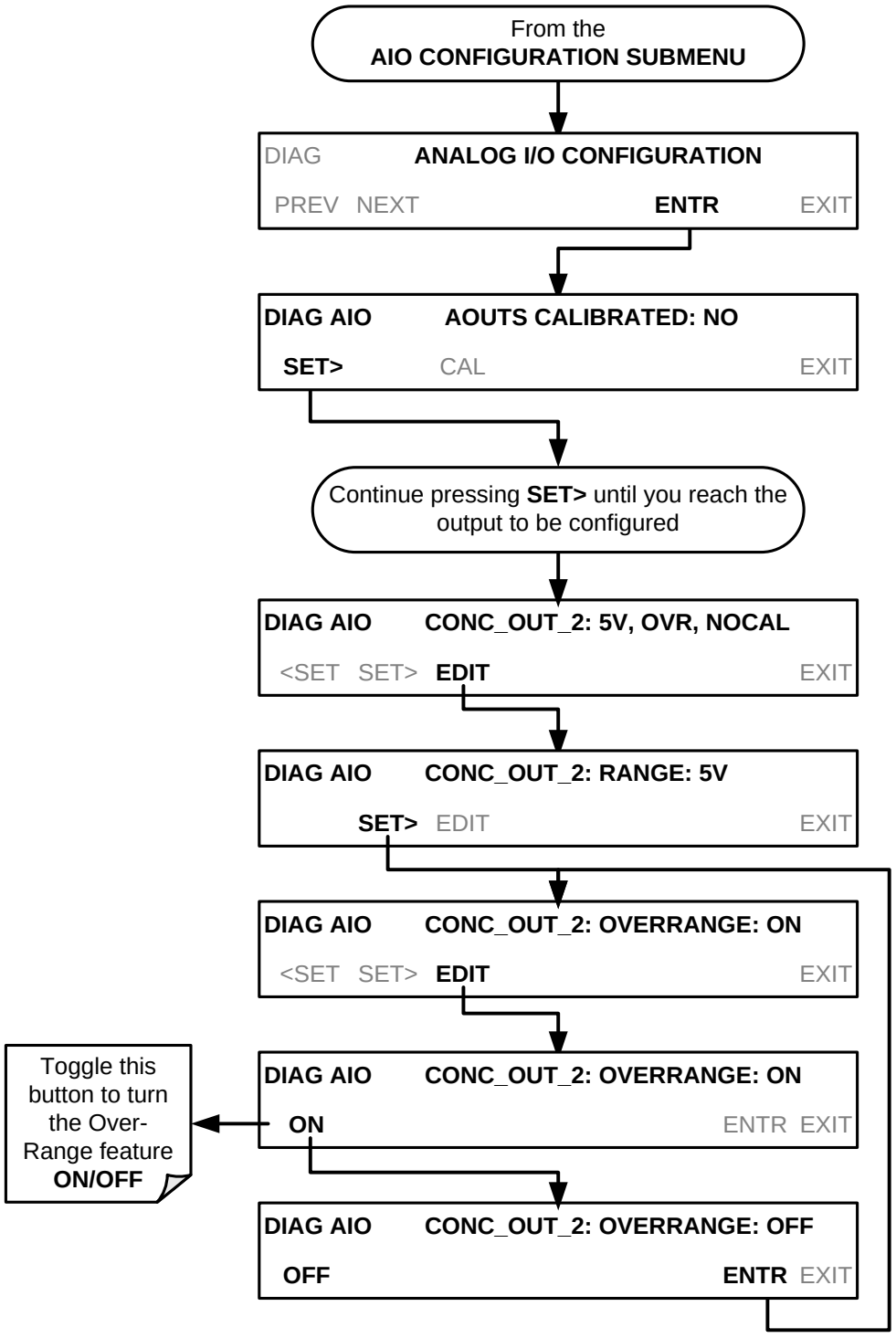

### 5.9.3.9. **ADDING A RECORDER OFFSET TO AN ANALOG OUTPUT**

Some analog signal recorders require that the zero signal is significantly different from the baseline of the recorder in order to record slightly negative readings from noise around the zero point. This can be achieved in the T300/T300M by defining a zero offset, a small voltage (e.g., 10% of span).

To add a zero offset to a specific analog output channel, select the **ANALOG I/O CONFIGURATION** submenu (see Figure 5-3) then press:

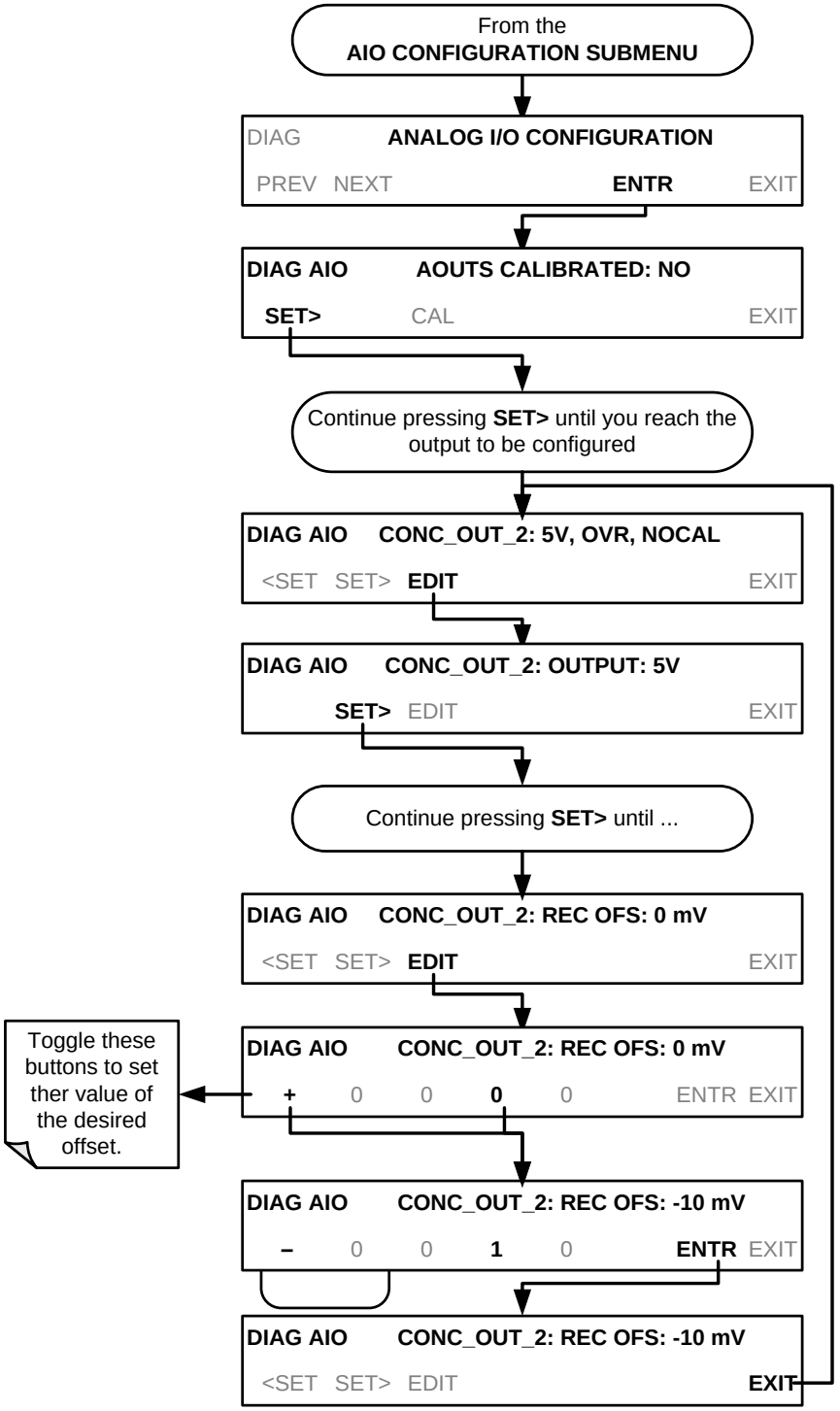

### 5.9.3.10. **AIN CALIBRATION**

This is the submenu to conduct a calibration of the T300/T300M Analyzer's analog inputs. This calibration should only be necessary after major repair such as a replacement of CPU, motherboard or power supplies.

To perform an analog input calibration, select the **ANALOG I/O CONFIGURATION** submenu (see Figure 5-3) then press:

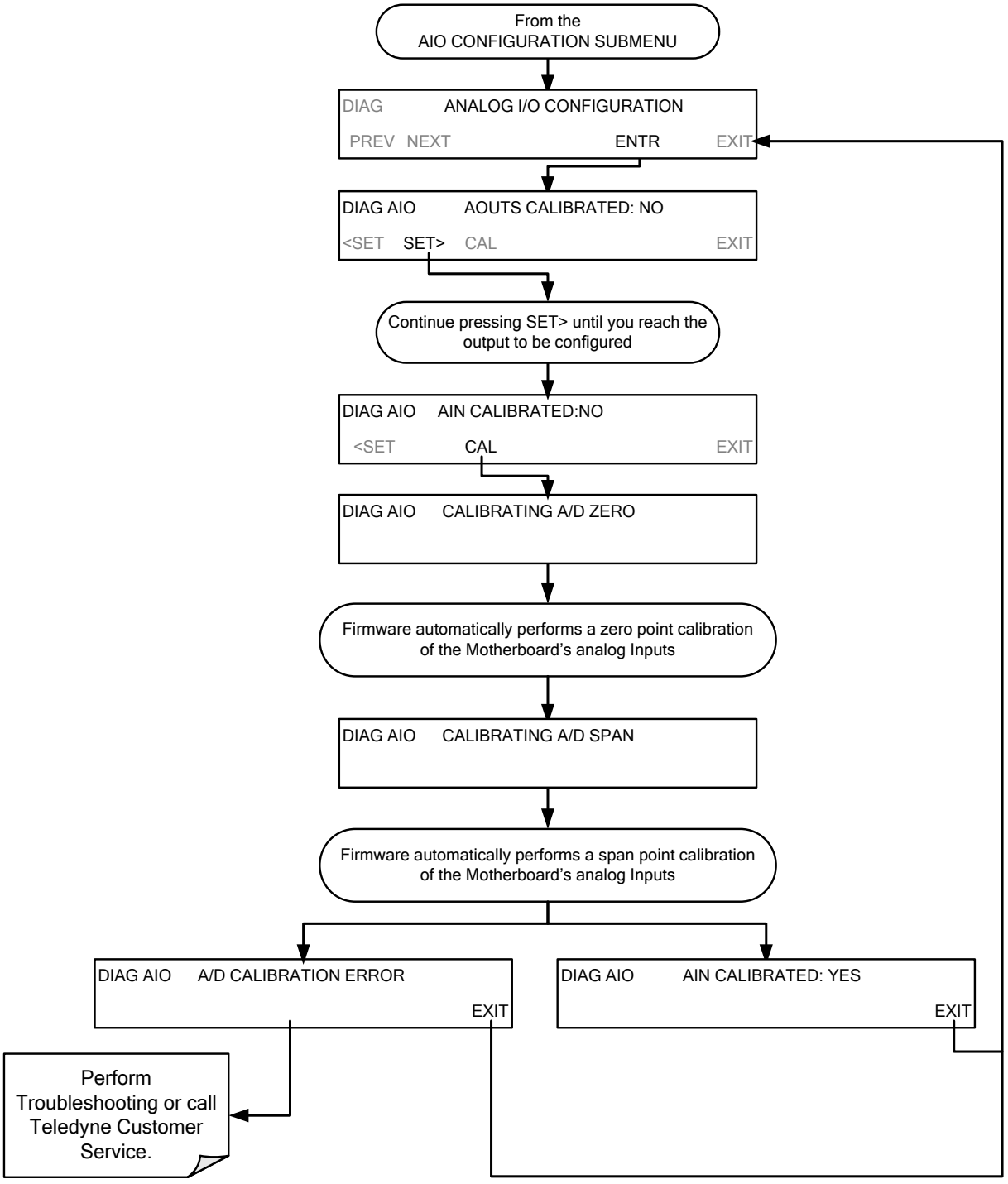

### 5.9.3.11. **ANALOG INPUTS (XIN1…XIN8) OPTION CONFIGURATION**

To configure the analyzer's external analog inputs option, define for each channel**:**

- gain (number of units represented by 1 volt)
- offset (volts)
- engineering units to be represented in volts (each press of the touchscreen button scrolls the list of alphanumeric characters from A-Z and 0-9)
- whether to display the channel in the Test functions

To access and adjust settings for the external Analog Inputs option channels press:

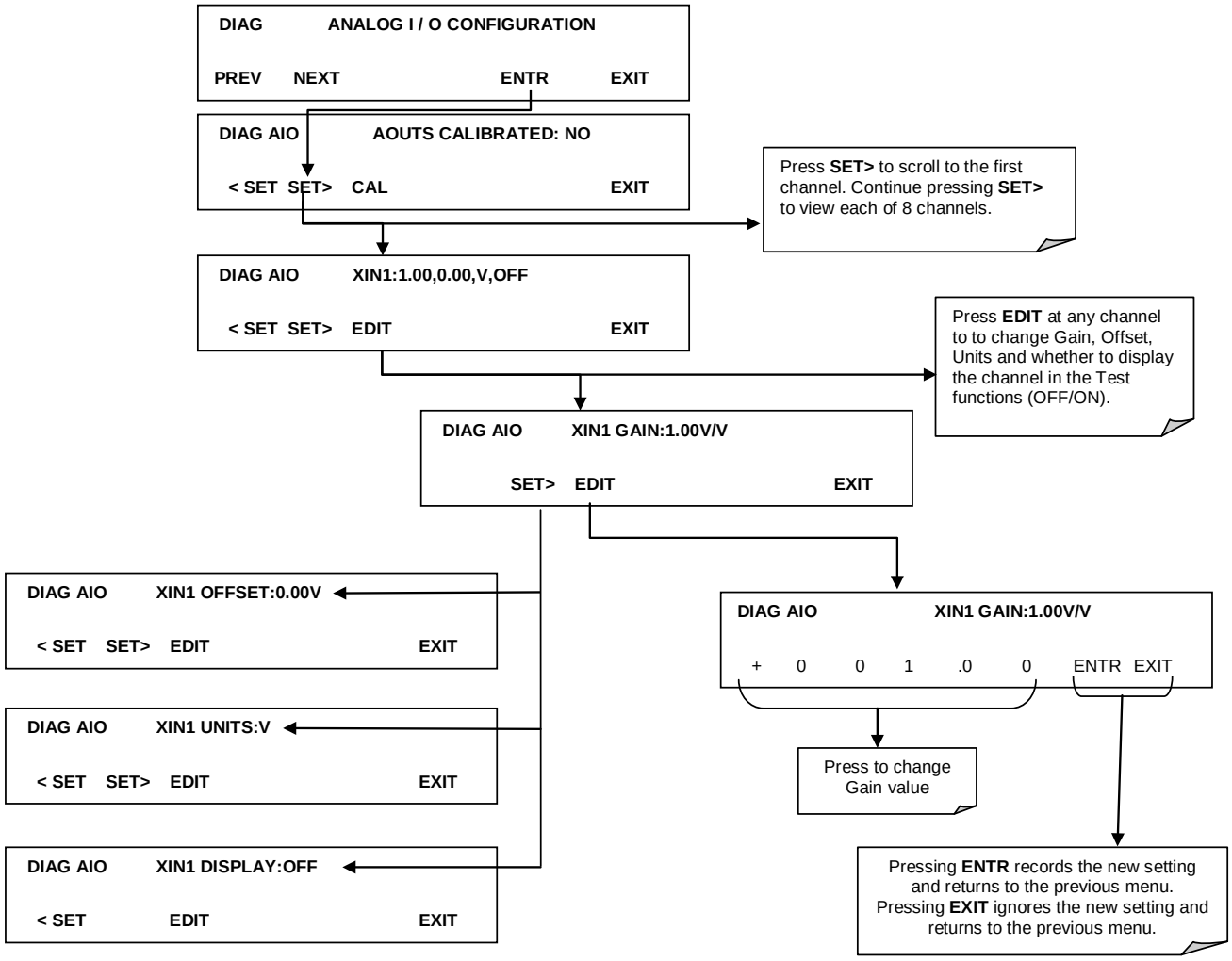


Figure 5-7. DIAG – Analog Inputs (Option) Configuration Menu

## 5.9.4. **ELECTRICAL TEST**

The electrical test function creates a current, which substitutes the PMT signal, and feeds it into the preamplifier board. This signal is generated by circuitry on the pre-amplifier board itself and tests the filtering and amplification functions of that assembly along with the A/D converter on the motherboard. It does not test the PMT itself. (See also Section 12.5.7.2).

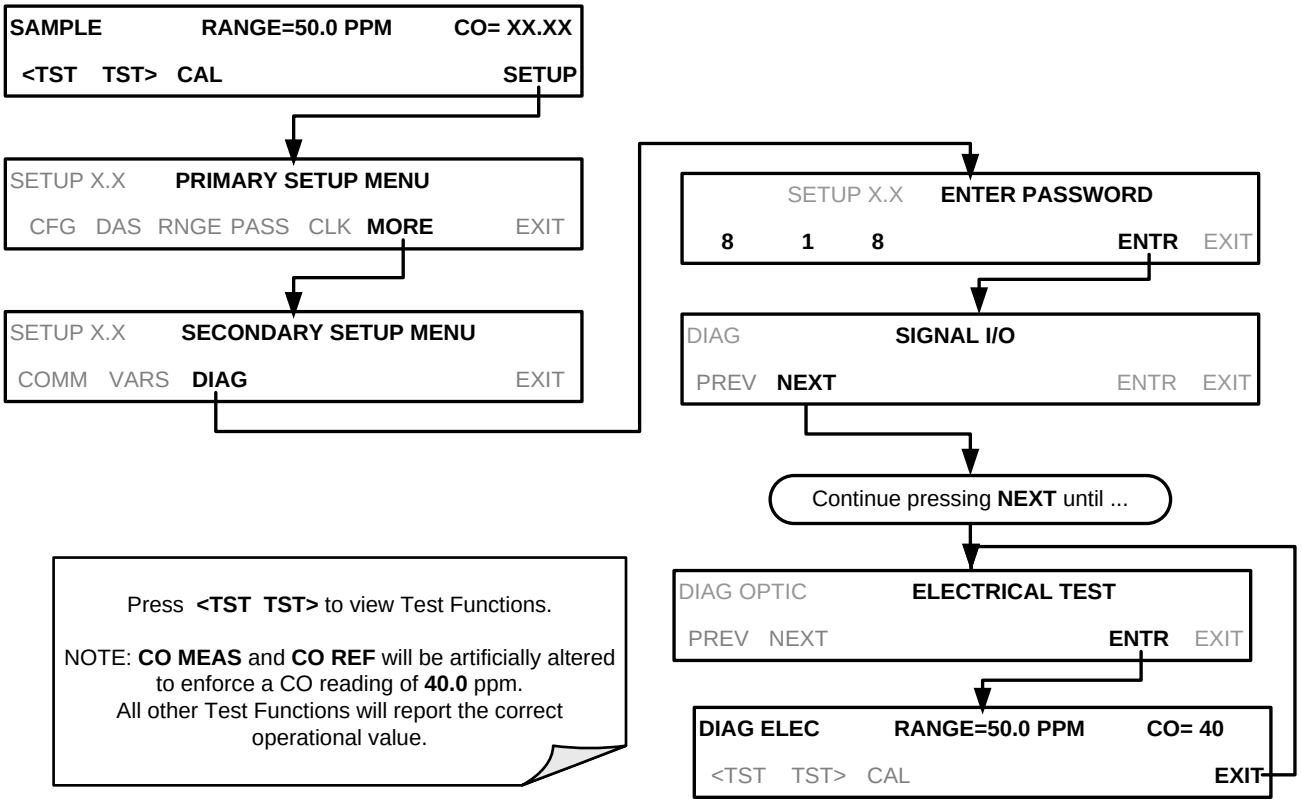


## 5.9.5. **DARK CALIBRATION**

The dark calibration test interrupts the signal path between the IR photo-detector and the remainder of the sync/demod board circuitry. This allows the instrument to compensate for any voltage levels inherent in the sync/demod circuitry that might affect the calculation of CO concentration. For details see Section 9.6.1.

## 5.9.6. **PRESSURE CALIBRATION**

A sensor at the exit of the sample chamber continuously measures the pressure of the sample gas. The data are used to compensate the final CO concentration calculation for changes in atmospheric pressure and are stored in the CPU's memory as the test function **PRES** (also viewable via the front panel). For details see Section 9.6.2.

## 5.9.7. FLOW CALIBRATION

The flow calibration allows the user to adjust the values of the sample flow rates as they are displayed on the front panel and reported through COMM ports to match the actual flow rate measured at the sample inlet. This does not change the hardware measurement of the flow sensors, only the software-calculated values. For details see Section 9.6.3.

## 5.9.8. TEST CHAN OUTPUT

When activated, output channel **A4** can be used in the standard configuration to report one of the test functions viewable from the SAMPLE mode display. (See also Section 12.5.8.2).

### 5.9.8.1. SELECTING A TEST CHANNEL FUNCTION FOR OUTPUT A4

The test functions available to be reported are listed in Table 5-9:

**Table 5-9: Test Channels Functions available on the T300/T300M's Analog Output**

| TEST CHANNEL | DESCRIPTION | ZERO | FULL SCALE * |
|---|---|---|---|
| **NONE** | *TEST CHANNEL IS TURNED OFF.* | | |
| **CO MEASURE** | The demodulated, peak IR detector output during the measure portion of the GFC Wheel cycle. | 0 mV | 5000 mV |
| **CO REFERENCE** | The demodulated, peak IR detector output during the reference portion of the GFC Wheel cycle. | 0 mV | 5000 mV |
| **SAMPLE PRESSURE** | The absolute pressure of the Sample gas as measured by a pressure sensor located inside the sample chamber. | 0 "Hg | 40 "Hg |
| **SAMPLE FLOW** | Sample mass flow rate as measured by the flow rate sensor in the sample gas stream. | 0 $cm^3/m$ | 1000 $cm^3/m$ |
| **SAMPLE TEMP** | The temperature of the gas inside the sample chamber. | 0°C | 70°C |
| **BENCH TEMP** | Optical bench temperature. | 0°C | 70°C |
| **WHEEL TEMP** | GFC Wheel temperature. | 0°C | 70°C |
| **$O_2$ CELL TEMP[1]** | The current temperature of the $O_2$ sensor measurement cell. | n | 70°C |
| **CHASSIS TEMP** | The temperature inside the analyzer chassis. | 0°C | 70°C |
| **PHT DRIVE** | The drive voltage being supplied to the thermoelectric coolers of the IR photo-detector by the Sync/Demod Board. | 0 mV | 5000 mV |

* Maximum test signal value at full scale of test channel output.

[1] When option installed.

Once a function is selected, the instrument not only begins to output a signal on the analog output, but also adds **TEST** to the list of test functions viewable via the front panel display.

To activate the **TEST** Channel and select the **CO MEASURE** function, press:

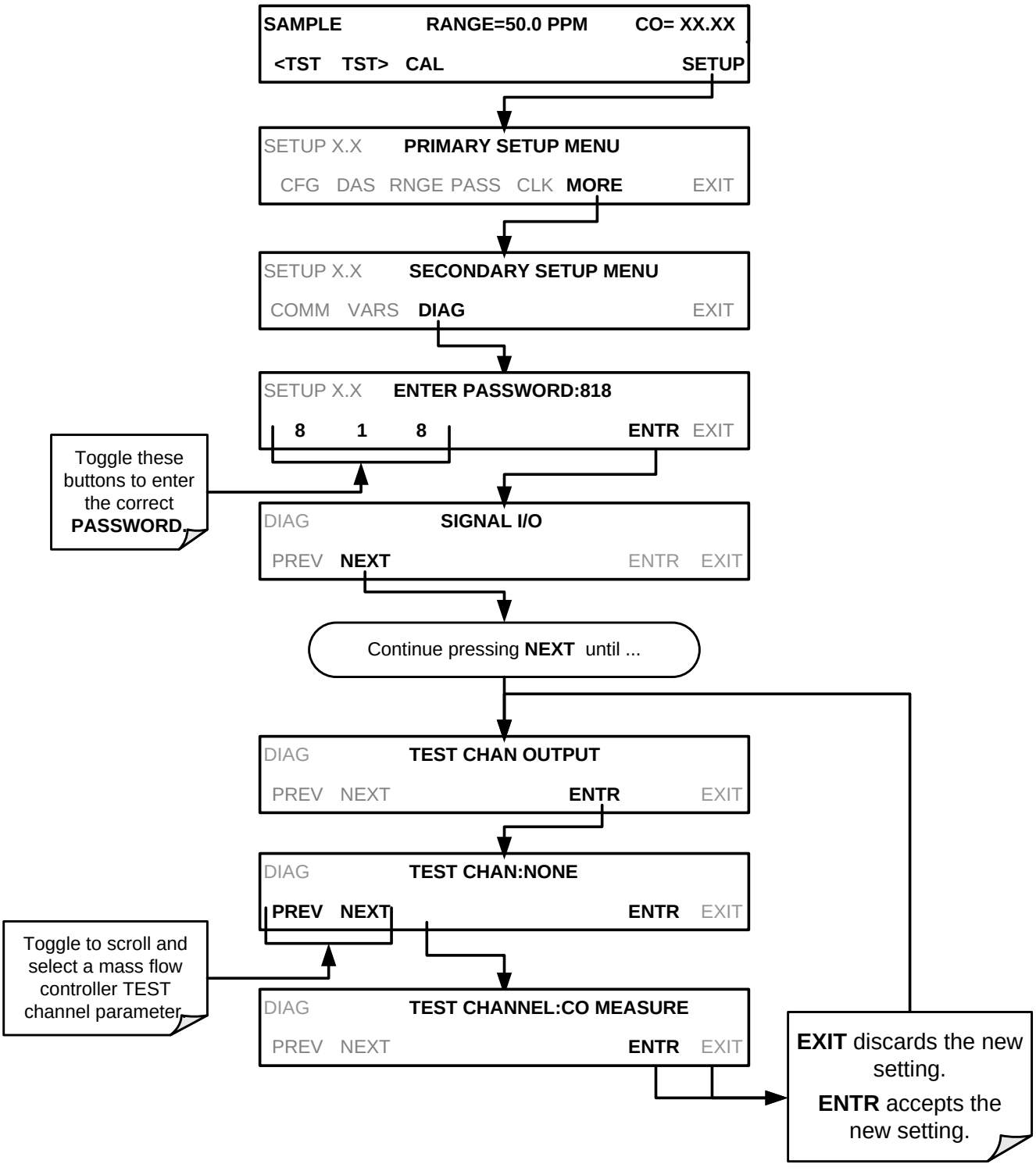

# 5.10. SETUP →MORE → ALRM (OPTION): USING THE GAS CONCENTRATION ALARMS

The T300/T300M includes two CO concentration alarms if OPT 61 is installed on your instrument. Each alarm has a user settable limit, and is associated with a Single Pole Double Throw relay output accessible via the alarm output connector on the instrument's back panel (See Section 3.3.1.4). If the CO concentration measured by the instrument rises above that limit, the alarm's status output relay is closed.

The default settings for **ALM1** and **ALM2** are:

**Table 5-10: CO Concentration Alarm Default Settings**

| ALARM | STATUS | LIMIT SET POINT[1] |
|---|---|---|
| alm1 | Disabled | 100 ppm |
| alm2 | Disabled | 300 ppm |

[1]Set points listed are for PPM. Should the reporting range units of measure be changed (See Section 5.4.3) the analyzer will automatically scale the set points to match the new range unit setting.

**Note** **To prevent the concentration alarms from activating during span calibration operations ensure that the CAL or CALS button is pressed prior to introducing span gas into the analyzer.**

## 5.10.1. SETTING THE T300 CONCENTRATION ALARM LIMITS

To enable either of the CO concentration alarms and set the limit points, press:

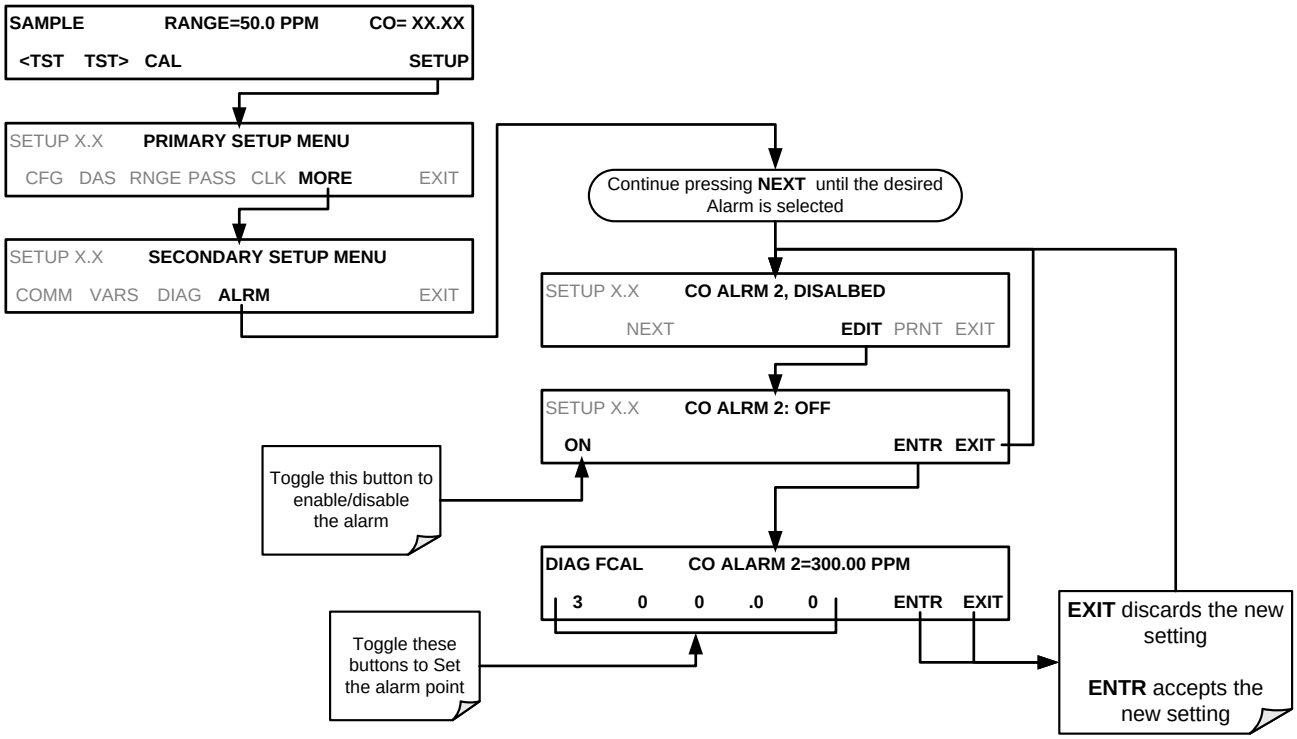

This page intentionally left blank.

# 6. COMMUNICATIONS SETUP AND OPERATION

This instrument rear panel connections include an Ethernet port, a USB port (option) and two serial communications ports (labeled RS232, which is the COM1 port, and COM2) located on the rear panel (refer to Figure 3-4). These ports give the user the ability to communicate with, issue commands to, and receive data from the analyzer through an external computer system or terminal.

This section provides pertinent information regarding communication equipment, describes the instrument's communications modes, presents configuration instructions for the communications ports, and provides instructions for their use, including communications protocol. Data acquisition is presented in Section 7.

## 6.1. DATA TERMINAL/COMMUNICATION EQUIPMENT (DTE DCE)

RS-232 was developed for allowing communications between data terminal equipment (DTE) and data communication equipment (DCE). Basic terminals always fall into the DTE category whereas modems are always considered DCE devices. The difference between the two is the pin assignment of the Data Receive and Data Transmit functions.

- DTE devices receive data on pin 2 and transmit data on pin 3.
- DCE devices receive data on pin 3 and transmit data on pin 2.

To allow the analyzer to be used with terminals (DTE), modems (DCE) and computers (which can be either), a switch mounted below the serial ports on the rear panel allows the user to set the RS-232 configuration for one of these two data devices. This switch exchanges the Receive and Transmit lines on RS-232 emulating a cross-over or null-modem cable. The switch has no effect on COM2.

## 6.2. COMMUNICATION MODES, BAUD RATE AND PORT TESTING

Use the SETUP>MORE>COMM menu to configure COM1 (labeled **RS232** on instrument rear panel) and/or COM2 (labeled **COM2** on instrument rear panel) for communication modes, baud rate and/or port testing for correct connection. If using a USB option communication connection, setup requires configuring the COM2 baud rate (Section 6.2.2).

## 6.2.1. COMMUNICATION MODES

Either of the analyzer's serial ports (**RS232** or **COM2** on rear panel) can be configured to operate in a number of different modes, which are described in Table 6-1. As modes are selected, the analyzer sums the mode ID numbers and displays this combined number on the front panel display. For example, if quiet mode (01), computer mode (02) and Multidrop-Enabled mode (32) are selected, the analyzer would display a combined **MODE ID** of **35**.

**Table 6-1: COMM Port Communication Modes**

| MODE[1] | ID | DESCRIPTION |
|---|---|---|
| **QUIET** | **1** | Quiet mode suppresses any feedback from the analyzer (such as warning messages) to the remote device and is typically used when the port is communicating with a computer program where such intermittent messages might cause communication problems. Such feedback is still available but a command must be issued to receive them. |
| **COMPUTER** | **2** | Computer mode inhibits echoing of typed characters and is used when the port is communicating with a computer operated control program. |
| **HESSEN PROTOCOL** | **16** | The Hessen communications protocol is used in some European countries. TAPI P/N 02252 contains more information on this protocol. |
| **E, 8, 1** | **8192** | When turned on this mode switches the **COMM** port settings from<br>● **NO PARITY;** 8 data bits; 1 stop bit to **EVEN PARITY**; 8 data bits; 1 stop bit. |
| **E, 7, 1** | **2048** | When turned on this mode switches the **COM** port settings from<br>● **NO PARITY; 8 DATA BITS**; 1 stop bit to **EVEN PARITY; 7 DATA BITS**; 1 stop bit. |
| **RS-485** | **1024** | Configures the **COM2** Port for RS-485 communication. RS-485 mode has precedence over multidrop mode if both are enabled. |
| **SECURITY** | **4** | When enabled, the serial port requires a password before it will respond (see Section 5.5). If not logged on, the only active command is the '?' request for the help screen. |
| **MULTIDROP PROTOCOL** | **32** | Multidrop protocol allows a multi-instrument configuration on a single communications channel. Multidrop requires the use of instrument IDs. |
| **ENABLE MODEM** | **64** | Enables to send a modem initialization string at power-up. Asserts certain lines in the RS-232 port to enable the modem to communicate. |
| **ERROR CHECKING[2]** | **128** | Fixes certain types of parity errors at certain Hessen protocol installations. |
| **XON/XOFF HANDSHAKE[2]** | **256** | Disables XON/XOFF data flow control also known as software handshaking. |
| **HARDWARE HANDSHAKE** | **8** | Enables CTS/RTS style hardwired transmission handshaking. This style of data transmission handshaking is commonly used with modems or terminal emulation protocols as well as by Teledyne Instrument's APICOM software. |
| **HARDWARE FIFO[2]** | **512** | Disables the **HARDWARE FIFO** (First In – First Out). When FIFO is enabled it improves data transfer rate for that COM port. |
| **COMMAND PROMPT** | **4096** | Enables a command prompt when in terminal mode. |

[1] Modes are listed in the order in which they appear in the **SETUP → MORE → COMM → COM[1 OR 2] → MODE** menu

[2] The default setting for this feature is **ON.** Do not disable unless instructed to by Teledyne API's Customer Service personnel.

Communication Modes for each COM port must be configured independently. To turn on or off the communication modes for either COM1 or COM2, access the SETUP>MORE>[COM1 or COM2] menu and at the COM1[2] Mode menu press EDIT.

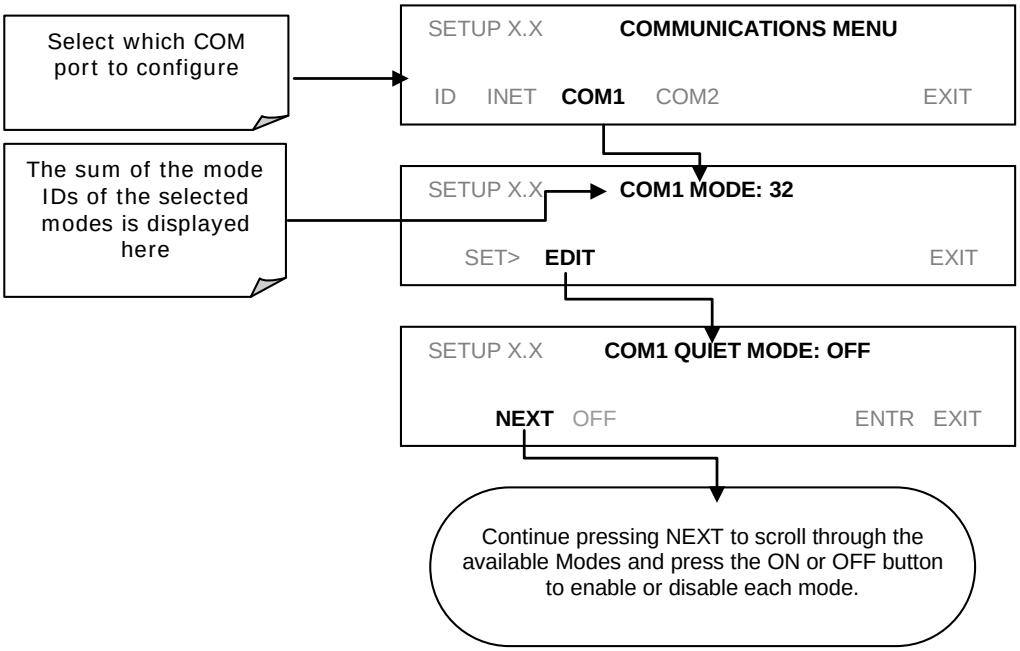


**Figure 6-1: COM1[2] – Communication Modes Setup**

## 6.2.2. **COM PORT BAUD RATE**

To select the baud rate of either COM Port, go to SETUP>MORE>COMM and select either COM1 or COM2 as follows (use COM2 to view/match your personal computer baud rate when using the USB port, Section 6.6):

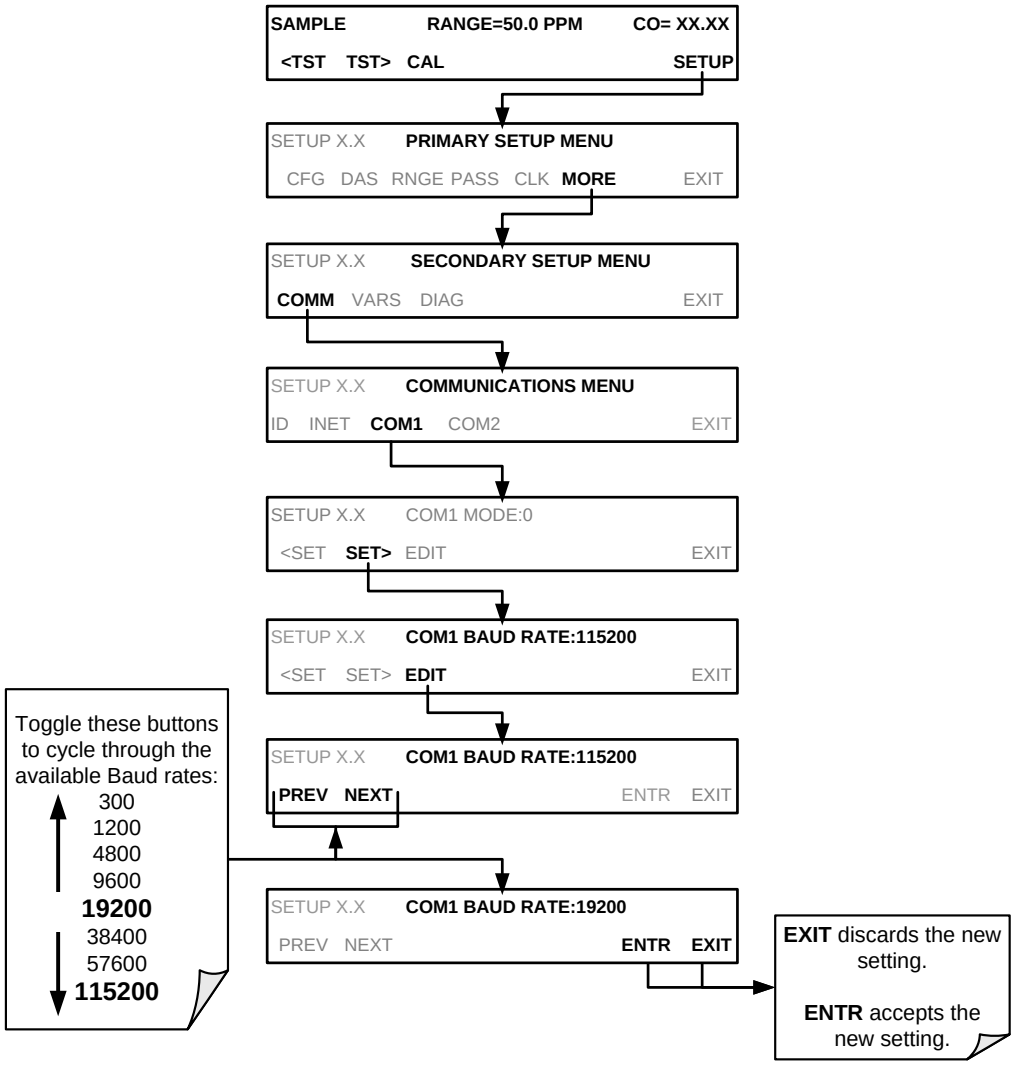


**Figure 6-2: COMM Port Baud Rate**

### 6.2.3. **COM PORT TESTING**

The serial ports can be tested for correct connection and output in the **COMM** menu. This test sends a string of 256 'w' characters to the selected COM port. While the test is running, the red LED labeled TX for that COM port on the instrument's rear panel analyzer should flicker.

To initiate the test, access the COMMUNICATIONS Menu (SETUP>MORE>COMM), then press:

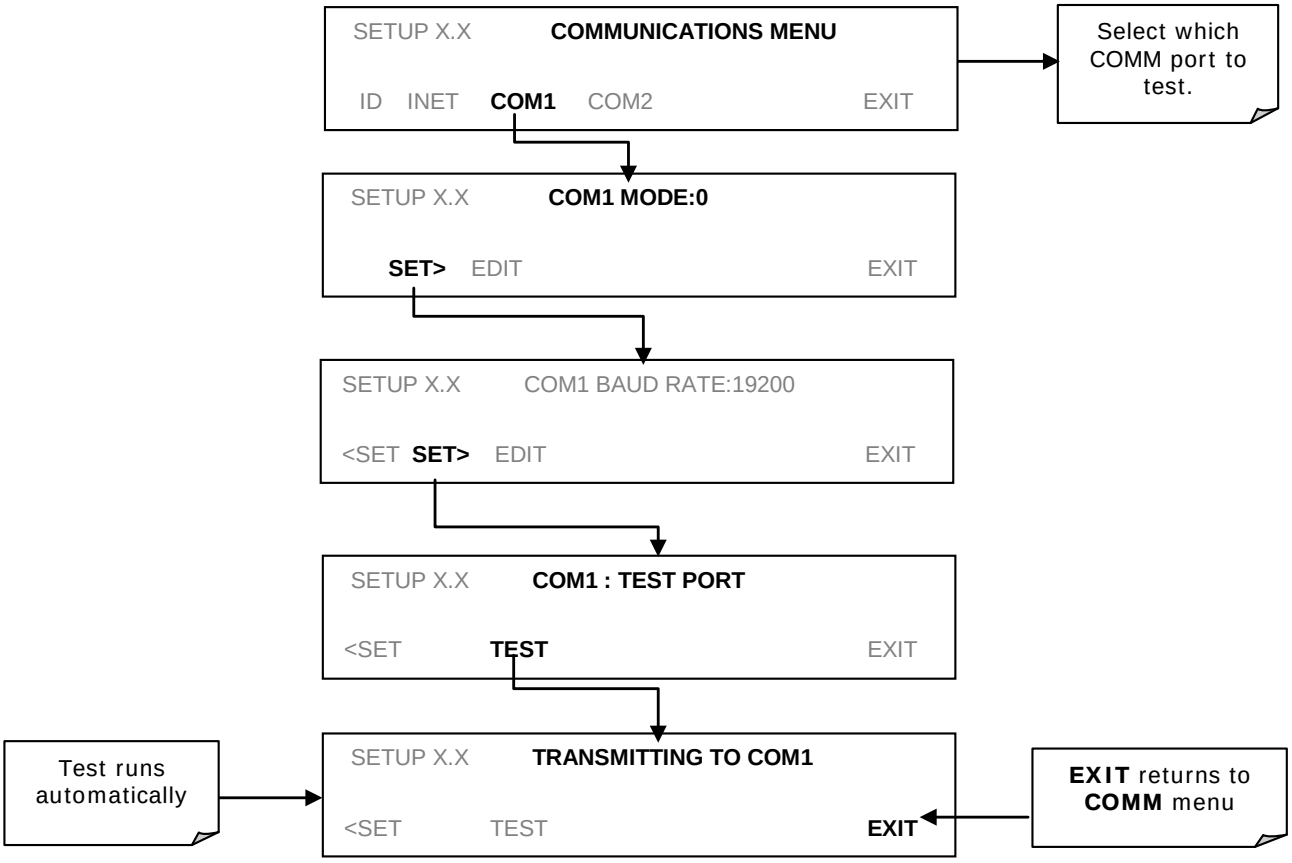


**Figure 6-3: COMM – COM1 Test Port**

## 6.3. RS-232

The RS232 and COM2 communications (COMM) ports operate on the RS-232 protocol (default configuration). Possible configurations for these two COMM ports are summarized as follows:

- RS232 port can also be configured to operate in single or RS-232 Multidrop mode (Option 62); refer to Sections 3.3.1.8 and 5.7.1.
- COM2 port can be left in its default configuration for standard RS-232 operation including multidrop, or it can be reconfigured for half-duplex RS-485 operation (please contact the factory for this configuration).

Note that when the rear panel **COM2** port is in use, except for multidrop communication, the rear panel USB port cannot be used. (Alternatively, when the USB port is enabled, **COM2** port cannot be used except for multidrop).

A Code-Activated Switch (CAS), can also be used on either port to connect typically between 2 and 16 send/receive instruments (host computer(s) printers, data loggers, analyzers, monitors, calibrators, etc.) into one communications hub. Contact Teledyne API Sales for more information on CAS systems.

To assist in properly connecting the serial ports to either a computer or a modem, there are activity indicators just above the RS-232 port. Once a cable is connected between the analyzer and a computer or modem, both the red and green LEDs should be on.

- If the lights are not lit, use small switch on the rear panel to switch it between DTE and DCE modes.
- If both LEDs are still not illuminated, make sure the cable properly constructed.

To configure the analyzer's communication ports, use the SETUP>MORE>COMM menu. Refer to Section 5.7.3 for initial setup.

## 6.4. RS-485 (OPTION)

The COM2 port of the instrument's rear panel is set up for RS-232 communication but can be reconfigured for RS-485 communication. Contact Customer Service. If this option was elected at the time of purchase, the rear panel was preconfigured at the factory. Choosing this option disallows use of the USB port.

## 6.5. ETHERNET

When using the Ethernet interface, the analyzer can be connected to any standard 10BaseT or 100BaseT Ethernet network via low-cost network hubs, switches or routers. The interface operates as a standard TCP/IP device on port 3000. This allows a remote computer to connect through the network to the analyzer using APICOM, terminal emulators or other programs.

The Ethernet cable connector on the rear panel has two LEDs indicating the Ethernet's current operating status.

**Table 6-2: Ethernet Status Indicators**

| LED | FUNCTION |
|---|---|
| amber (link) | On when connection to the LAN is valid. |
| green (activity | Flickers during any activity on the LAN. |

The analyzer is shipped with DHCP enabled by default. This allows the instrument to be connected to a network or router with a DHCP server. The instrument will automatically be assigned an IP address by the DHCP server (Section 6.5.2). This configuration is useful for quickly getting an instrument up and running on a network. However, for permanent Ethernet connections, a static IP address should be used. Section 6.5.1 below details how to configure the instrument with a static IP address.

## 6.5.1. CONFIGURING ETHERNET COMMUNICATION MANUALLY (STATIC IP ADDRESS)

To configure Ethernet communication manually:

1. Connect a cable from the analyzer's Ethernet port to a Local Area Network (LAN) or Internet port.
2. From the analyzer's front panel touchscreen, access the Communications Menu (SETUP>MORE>COMM).
3. Enter the Ethernet menu (INET), follow the setup sequence as shown in Figure 6-4, and edit the Instrument and Gateway IP addresses and Subnet Mask to the desired settings.

Alternatively, from the computer, enter the same information through an application such as HyperTerminal.

Table 6-3 shows the default Ethernet configuration settings.

**Table 6-3: LAN/Internet Default Configuration Properties**

| PROPERTY | DEFAULT STATE | DESCRIPTION |
|---|---|---|
| **DHCP** | ON | This displays whether the DHCP is turned ON or OFF. Press EDIT and toggle ON for automatic configuration after first consulting network administrator. |
| **INSTRUMENT IP ADDRESS** | | This string of four packets of 1 to 3 numbers each (e.g. 192.168.76.55.) is the address of the analyzer itself. |
| **GATEWAY IP ADDRESS** | 0.0.0.0 | Can only be edited when DHCP is set to OFF.<br>A string of numbers very similar to the Instrument IP address (e.g. 192.168.76.1.) that is the address of the computer used by your LAN to access the Internet. |
| **SUBNET MASK** | 0.0.0.0 | Can only be edited when DHCP is set to OFF.<br>Also a string of four packets of 1 to 3 numbers each (e.g. 255.255.252.0) that identifies the LAN to which the device is connected.<br>All addressable devices and computers on a LAN must have the same subnet mask. Any transmissions sent to devices with different subnets are assumed to be outside of the LAN and are routed through the gateway computer onto the Internet. |
| **TCP PORT**[1] | 3000 | This number defines the terminal control port by which the instrument is addressed by terminal emulation software, such as Internet or Teledyne API's APICOM. |
| **HOST NAME** | [initially blank] | The name by which your analyzer will appear when addressed from other computers on the LAN or via the Internet. To change, see Section 6.5.3. |

[1] Do not change the setting for this property unless instructed to by Teledyne API's Customer Service personnel.

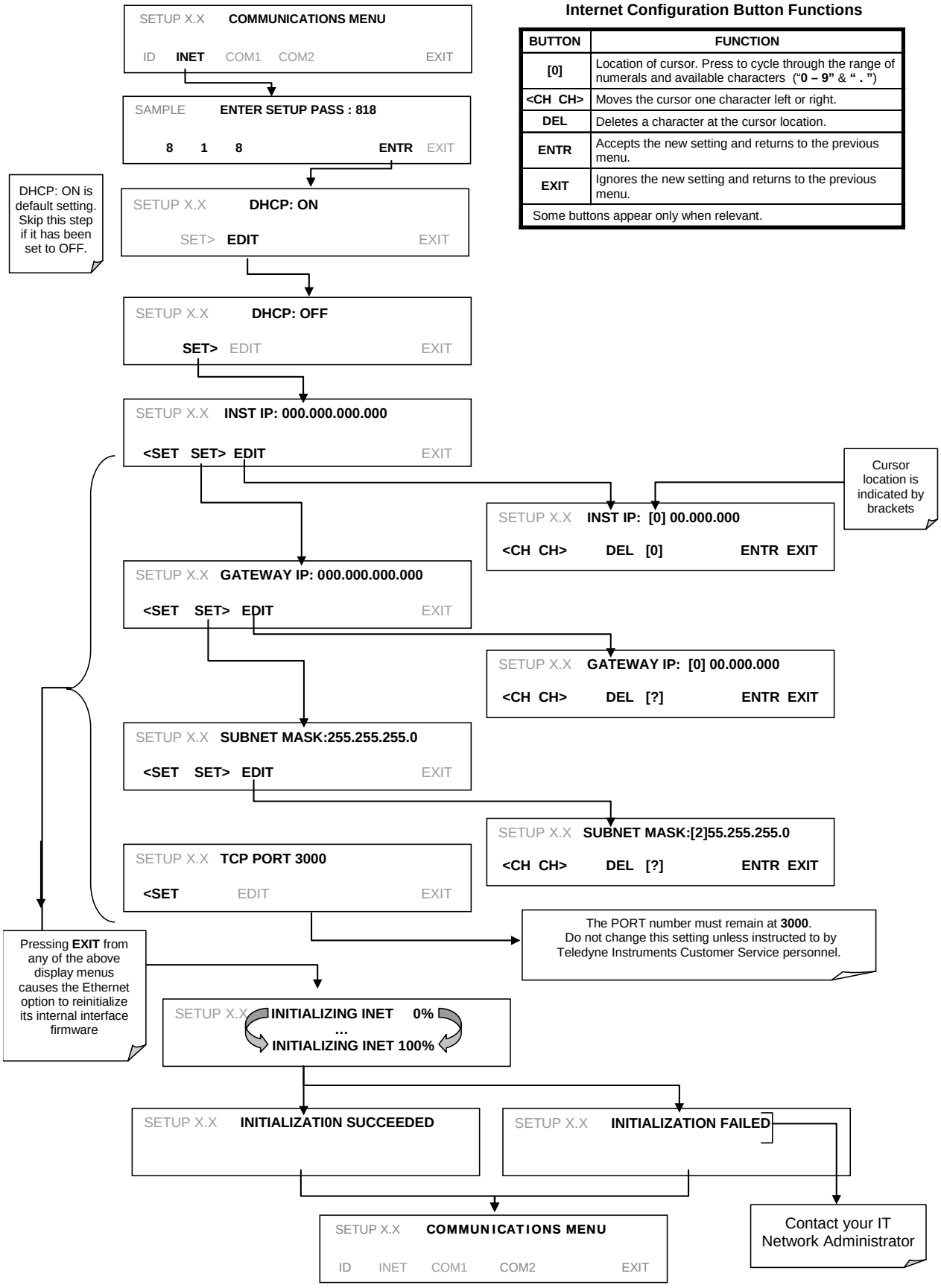


**Internet Configuration Button Functions**

| BUTTON | FUNCTION |
|---|---|
| [0] | Location of cursor. Press to cycle through the range of numerals and available characters ("**0 – 9**" & " **.** ") |
| <CH CH> | Moves the cursor one character left or right. |
| DEL | Deletes a character at the cursor location. |
| ENTR | Accepts the new setting and returns to the previous menu. |
| EXIT | Ignores the new setting and returns to the previous menu. |
| Some buttons appear only when relevant. | |

Figure 6-4: COMM – LAN / Internet Manual Configuration

## 6.5.2. CONFIGURING ETHERNET COMMUNICATION USING DYNAMIC HOST CONFIGURATION PROTOCOL (DHCP)

The default Ethernet setting is DHCP.

1. See your network administrator to affirm that your network server is running DHCP.
2. Access the Communications Menu (SETUP>MORE>COMM) and follow the setup sequence as shown in Figure 6-5.

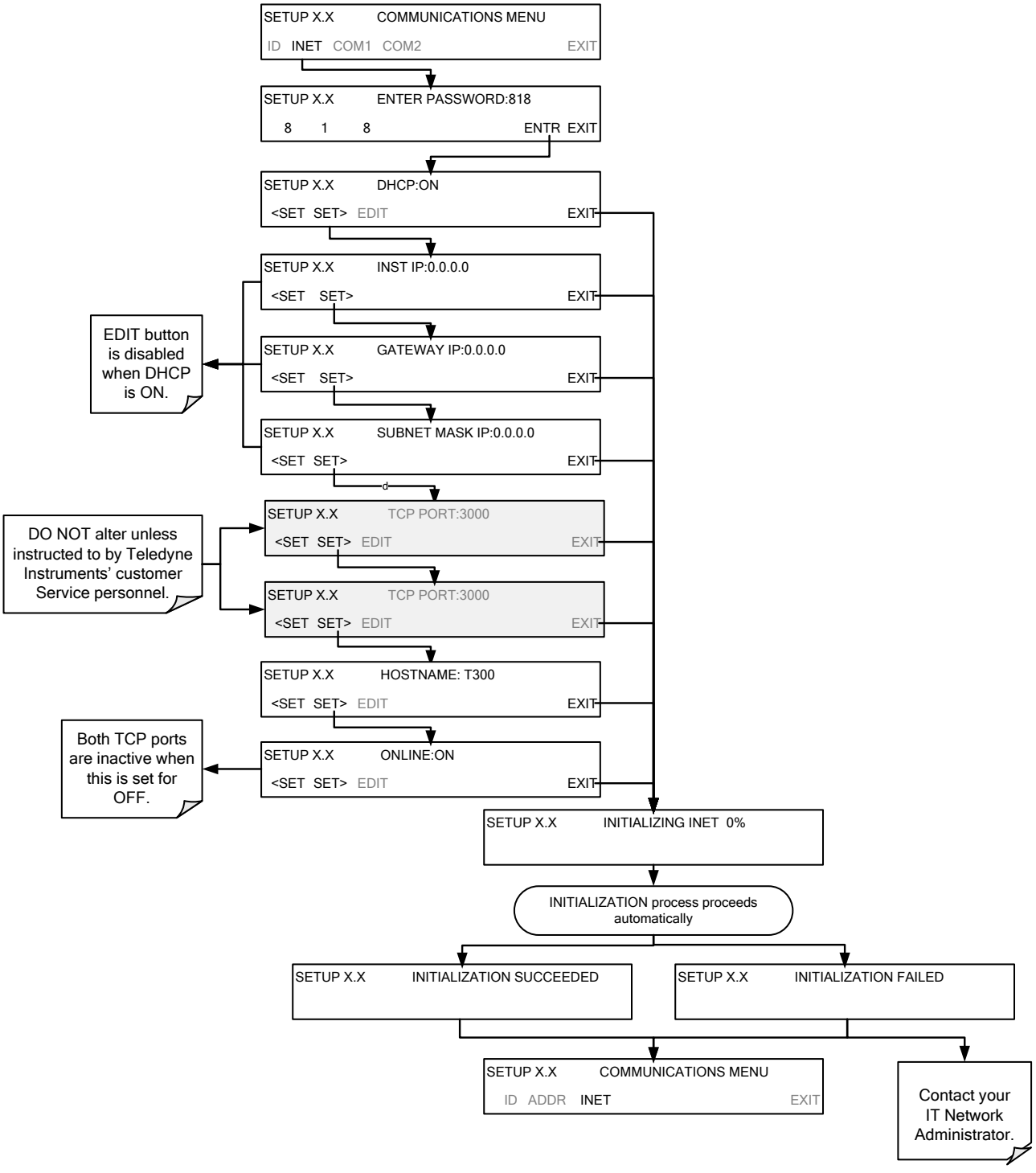


**Figure 6-5 : COMM – LAN / Internet Automatic Configuration (DHCP)**

## 6.5.3. CHANGING THE ANALYZER'S HOSTNAME

The **HOSTNAME** is the name by which the analyzer appears on your network. The default name for all Teledyne API's T300 analyzers is **T300**. To change this name (particularly if you have more than one T300/T300M Analyzer on your network), press:

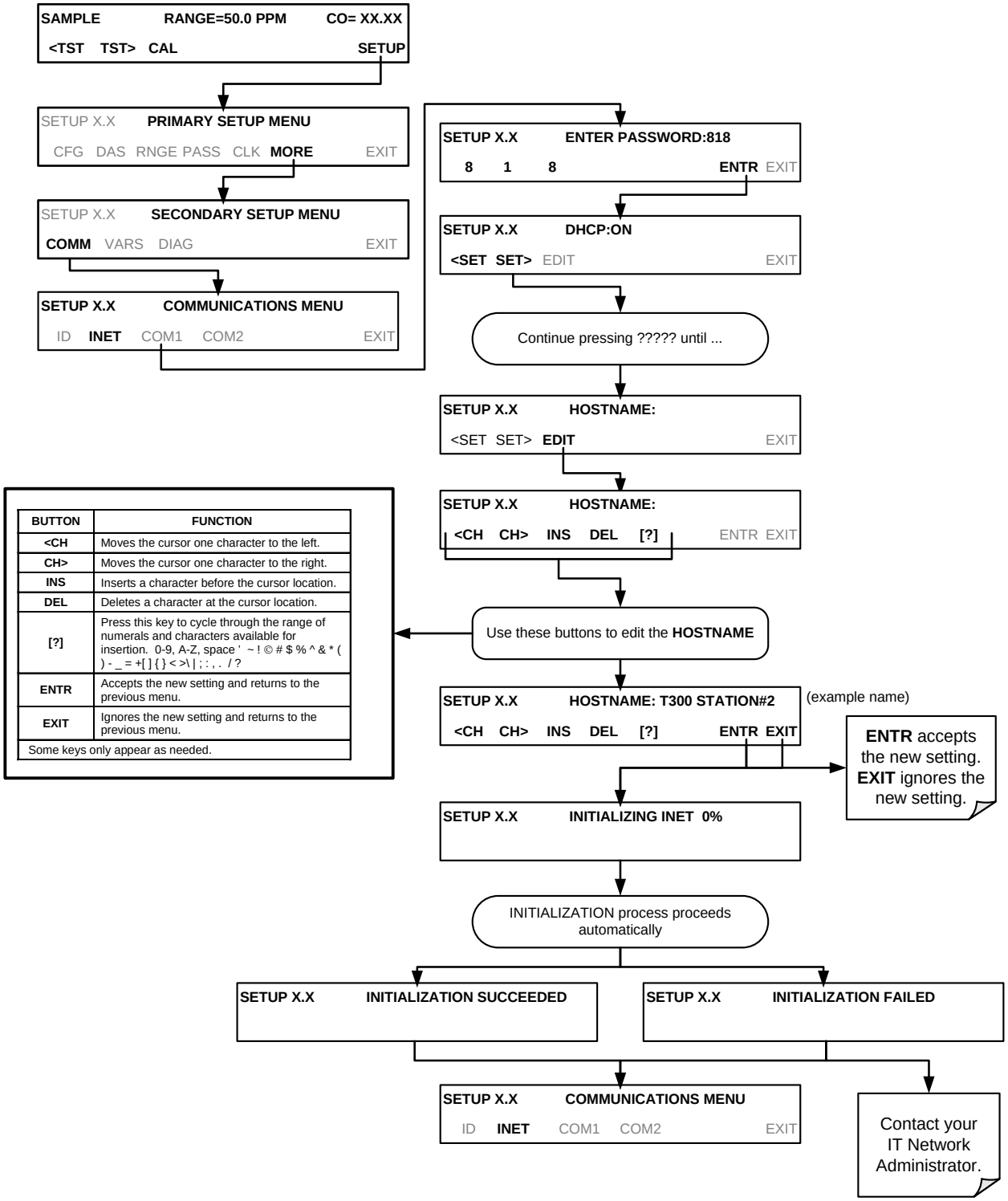

# 6.6. USB PORT (OPTION) FOR REMOTE ACCESS

The analyzer can be operated through a personal computer by downloading the TAPI USB driver and directly connecting their respective USB ports.

1. Install the Teledyne T-Series USB driver on your computer, downloadable from the Teledyne API website under Help Center>Software Downloads (www.teledyne-api.com/software).
2. Run the installer file: "TAPIVCPInstaller.exe"

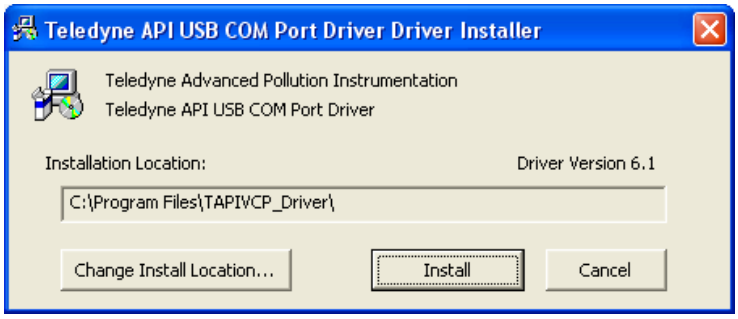


3. Connect the USB cable between the USB ports on your personal computer and your analyzer. The USB cable should be a Type A – Type B cable, commonly used as a USB printer cable.
4. Determine the Windows XP Com Port number that was automatically assigned to the USB connection. (Start → Control Panel → System → Hardware → Device Manager). This is the com port that should be set in the communications software, such as APIcom or Hyperterminal.

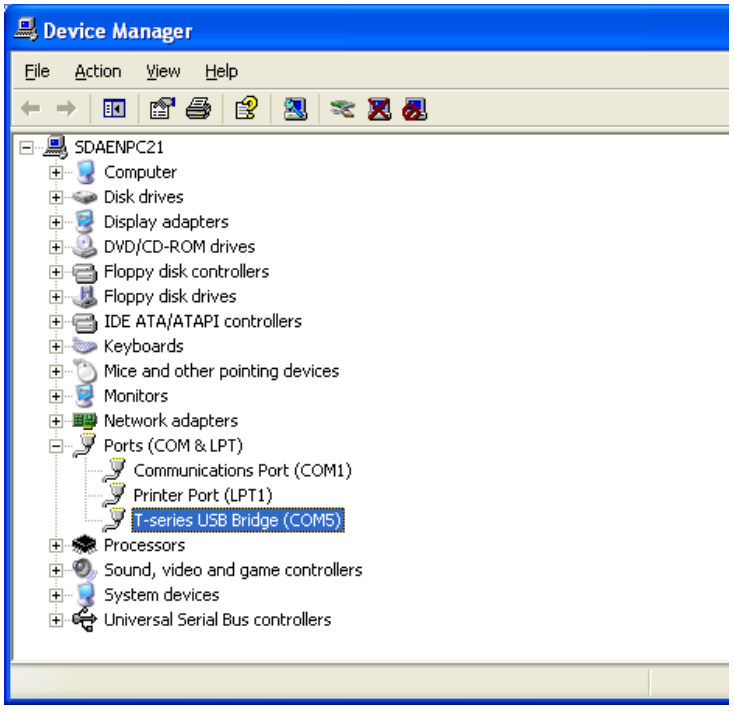


Refer to the Quick Start (*Direct Cable Connection*) section of the Teledyne APIcom Manual, PN 07463.

5. In the instrument's SETUP>MORE>COMM>COM2 menu, make the following settings:

   Baud Rate: 115200
   COM2 Mode Settings:

| | |
|---|---|
| Quiet Mode | ON |
| Computer Mode | ON |
| MODBUS RTU | OFF |
| MODBUS ASCII | OFF |
| E,8,1 MODE | OFF |
| E,7,1 MODE | OFF |
| RS-485 MODE | OFF |
| SECURITY MODE | OFF |
| MULTIDROP MODE | OFF |
| ENABLE MODEM | OFF |
| ERROR CHECKING | ON |
| XON/XOFF HANDSHAKE | OFF |
| HARDWARE HANDSHAKE | OFF |
| HARDWARE FIFO | ON |
| COMMAND PROMPT | OFF |

6. Next, configure your communications software, such as APIcom. Use the COM port determined in Step 4 and the baud rate set in Step 5. The figures below show how these parameters would be configured in the Instrument Properties window in APIcom when configuring a new instrument. See the APIcom manual (PN 07463) for more details.

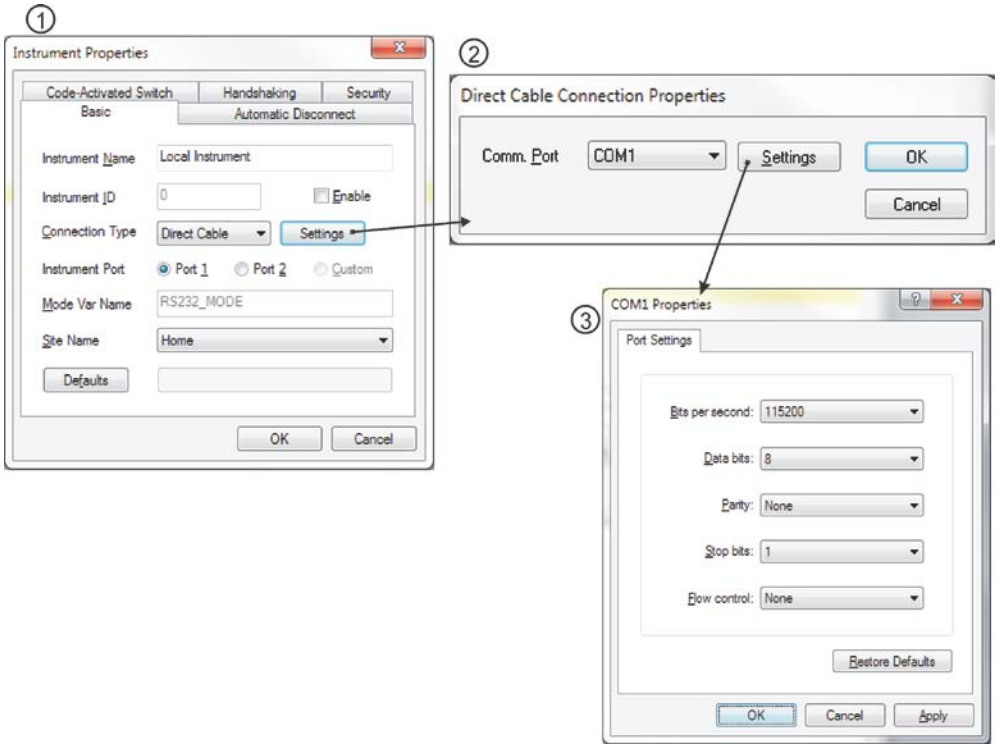


**Note**

- **USB configuration requires that the baud rates of the instrument and the PC match; check the PC baud rate and change if needed.**
- **Using the USB port disallows use of the rear panel COM2 port except for multidrop communication.**

# 6.7. COMMUNICATIONS PROTOCOLS

Two communications protocols available with the analyzer are MODBUS and Hessen. MODBUS setup instructions are provided here (Section 6.7.1) and registers are provided in Appendix A. Hessen setup and operation instructions are provided in Section 6.7.2.

## 6.7.1. MODBUS

The following set of instructions assumes that the user is familiar with MODBUS communications, and provides minimal information to get started. For additional instruction, please refer to the Teledyne API MODBUS manual, PN 06276. Also refer to www.modbus.org for MODBUS communication protocols.

### Minimum Requirements

- Instrument firmware with MODBUS capabilities installed.
- MODBUS-compatible software (TAPI uses MODBUS Poll for testing; see www.modbustools.com)
- Personal computer
- Communications cable (Ethernet or USB or RS232)
- Possibly a null modem adapter or cable

| **MODBUS Setup:** | |
|---|---|
| Set Com Mode parameters<br>Comm | Ethernet: Using the front panel menu, go to SETUP – MORE – COMM – INET; scroll through the INET submenu until you reach TCP PORT 2 (the standard setting is 502), then continue to TCP PORT 2 MODBUS TCP/IP; press EDIT and toggle the menu button to change the setting to ON, then press ENTR. (Change Machine ID if needed: see "Slave ID").<br>USB/RS232: Using the front panel menu, go to SETUP – MORE – COMM – COM2 – EDIT; scroll through the COM2 EDIT submenu until the display shows COM2 MODBUS RTU: OFF (press OFF to change the setting to ON. Scroll NEXT to COM2 MODBUS ASCII and ensure it is set to OFF. Press ENTR to keep the new settings. (If RTU is not available with your communications equipment, set the COM2 MODBUS ASCII setting to ON and ensure that COM2 MODBUS RTU is set to OFF. Press ENTR to keep the new settings). |
| Slave ID | A MODBUS slave ID must be set for each instrument. Valid slave ID's are in the range of 1 to 247. If your analyzer is connected to a serial network (i.e., RS-485), a unique Slave ID must be assigned to each instrument. To set the slave ID for the instrument, go to SETUP – MORE – COMM – ID. The default MACHINE ID is the same as the model number. Toggle the menu buttons to change the ID. |
| Reboot analyzer | For the settings to take effect, power down the analyzer, wait 5 seconds, and power up the analyzer. |
| Make appropriate cable connections | Connect your analyzer either:<br>• via its Ethernet or USB port to a PC (this may require a USB-to-RS232 adapter for your PC; if so, also install the software driver from the CD supplied with the adapter, and reboot the computer if required), or<br>• via its COM2 port to a null modem (this may require a null modem adapter or cable). |
| Specify MODBUS software settings<br>(examples used here are for MODBUS Poll software) | 1. Click Setup / [Read / Write Definition] /.<br>a. In the Read/Write Definition window (see example that follows) select a **Function** (what you wish to read from the analyzer).<br>b. Input **Quantity** (based on your firmware's register map).<br>c. In the View section of the Read/Write Definition window select a **Display** (typically Float Inverse).<br>d. Click **OK**.<br>2. Next, click Connection/Connect.<br>a. In the Connection Setup window (see example that follows), select the options based on your computer.<br>b. Press **OK**. |
| Read the Modbus Poll Register | Use the Register Map to find the test parameter names for the values displayed (see example that follows). If desired, assign an alias for each. |

Example Read/Write Definition window:

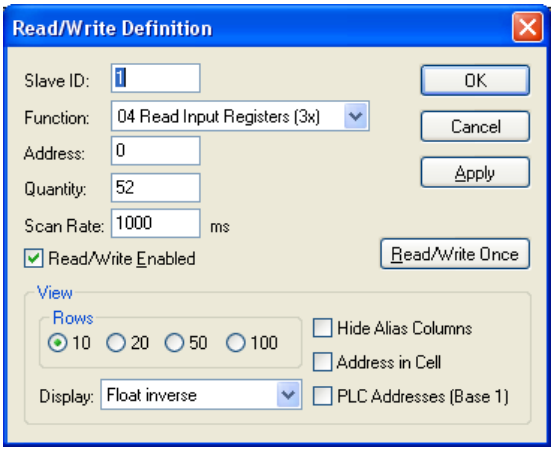


Example Connection Setup window:

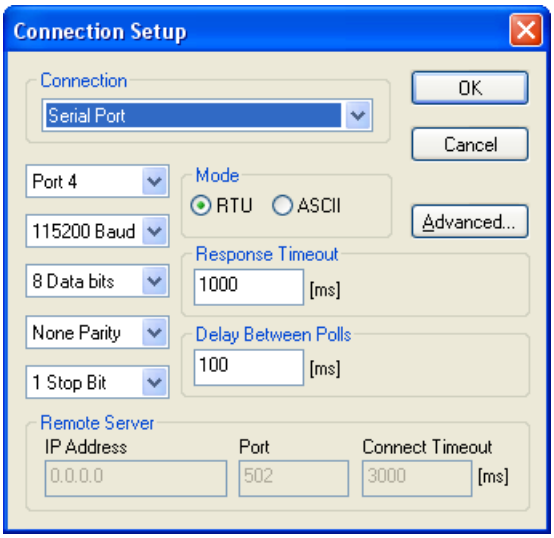


Example MODBUS Poll window:

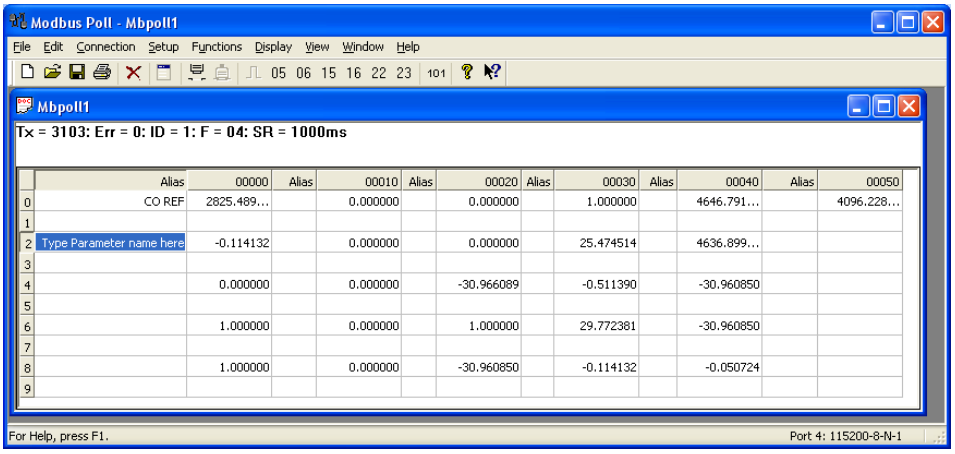


## 6.7.2. **HESSEN**

The Hessen protocol is a multidrop protocol, in which several remote instruments are connected via a common communications channel to a host computer. The remote

instruments are regarded as slaves of the host computer. The remote instruments are unaware that they are connected to a multidrop bus and never initiate Hessen protocol messages. They only respond to commands from the host computer and only when they receive a command containing their own unique ID number.

The Hessen protocol is designed to accomplish two things: to obtain the status of remote instruments, including the concentrations of all the gases measured; and to place remote instruments into zero or span calibration or measure mode. API's implementation supports both of these principal features.

The Hessen protocol is not well defined, therefore while API's application is completely compatible with the protocol itself, it may be different from implementations by other companies.

**Note** **The following sections describe the basics for setting up your instrument to operate over a Hessen Protocol network.**

**For more detailed information as well as a list of host computer commands and examples of command and response message syntax, download the Manual Addendum for Hessen Protocol from the Teledyne API web site: http://www.teledyne-api.com/manuals/.**

### 6.7.2.1. HESSEN COMM PORT CONFIGURATION

Hessen protocol requires the communication parameters of the T300/T300M Analyzer's COMM ports to be set differently than the standard configuration as shown in Table 6-4.

**Table 6-4: RS-232 Communication Parameters for Hessen Protocol**

| PARAMETER | STANDARD | HESSEN |
|---|---|---|
| Baud Rate | 300 – 19200 | 1200 |
| Data Bits | 8 | 7 |
| Stop Bits | 1 | 2 |
| Parity | None | Even |
| Duplex | Full | Half |

To change the baud rate of the T300/T300M's COMM ports, see Section 6.2.2.

To change the rest of the COMM port parameters listed in Table 6-4, see Section 6.2 and Table 6-1.

**IMPORTANT** **IMPACT ON READINGS OR DATA**

**Ensure that the communication parameters of the host computer are also properly set.**

**Note** **The instrument software has a 200 ms latency before it responds to commands issued by the host computer. This latency should present no**

**problems, but you should be aware of it and not issue commands to the instrument too quickly.**

### 6.7.2.2. **ACTIVATING HESSEN PROTOCOL**

Once the COMM port has been properly configured, the next step in configuring the T300/T300M to operate over a Hessen protocol network is to activate the Hessen mode for COMM ports and configure the communication parameters for the port(s) appropriately.

To activate the Hessen Protocol, press:

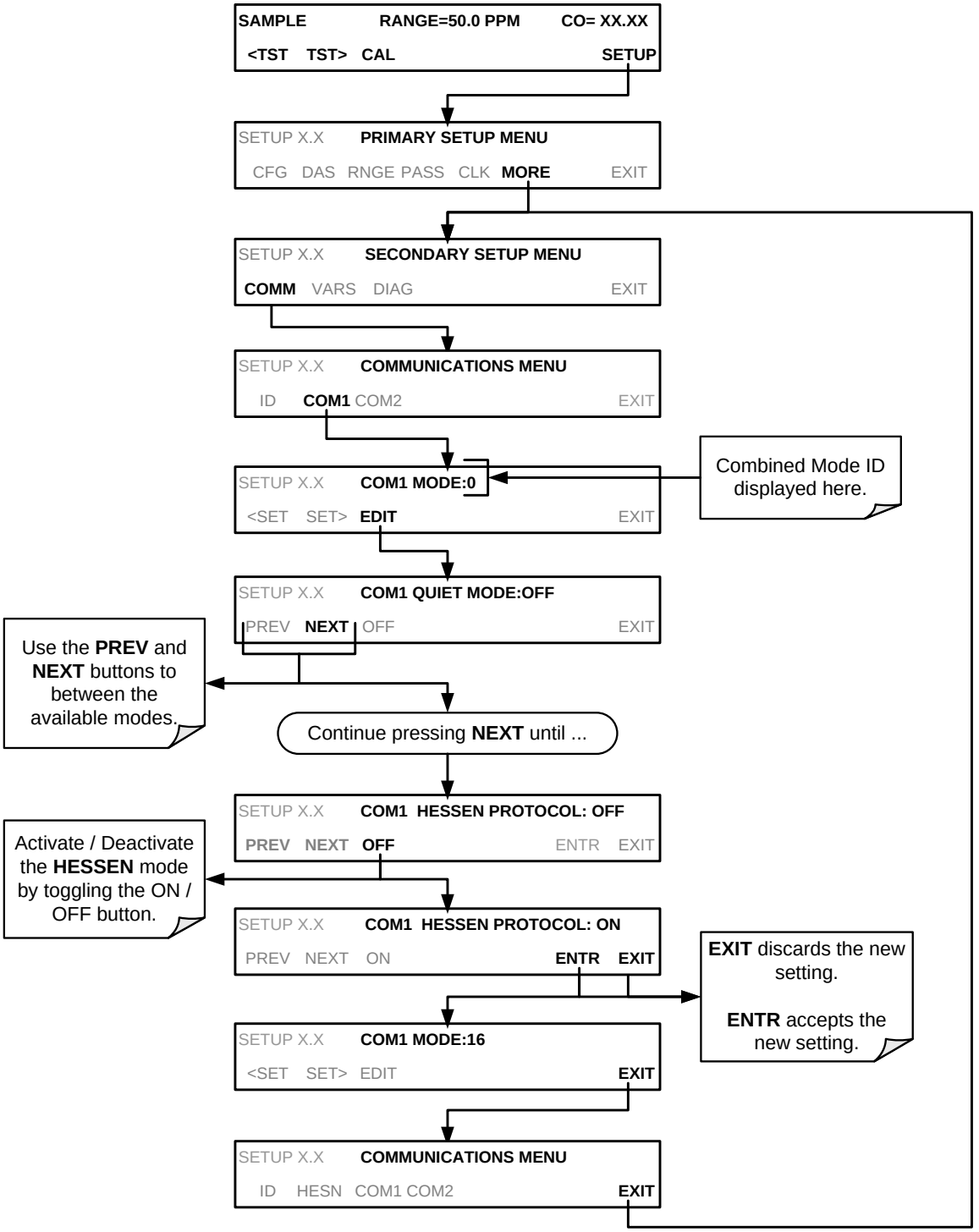

### 6.7.2.3. **SELECTING A HESSEN PROTOCOL TYPE**

Currently there are two versions of Hessen Protocol in use. The original implementation, referred to as **TYPE 1**, and a more recently released version, **TYPE 2** that has more flexibility when operating with instruments that can measure more than one type of gas.

For more specific information about the difference between **TYPE 1** and **TYPE 2** download the *Manual Addendum for Hessen Protocol* from the Teledyne API web site: http://www.teledyne-api.com/manuals/.

To select a Hessen Protocol Type press:

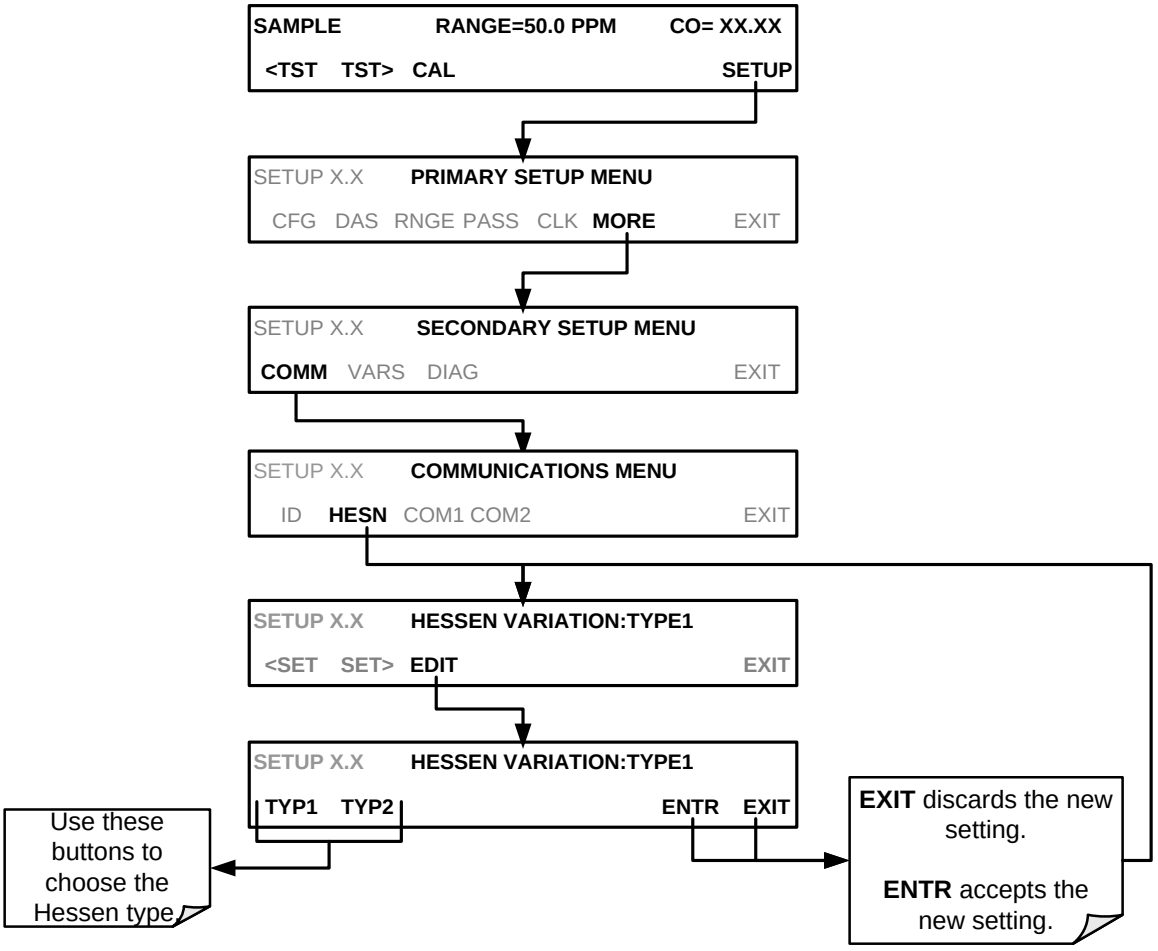


**Note** **While Hessen Protocol Mode can be activated independently for RS-232 and COM2, the TYPE selection affects both Ports.**

### 6.7.2.4. **SETTING THE HESSEN PROTOCOL RESPONSE MODE**

The Teledyne API's implementation of Hessen Protocol allows the user to choose one of several different modes of response for the analyzer.

**Table 6-5: Teledyne API's Hessen Protocol Response Modes**

| MODE ID | MODE DESCRIPTION |
|---|---|
| **CMD** | This is the Default Setting. Reponses from the instrument are encoded as the traditional command format. Style and format of responses depend on exact coding of the initiating command. |
| **BCC** | Responses from the instrument are always delimited with <STX> (at the beginning of the response, <ETX> (at the end of the response followed by a 2 digit Block Check Code (checksum), regardless of the command encoding. |
| **TEXT** | Responses from the instrument are always delimited with <CR> at the beginning and the end of the string, regardless of the command encoding. |

To select a Hessen response mode, press:

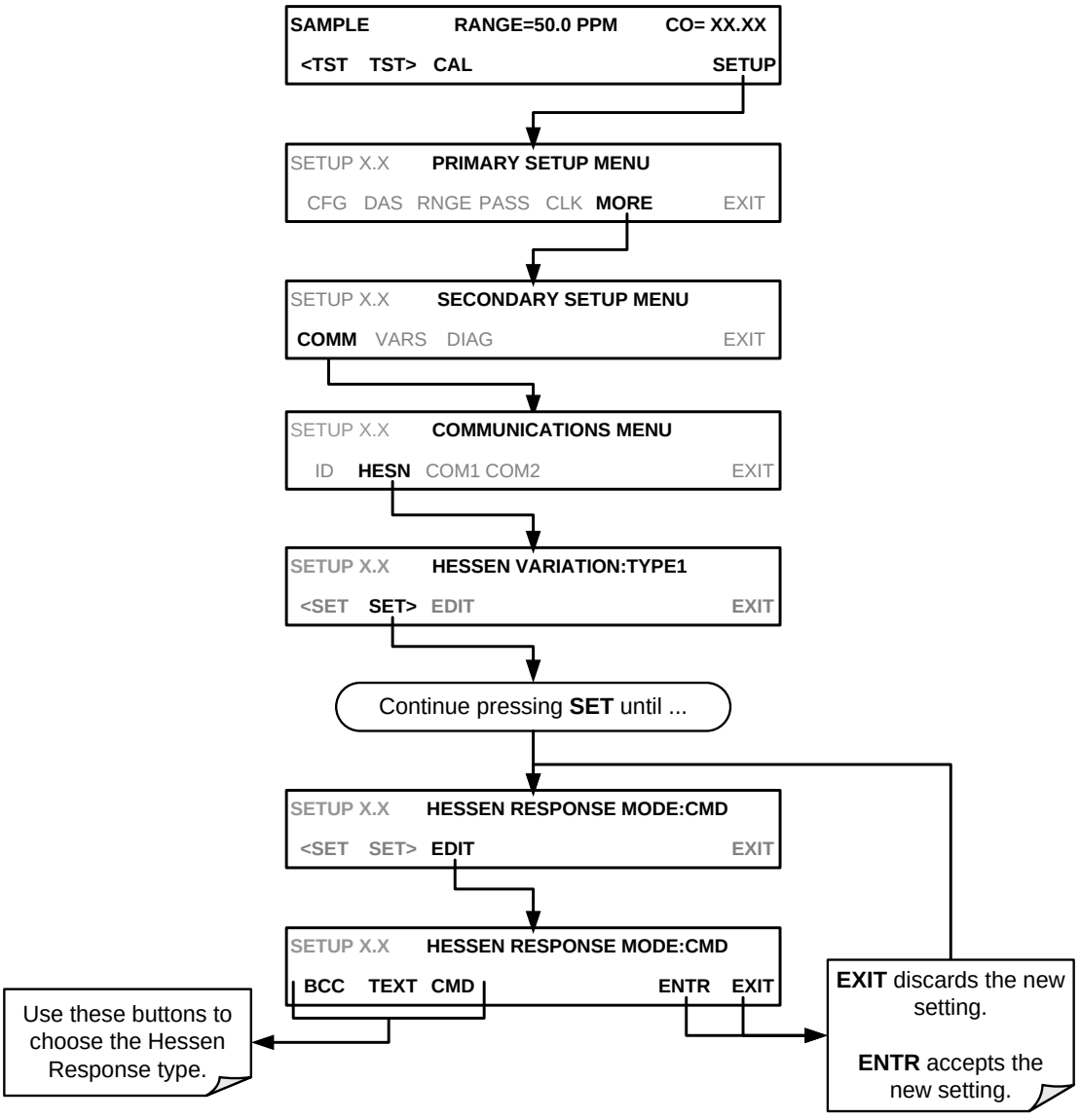

# 6.7.3. HESSEN PROTOCOL GAS LIST ENTRIES

## 6.7.3.1. HESSEN PROTOCOL GAS ID

The T300/T300M Analyzer keeps a list of available gas types. Each entry in this list takes the following format:

**[GAS TYPE],[RANGE],[GAS ID],[REPORTED]**

WHERE:

**GAS TYPE** = The type of gas to be reported (e.g. CO, $CO_2$, $O_2$, etc.).

**RANGE** = The concentration range for this entry in the gas list. This feature permits the user to select which concentration range will be used for this gas list entry. The T300/T300M Analyzer has two ranges: **RANGE1** or LOW & **RANGE2** or HIGH (See Section 5.4.1).

- 0 - The HESSEN protocol to use whatever range is currently active.
- 1 - The HESSEN protocol will always use **RANGE1** for this gas list entry.
- 2 - The HESSEN protocol will always use **RANGE2** for this gas list entry.
- 3 - Not applicable to the T300/T300M Analyzer.

**GAS ID** = An identification number assigned to a specific gas. In the case of the T300/T300M Analyzer in its base configuration, there is only one gas CO, and its default GAS ID is 310. This ID number should not be modified.

**REPORT** = States whether this list entry is to be reported or not reported when ever this gas type or instrument is polled by the HESSEN network. If the list entry is not to be reported this field will be blank.

While the T300/T300M Analyzer is a single gas instrument that measures CO, it can have additional, optional sensors for $CO_2$ or $O_2$ installed. The default gas list entries for these three gases are:

**CO, 0, 310, REPORTED**
**$CO_2$, 0, 311, REPORTED**
**$O_2$, 0, 312, REPORTED**

These default settings cause the instrument to report the concentration value of the currently active range. If you wish to have just concentration value stored for a specific range, this list entry should be edited or additional entries should be added to the list.

EXAMPLE: Changing the above CO gas list entry to read:

**CO, 2, 310, REPORTED**

would cause only the last CO reading while **RANGE2** (HIGH) range was active to be recorded.

### 6.7.3.2. **EDITING OR ADDING HESSEN GAS LIST ENTRIES**

To add or edit an entry to the Hessen Gas List, press:

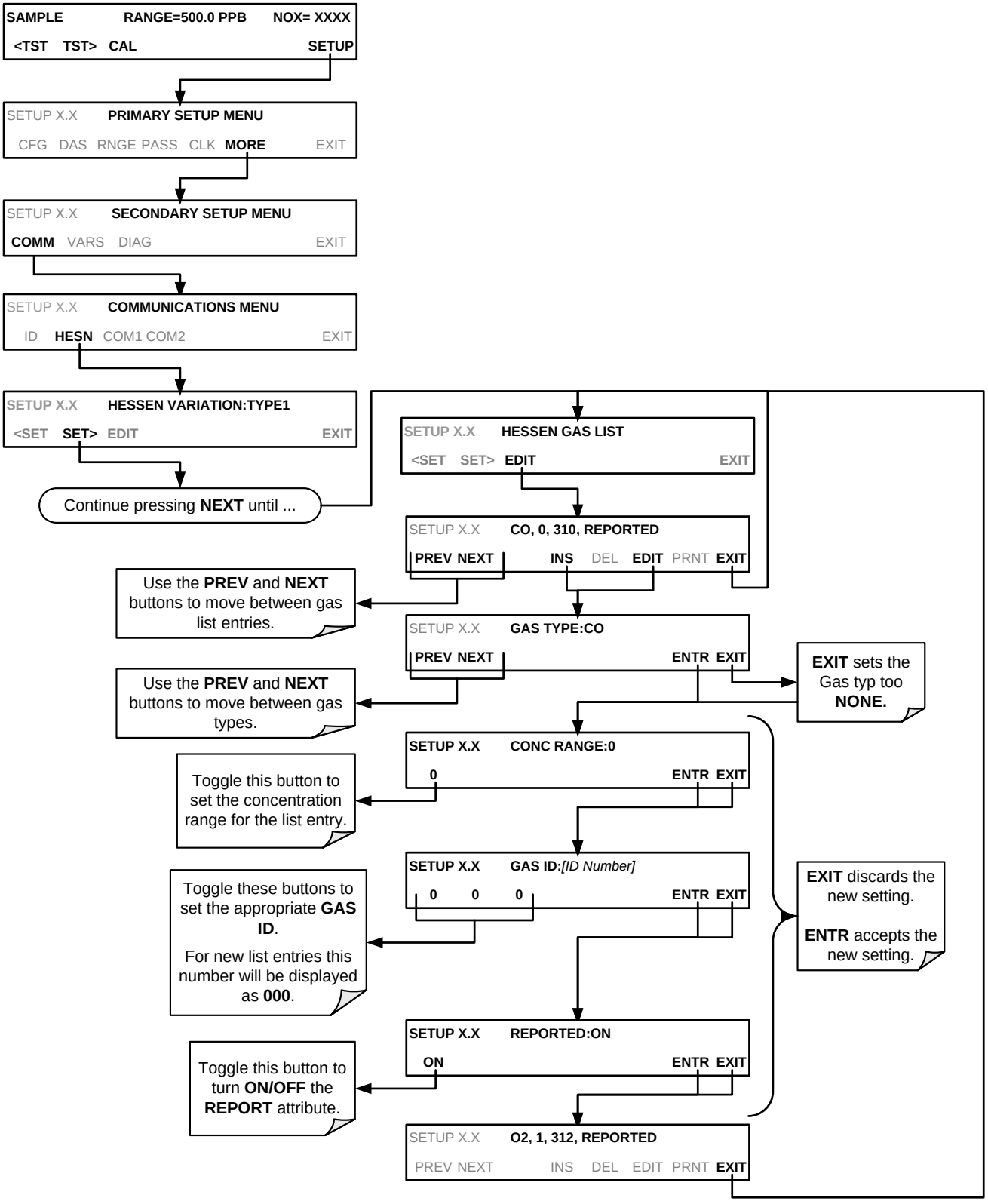

### 6.7.3.3. **DELETING HESSEN GAS LIST ENTRIES**

To delete an entry from the Hessen Gas list, press:

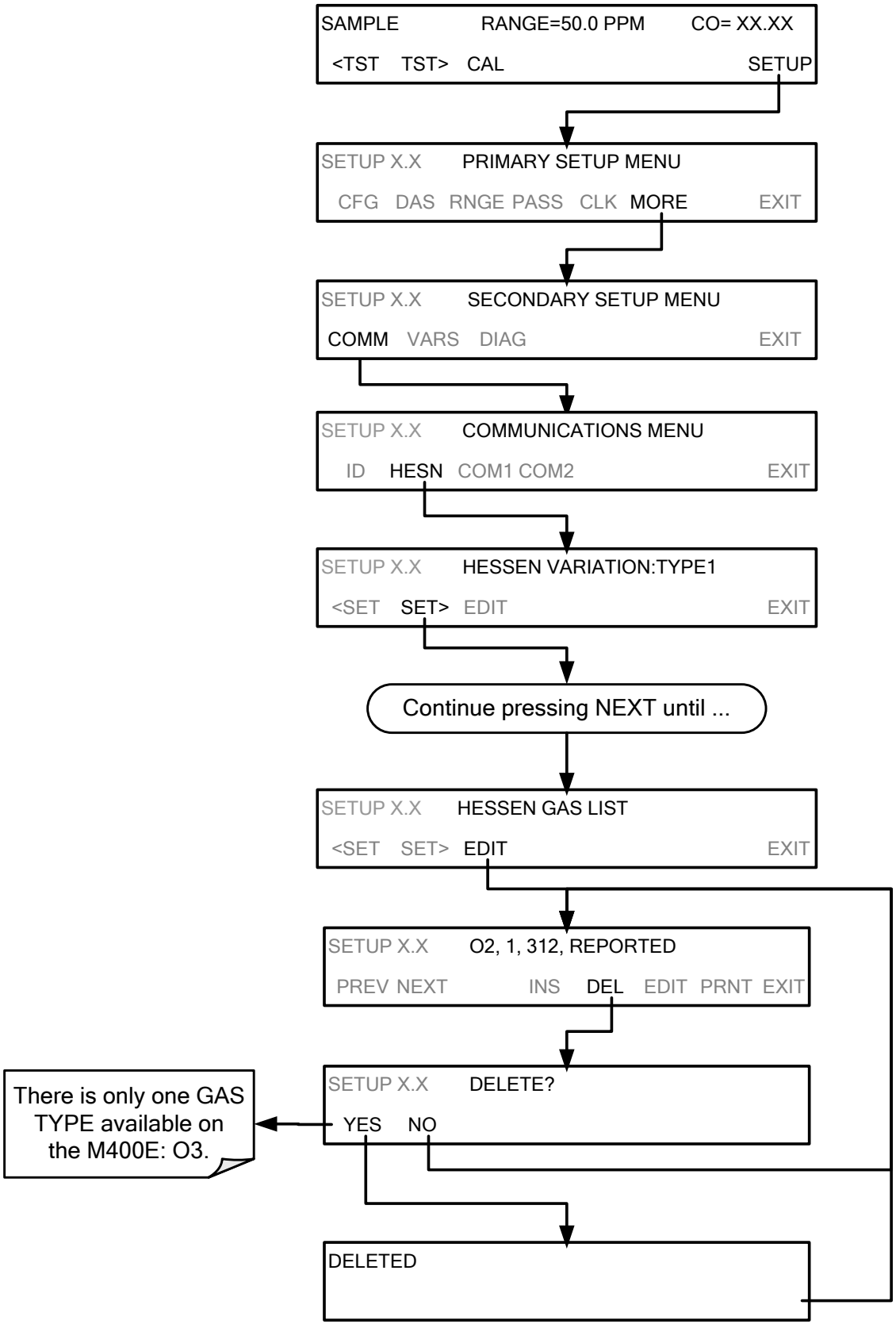

### 6.7.3.4. **SETTING HESSEN PROTOCOL STATUS FLAGS**

Teledyne API's implementation of Hessen protocols includes a set of status bits that the instrument includes in responses to inform the host computer of its condition. Each bit can be assigned to one operational and warning message flag. The default settings for these bit/flags are:

**Table 6-6: Default Hessen Status Flag Assignments**

| STATUS FLAG NAME | DEFAULT BIT ASSIGNMENT |
|---|---|
| **WARNING FLAGS** | |
| **SAMPLE FLOW WARNING** | 0001 |
| **BENCH TEMP WARNING** | 0002 |
| **SOURCE WARNING** | 0004 |
| **BOX TEMP WARNING** | 0008 |
| **WHEEL TEMP WARNING** | 0010 |
| **SAMPLE TEMP WARN** | 0020 |
| **SAMPLE PRESS WARN** | 0040 |
| **INVALID CONC** (The Instrument's Front Panel Display Will Show The Concentration As "Warnings") | 0080 |
| **OPERATIONAL FLAGS**[1] | |
| Instrument **OFF** | 0100 |
| In **MANUAL** Calibration Mode | 0200 |
| In **ZERO** Calibration Mode[4] | 0400 |
| In $O_2$ Calibration Mode (if $O_2$ sensor installed )[2,4] | 0400 |
| In $CO_2$ Calibration Mode (if $CO_2$ sensor installed )[2,4] | 0400 |
| In **SPAN** Calibration Mode | 0800 |
| **UNITS OF MEASURE FLAGS** | |
| **UGM** | 0000 |
| **MGM** | 2000 |
| **PPB** | 4000 |
| **PPM** | 6000 |
| **SPARE/UNUSED BITS** | 1000, 8000 |

| UNASSIGNED FLAGS (0000) | |
|---|---|
| **AZERO WARN**[2] | **DCPS WARNING** |
| **CANNOT DYN SPAN**[2] | **REAR BOARD NOT DET** |
| **CANNOT DYN ZERO**[3] | **SYNC WARNING**[1] |
| **CONC ALARM 1**[3] | **SYSTEM RESET**[1] |
| **CONC ALARM 2**[3] | |

[1] These status flags are standard for all instruments and should probably not be modified.

[2] Only applicable if the optional internal span gas generator is installed.

[3] Only applicable if the analyzer is equipped with an alarm options.

[3] It is possible to assign more than one flag to the same Hessen status bit. This allows the grouping of similar flags, such as all temperature warnings, under the same status bit.

Be careful not to assign conflicting flags to the same bit as each status bit will be triggered if any of the assigned flags is active.

To assign or reset the status flag bit assignments, press:

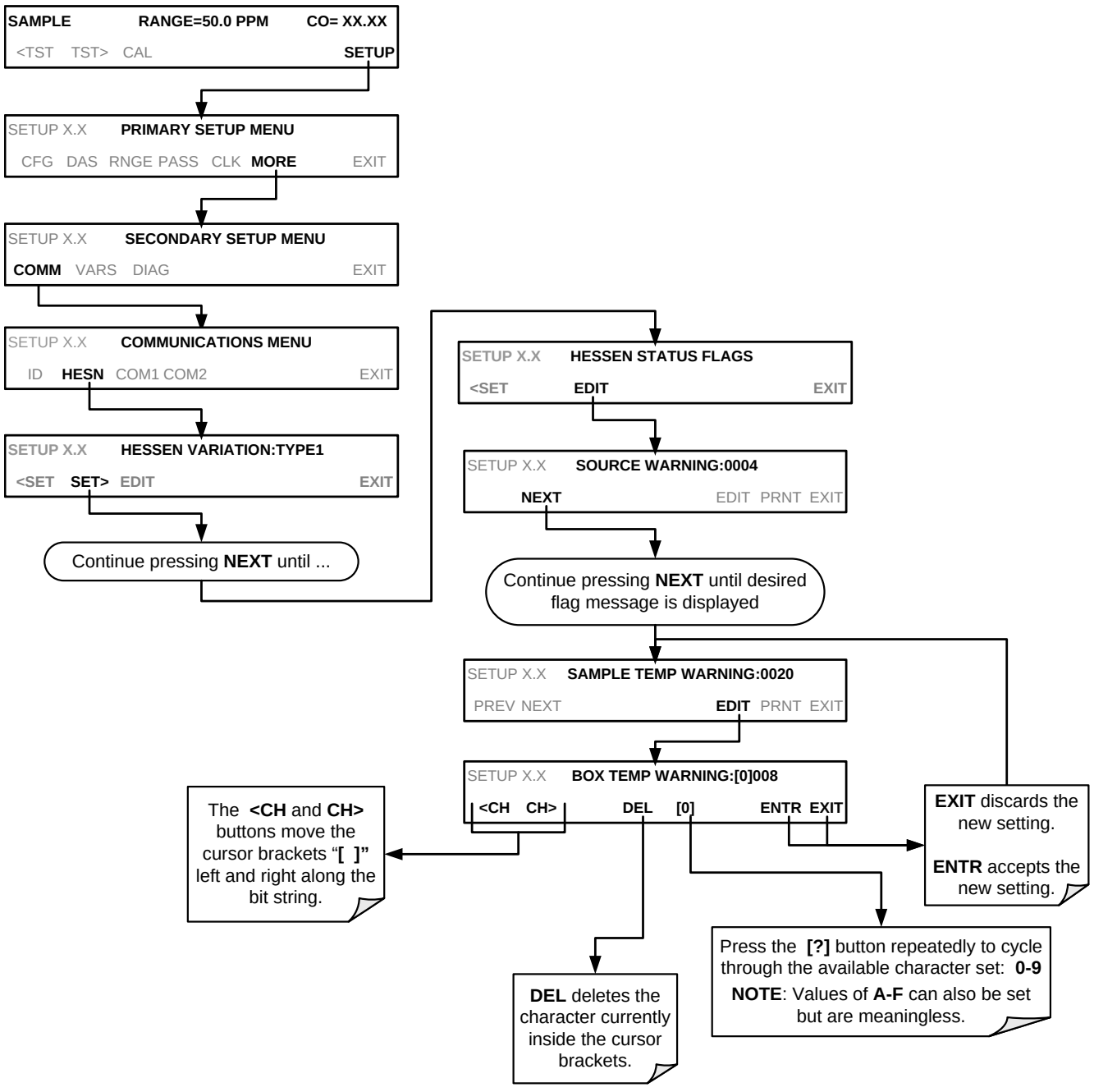


### 6.7.3.5. **INSTRUMENT ID**

Each instrument on a Hessen Protocol network must have a unique identifier (ID number). If more than one T300/T300M analyzer is on the Hessen network, refer to Section 5.7.1 for information and to customize the ID of each.

# 7. DATA ACQUISITION SYSTEM (DAS) AND APICOM

The T300/T300M Analyzer contains a flexible and powerful, Internal Data Acquisition System (DAS) that enables the analyzer to store concentration and calibration data as well as a host of diagnostic parameters. The DAS of the T300/T300M can store up to about one million data points, which can, depending on individual configurations, cover days, weeks or months of valuable measurements. The data is stored in non-volatile memory and is retained even when the instrument is powered off. Data is stored in plain text format for easy retrieval and use in common data analysis programs (such as spreadsheet-type programs).

The DAS is designed to be flexible, users have full control over the type, length and reporting time of the data. The DAS permits users to access stored data through the instrument's front panel or its communication ports.

The principal use of the DAS is logging data for trend analysis and predictive diagnostics, which can assist in identifying possible problems before they affect the functionality of the analyzer. The secondary use is for data analysis, documentation and archival in electronic format.

To support the DAS functionality, Teledyne API offers APICOM, a program that provides a visual interface for remote or local setup, configuration and data retrieval of the DAS. The APICOM manual, which is included with the program, contains a more detailed description of the DAS structure and configuration, which is briefly described in this manual.

The T300/T300M is configured with a basic DAS configuration, which is enabled by default. New data channels are also enabled by default at their creation, but all channels may be turned off for later or occasional use.

The green SAMPLE LED on the instrument front panel, which indicates the analyzer status, also indicates certain aspects of the DAS status:

**Table 7-1: Front Panel LED Status Indicators for DAS**

| LED STATE | DAS STATUS |
|---|---|
| Off | System is in calibration mode. Data logging can be enabled or disabled for this mode. Calibration data are typically stored at the end of calibration periods, concentration data are typically not sampled, diagnostic data should be collected. |
| Blinking | Instrument is in hold-off mode, a short period after the system exits calibrations. DAS channels can be enabled or disabled for this period. Concentration data are typically disabled whereas diagnostic should be collected. |
| On | Sampling normally. |

**Note**

**DAS operation is suspended whenever its configuration is edited using the analyzer's front panel and therefore data may be lost. To prevent such data loss, it is recommended to use the APICOM graphical user interface for DAS changes (Sections .**

**Please be aware that all stored data will be erased if the analyzer's disk-on-module or CPU board is replaced or if the configuration data stored there is reset.**

**Note**

**The DAS can be disabled only by disabling or deleting its individual data channels.**

# 7.1. DAS STRUCTURE

The DAS is designed around the feature of a "record". A record is a single data point. The type of data recorded in a record is defined by two properties:

**PARAMETER** type that defines the kind of data to be stored (e.g. the average of gas concentrations measured with three digits of precision). See Section 7.1.6.

A **TRIGGER** event that defines when the record is made (e.g. timer; every time a calibration is performed, etc.). See Section 7.1.5.

The specific **PARAMETERS** and **TRIGGER** events that describe an individual record are defined in a construct called a **DATA CHANNEL** (see Section 7.1.1). Each data channel is related one or more parameters with a specific trigger event and various other operational characteristics related to the records being made (e.g. the channels name, number or records to be made, time period between records, whether or not the record is exported via the analyzer's RS-232 port, etc.).

## 7.1.1. DAS DATA CHANNELS

The key to the flexibility of the DAS is its ability to store a large number of combinations of triggering events and data parameters in the form of data channels. Users may create up to 50 data channels and each channel can contain one or more parameters. For each channel, the following are selected:

- One triggering event is selected.
- Up to 50 data parameters, which can be the shared between channels.
- Several other properties that define the structure of the channel and allow the user to make operational decisions regarding the channel.

**Table 7-2: DAS Data Channel Properties**

| PROPERTY | DESCRIPTION | DEFAULT SETTING | SETTING RANGE |
|---|---|---|---|
| NAME | The name of the data channel. | **"NONE"** | Up to 6 letters or digits [1] |
| TRIGGERING EVENT | The event that triggers the data channel to measure and store the datum. | **ATIMER** | Any available event (see Appendix A-5). |
| NUMBER AND LIST OF PARAMETERS | A User-configurable list of data types to be recorded in any given channel. | **1** (COMEAS) | Any available parameter (see Appendix A-5). |
| REPORT PERIOD | The amount of time between each channel data point. | **000:01:00** *(1 hour)* | 000:00:01 to 366:23:59 (Days:Hours:Minutes) |
| NUMBER OF RECORDS | The number of reports that will be stored in the data file. Once the limit is exceeded, the oldest data is over-written. | **100** | 1 to 1 million, limited by available storage space. |
| RS-232 REPORT | Enables the analyzer to automatically report channel values to the RS-232 ports. | **OFF** | OFF or ON |
| CHANNEL ENABLED | Enables or disables the channel. Allows a channel to be temporarily turned off without deleting it. | **ON** | OFF or ON |
| CAL HOLD OFF | Disables sampling of data parameters while instrument is in calibration mode [2]. | **OFF** | OFF or ON |

[1] More with APICOM, but only the first six are displayed on the front panel.

[2] When enabled records are not recorded until the DAS HOLD OFF period is passed after calibration mode. DAS HOLD OFF SET in the **VARS** menu (see Section 7.1.11).

## 7.1.2. DEFAULT DAS CHANNELS

A set of default Data Channels has been included in the analyzer's software for logging CO concentration and certain predictive diagnostic data. These default channels include but are not limited to:

- **CONC:** Samples CO concentration at one minute intervals and stores an average every hour with a time and date stamp. Readings during calibration and calibration hold off are not included in the data.
  - By default, the last 800 hourly averages are stored.
- **PNUMTC:** Collects sample flow and sample pressure data at five-minute intervals and stores an average once a day with a time and date stamp. This data is useful for monitoring the condition of the pump and critical flow orifice (sample flow) and the sample filter (clogging indicated by a drop in sample pressure) over time to predict when maintenance will be required.
  - The last 360 daily averages (about 1 year) are stored.

- **CALDAT:** Logs new slope and offset of CO measurements every time a zero or span calibration is performed and the result changes the value of the slope (triggering event: **SLPCHG**). The CO stability data to evaluate if the calibration value was stable are also stored.
  - This data channel will store data from the last 200 calibrations and can be used to document analyzer calibration and is useful in the detection of the in slope and offset (instrument response) when performing predictive diagnostics as part of a regular maintenance schedule.
  - The CALDAT channel collects data based on events (e.g. a calibration operation) rather than a timed interval and therefore does not represent any specific length of time. As with all data channels, a date and time stamp is recorded for every logged data point.

These default Data Channels can be used as they are, or they can be customized from the front panel to fit a specific application. They can also be deleted to make room for custom user-programmed Data Channels.

Appendix A-5 lists the firmware-specific DAS configuration in plain-text format. This text file can either be loaded into APICOM and then modified and uploaded to the instrument or can be copied and pasted into a terminal program to be sent to the analyzer.

**IMPORTANT**

**IMPACT ON READINGS OR DATA**

**Sending a DAS configuration to the analyzer through its COM ports will replace the existing configuration and will delete all stored data. Back up any existing data and the DAS configuration before uploading new settings.**

Triggering Events and Data Parameters/Functions for these default channels are:

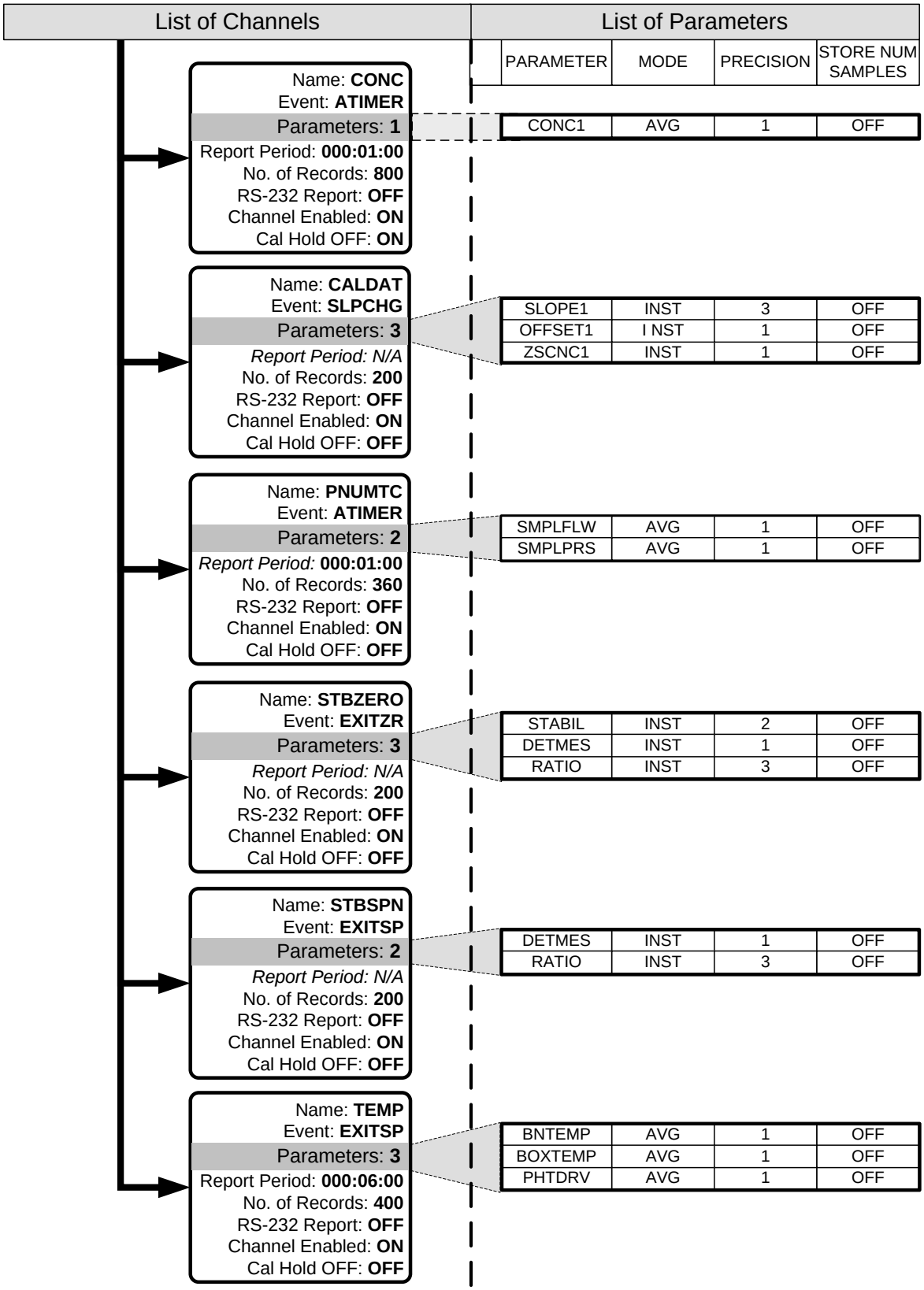


**Figure 7-1: Default DAS Channel Setup**

## 7.1.3. VIEWING DAS CHANNELS AND INDIVIDUAL RECORDS

DAS data and settings can be viewed on the front panel through the following buttonstroke sequence.

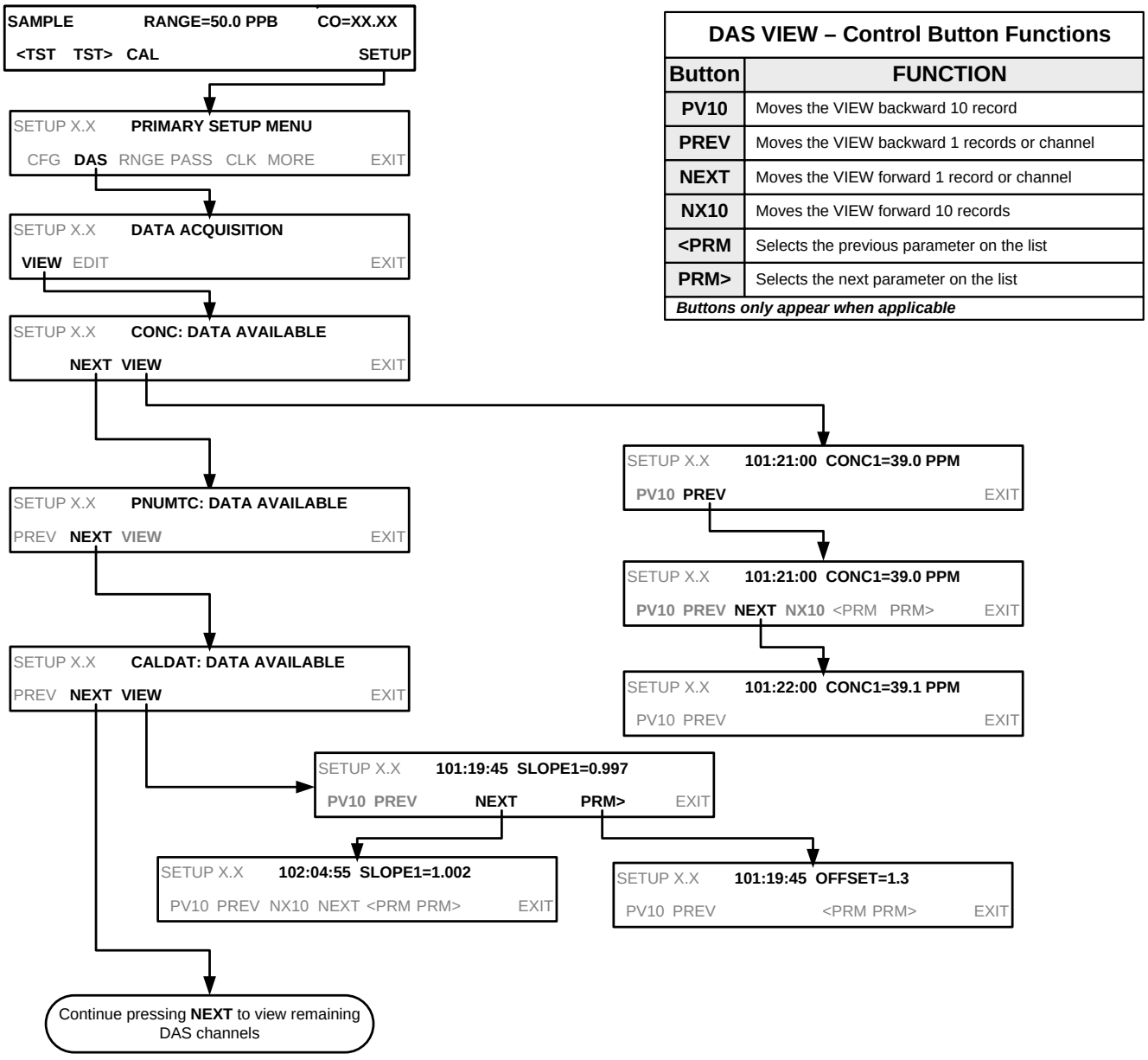


**DAS VIEW – Control Button Functions**

| Button | FUNCTION |
|---|---|
| **PV10** | Moves the VIEW backward 10 record |
| **PREV** | Moves the VIEW backward 1 records or channel |
| **NEXT** | Moves the VIEW forward 1 record or channel |
| **NX10** | Moves the VIEW forward 10 records |
| **<PRM** | Selects the previous parameter on the list |
| **PRM>** | Selects the next parameter on the list |

***Buttons only appear when applicable***

## 7.1.4. EDITING DAS CHANNELS

DAS configuration is most conveniently done through the APICOM remote control program. The following list of button strokes shows how to edit the DAS using the front panel.

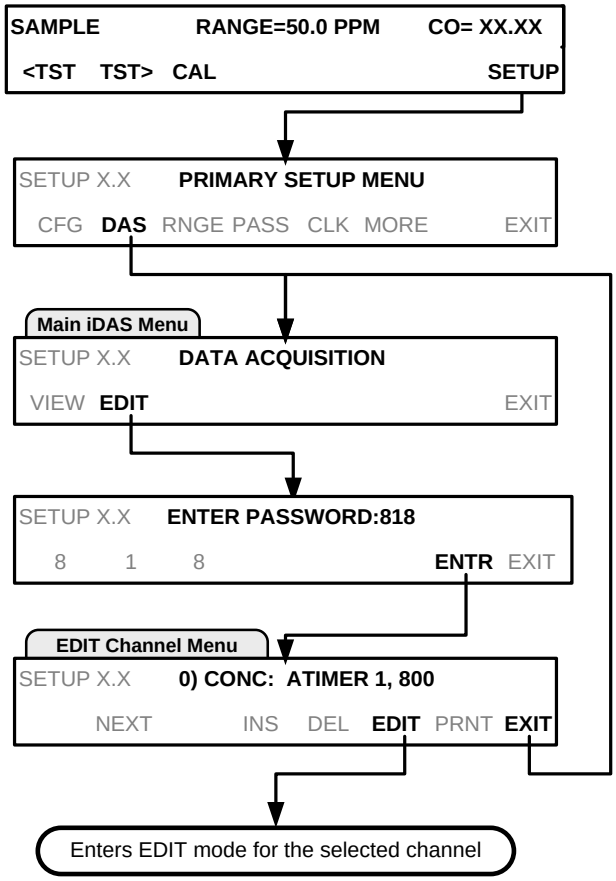


**DAS EDIT – Control Button Functions**

| Button | FUNCTION |
|---|---|
| **PREV** | Selects the previous data channel in the list |
| **NEXT** | Selects the next data channel in the list |
| **INS** | Inserts a new data channel into the list BEFORE the selected channel |
| **DEL** | Deletes the currently selected data channel |
| **EDIT** | Enters EDIT mode |
| **PRINT** | Exports the configuration of all data channels to the RS-232 interface |

***Buttons only appear when applicable.***

When editing the data channels, the top line of the display indicates some of the configuration parameters.

For example, the display line:

**0) CONC: ATIMER, 1, 800**

Translates to the following configuration:

**Channel No.:** 0
**NAME:** CONC
**TRIGGER EVENT:** ATIMER
**PARAMETERS:** One parameter is included in this channel
**EVENT:** This channel is set up to store 800 records.

### 7.1.4.1. **EDITING DAS DATA CHANNEL NAMES**

To edit the name of a DAS data channel, follow the instruction shown in Section 7.1.4.1, then press:

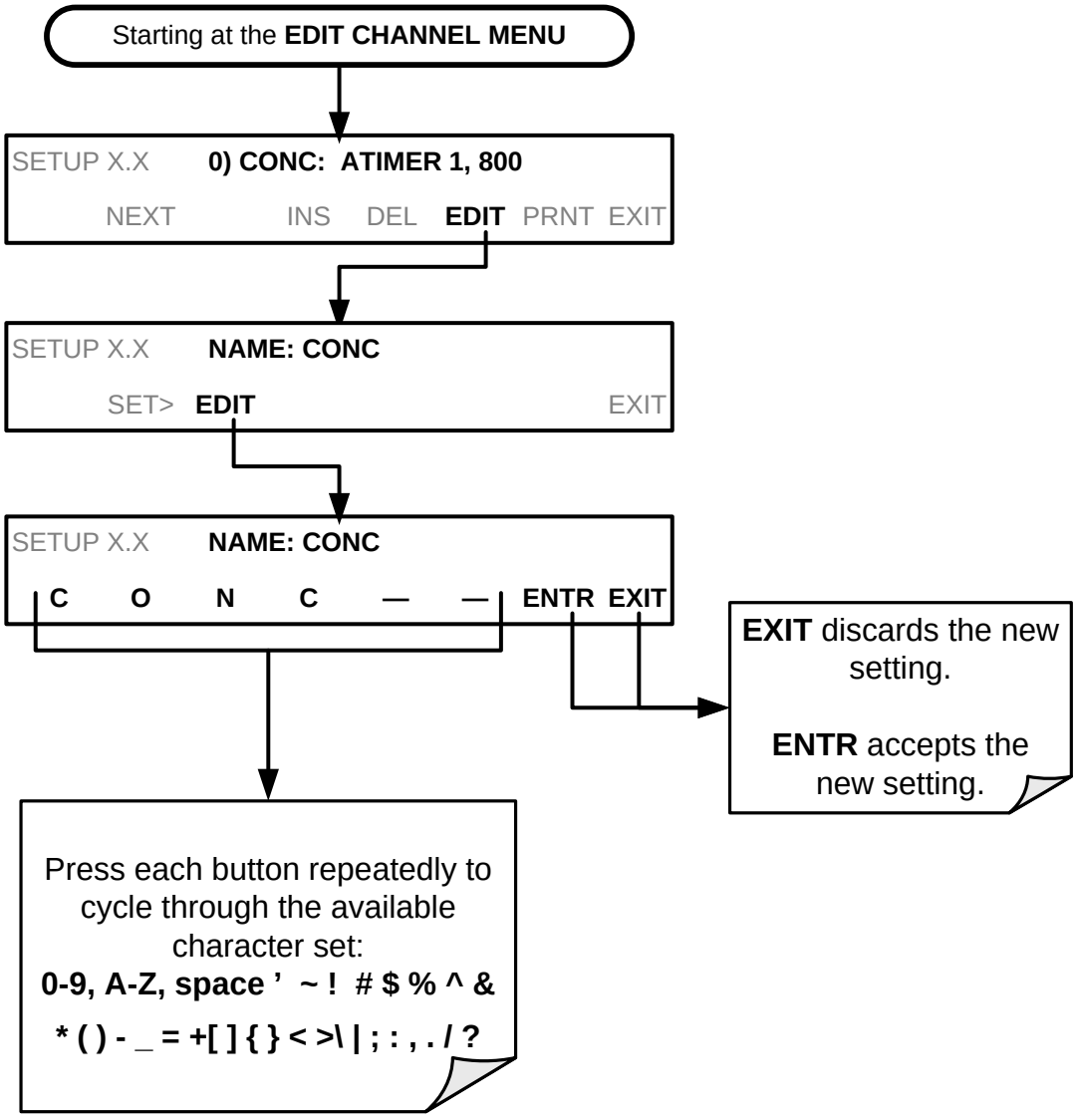

## 7.1.5. EDITING DAS TRIGGERING EVENTS

Triggering events define when and how the DAS records a measurement of any given data channel. Triggering events are firmware-specific and are listed in Appendix A-5. The most commonly used triggering events are:

- **ATIMER**: Sampling at regular intervals specified by an automatic timer. Most trending information is usually stored at such regular intervals, which can be instantaneous or averaged.
- **EXITZR**, **EXITSP**, and **SLPCHG** (exit zero, exit span, slope change): Sampling at the end of (irregularly occurring) calibrations or when the response slope changes. These triggering events create instantaneous data points, e.g., for the new slope and offset (concentration response) values at the end of a calibration. Zero and slope values are valuable to monitor response drift and to document when the instrument was calibrated.
- **WARNINGS:** Some data may be useful when stored if one of several warning messages appears such as **WTEMPW** (GFC Wheel temperature warning). This is helpful for troubleshooting by monitoring when a particular warning occurrs.

To edit the list of data parameters associated with a specific data channel, follow the instruction shown in Section 7.1.4 then press:

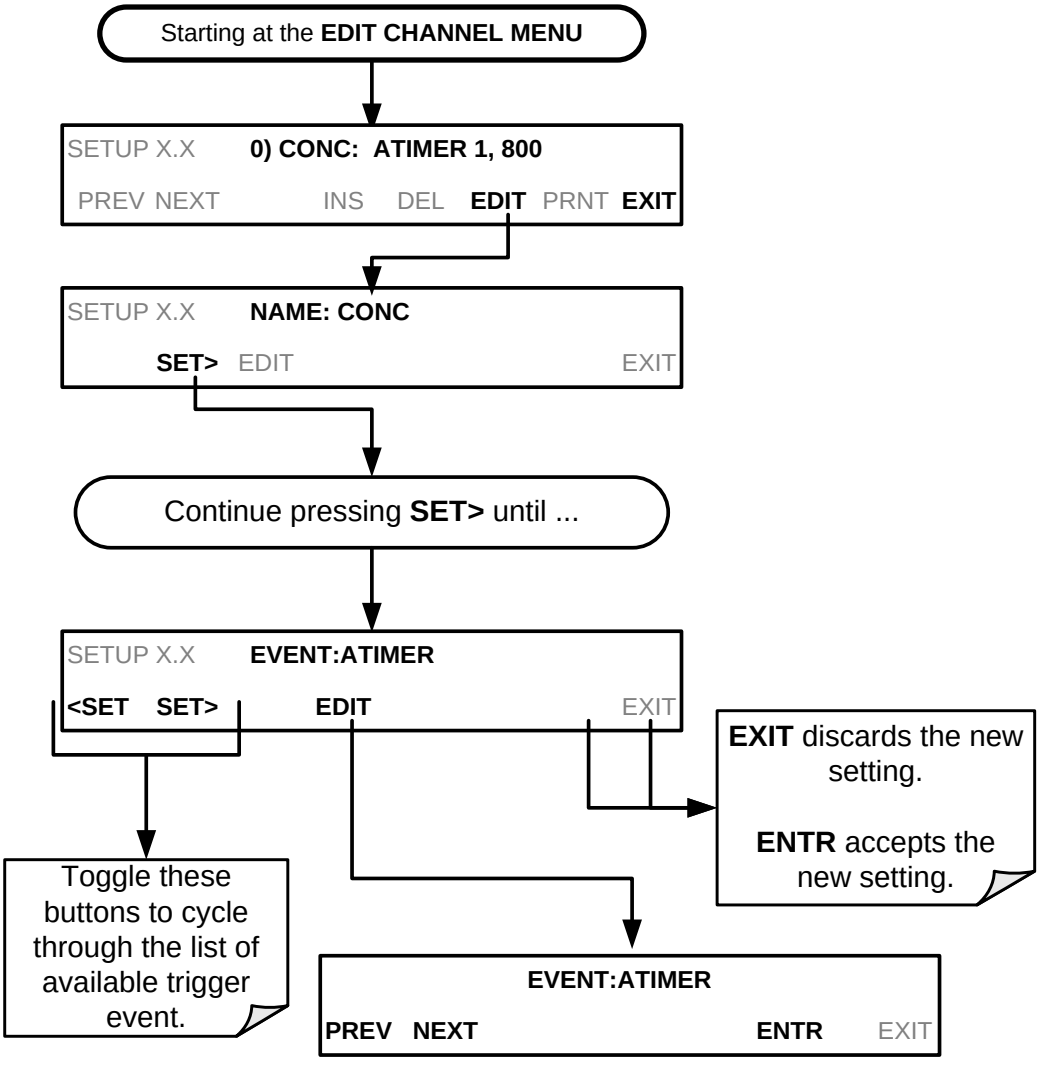

## 7.1.6. EDITING DAS PARAMETERS

Data parameters are types of data that may be measured and stored by the DAS. For each analyzer model, the list of available data parameters is different, fully defined and not customizable. Appendix A-5 lists firmware specific data parameters for the T300/T300M. DAS parameters include things like CO concentration measurements, temperatures of the various heaters placed around the analyzer, pressures and flows of the pneumatic subsystem and other diagnostic measurements as well as calibration data such as stability, slope and offset.

Most data parameters have associated measurement units, such as mV, ppb, $cm^3$/min, etc., although some parameters have no units (e.g. **SLOPE**). With the exception of concentration readings, none of these units of measure can be changed. To change the units of measure for concentration readings, see Section 5.4.4.

**Note**

**DAS does not keep track of the unit (e.g., PPM, PPB, etc.) of each concentration value and DAS data files may contain concentrations in more than one type of unit if the unit was changed during data acquisition.**

Each data parameter has user-configurable functions that define how the data are recorded (refer to Table 7-3).

**Table 7-3: DAS Data Parameter Functions**

| FUNCTION | EFFECT |
|---|---|
| **PARAMETER** | Instrument-specific parameter name. |
| **SAMPLE MODE** | **INST:** Records instantaneous reading.<br>**AVG:** Records average reading during reporting interval.<br>**SDEV:** Records the standard deviation of the data points recorded during the reporting interval.<br>**MIN:** Records minimum (instantaneous) reading during reporting interval.<br>**MAX:** Records maximum (instantaneous) reading during reporting interval. |
| **PRECISION** | **0 to 4:** Sets the number of digits to the right decimal point for each record.<br>Example: Setting **4**; **"399.9865 PPB"**<br>Setting **0**; **"400 PPB"** |
| **STORE NUM SAMPLES** | **OFF:** Stores only the average (default).<br>**ON:** Stores the average and the number of samples in used to compute the value of the parameter. This property is only useful when the AVG sample mode is used. Note that the number of samples is the same for all parameters in one channel and needs to be specified only for one of the parameters in that channel. |

Users can specify up to 50 parameters per data channel (the T300/T300M provides about 40 parameters). However, the number of parameters and channels is ultimately limited by available memory.

Data channels can be edited individually from the front panel without affecting other data channels. However, when editing a data channel, such as during adding, deleting or editing parameters, all data for that particular channel will be lost, because the DAS can store only data of one format (number of parameter columns, etc.) for any given channel. In addition, a DAS configuration can only be uploaded remotely as an entire set of channels. Hence, remote update of the DAS will always delete all current channels and stored data.

To modify, add or delete a parameter, follow the instruction shown in Section 7.1.4 then press:

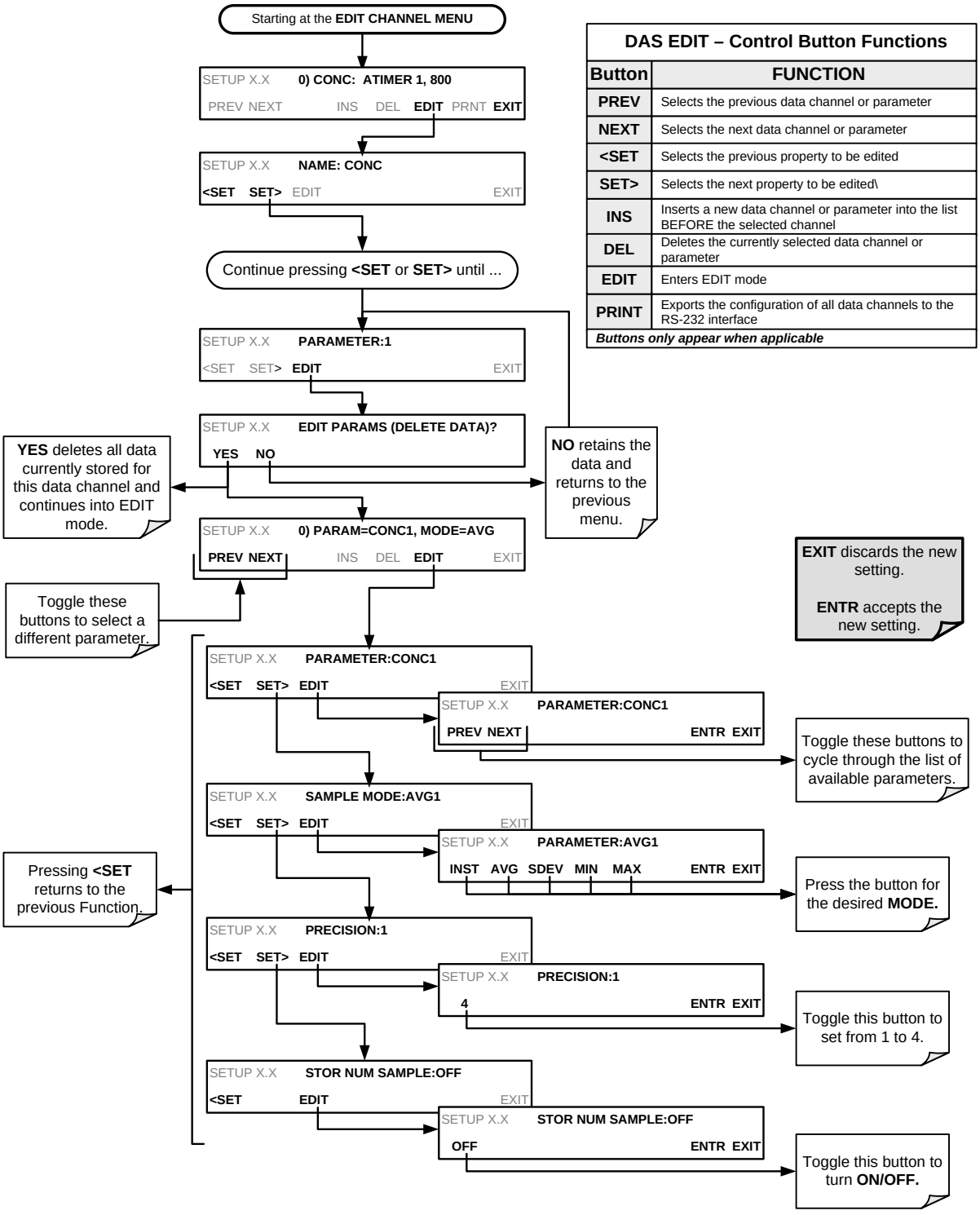


**DAS EDIT – Control Button Functions**

| Button | FUNCTION |
|---|---|
| PREV | Selects the previous data channel or parameter |
| NEXT | Selects the next data channel or parameter |
| <SET | Selects the previous property to be edited |
| SET> | Selects the next property to be edited\ |
| INS | Inserts a new data channel or parameter into the list BEFORE the selected channel |
| DEL | Deletes the currently selected data channel or parameter |
| EDIT | Enters EDIT mode |
| PRINT | Exports the configuration of all data channels to the RS-232 interface |
| *Buttons only appear when applicable* | |

**Note**

**When the STORE NUM SAMPLES feature is turned on, the instrument will store how many measurements were used to compute the AVG, SDEV, MIN or MAX value but not the actual measurements themselves.**

## 7.1.7. SAMPLE PERIOD AND REPORT PERIOD

The DAS defines two principal time periods by which sample readings are taken and permanently recorded: Sample and Report periods.

- **SAMPLE PERIOD:** Determines how often DAS temporarily records a sample reading of the parameter in volatile memory. **SAMPLE PERIOD** is only used when the DAS parameter's sample mode is set for **AVG**, **SDEV**, **MIN** or **MAX.**

  The **SAMPLE PERIOD** is set to one minute by default and generally cannot be accessed from the standard DAS front panel menu, but is available via the instrument's communication ports by using APICOM or the analyzer's standard serial data protocol.

- **REPORT PERIOD:** Sets how often the sample readings stored in volatile memory are processed, (e.g. average, minimum or maximum are calculated) and the results stored permanently in the instrument's Disk-on-Module as well as transmitted via the analyzer's communication ports. The Report Period may be set from the front panel. If the INST sample mode is selected the instrument stores and reports an instantaneous reading of the selected parameter at the end of the chosen report period.

To define the **REPORT PERIOD**, follow the instruction shown in Section 7.1.4 then press:

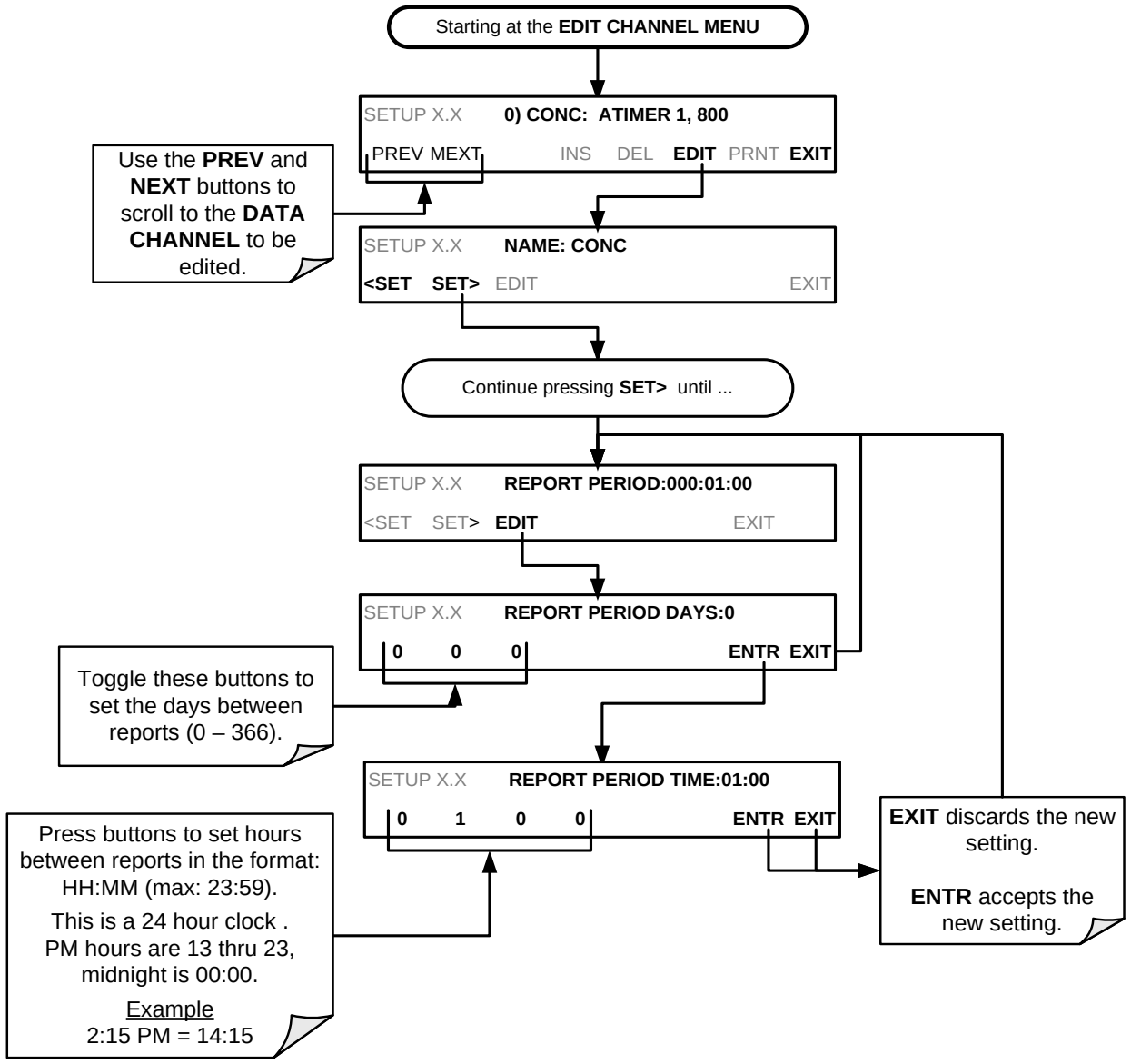


The **SAMPLE PERIOD** and **REPORT PERIOD** intervals are synchronized to the beginning and end of the appropriate interval of the instruments internal clock.

- If **SAMPLE PERIOD** were set for one minute the first reading would occur at the beginning of the next full minute according to the instrument's internal clock.
- If the **REPORT PERIOD** were set for of one hour, the first report activity would occur at the beginning of the next full hour according to the instrument's internal clock.

EXAMPLE:

Given the above settings, if the DAS were activated at 7:57:35 the first sample would occur at 7:58 and the first report would be calculated at 8:00 consisting of data points for 7:58, 7:59 and 8:00.

During the next hour (from 8:01 to 9:00), the instrument will take a sample reading every minute and include 60 sample readings.

**Note**

**In AVG, SDEV, MIN or MAX sample modes (see Section 6.1.5.3), the settings for the Sample Period and the Report Period determine the number of data points used each time the parameter is calculated, stored and reported to the COMM ports.**

**The actual sample readings are not stored past the end of the chosen report period.**

**When the STORE NUM SAMPLES feature is turned on, the instrument will store the number of measurements used to compute the AVG, SDEV, MIN or MAX Value, but not the actual measurements themselves.**

#### REPORT PERIODS IN PROGRESS WHEN INSTRUMENT IS POWERED OFF

If the instrument is powered off in the middle of a **REPORT PERIOD**, the samples accumulated so far during that period are lost. Once the instrument is turned back on, the DAS restarts taking samples and temporarily stores them in volatile memory as part of the **REPORT PERIOD** currently active at the time of restart. At the end of this **REPORT PERIOD PERIOD,** only the sample readings taken since the instrument was turned back on will be included in any **AVG**, **SDEV**, **MIN** or **MAX** calculation.

Also, the **STORE NUM SAMPLES** feature will report the number of sample readings taken since the instrument was restarted.

## 7.1.8. NUMBER OF RECORDS

The number of data records in the DAS is limited to about a cumulative one million data points in all channels (one megabyte of space on the Disk-on-Module). However, the actual number of records is also limited by the total number of parameters and channels and other settings in the DAS configuration. Every additional data channel, parameter, number of samples setting, etc., will reduce the maximum amount of data points. In general, however, the maximum data capacity is divided amongst all channels (max: 20) and parameters (max: 50 per channel).

The DAS will check the amount of available data space and prevent the user from specifying too many records at any given point. If, for example, the DAS memory space can accommodate 375 more data records, the **ENTR** button will disappear when trying to specify more than that number of records. This check for memory space may also cause the upload of a DAS configuration with APICOM or a terminal program to fail, if the combined number of records would be exceeded. In this case, it is suggested to either try to determine what the maximum number of records available is using the front panel interface or use trial-and-error in designing the DAS script or calculate the number of records using the DAS or APICOM manuals.

To set the **NUMBER OF RECORDS**, follow the instruction shown in Section 7.1.4 then press:

.

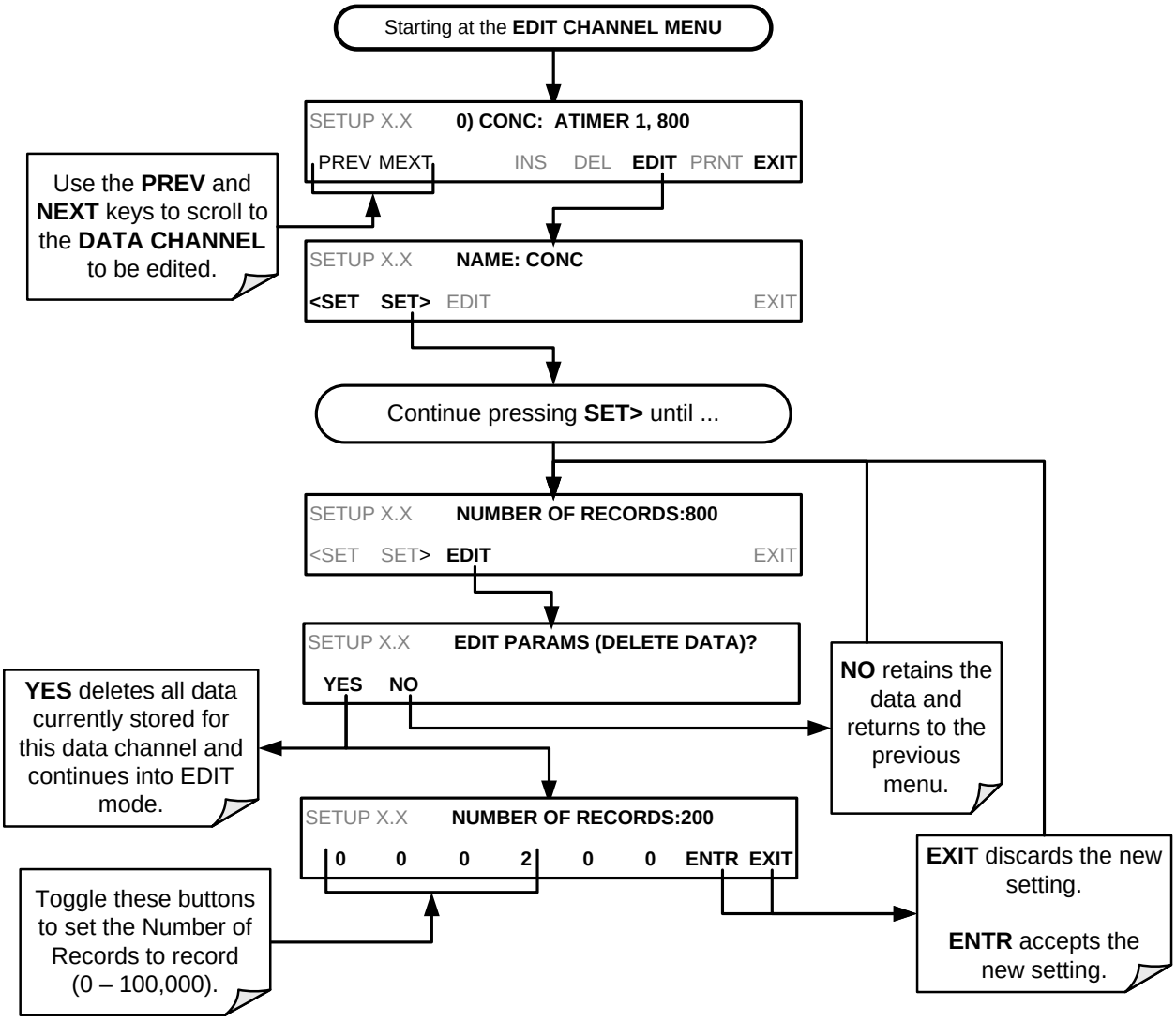
Starting at the **EDIT CHANNEL MENU**
SETUP X.X 0) CONC: ATIMER 1, 800
PREV MEXT INS DEL EDIT PRNT EXIT
Use the **PREV** and **NEXT** keys to scroll to the **DATA CHANNEL** to be edited.
SETUP X.X NAME: CONC
<SET SET> EDIT EXIT
Continue pressing **SET>** until ...
SETUP X.X NUMBER OF RECORDS:800
<SET SET> EDIT EXIT
SETUP X.X EDIT PARAMS (DELETE DATA)?
YES NO
**YES** deletes all data currently stored for this data channel and continues into EDIT mode.
**NO** retains the data and returns to the previous menu.
SETUP X.X NUMBER OF RECORDS:200
0 0 0 2 0 0 ENTR EXIT
Toggle these buttons to set the Number of Records to record (0 – 100,000).
**EXIT** discards the new setting.
**ENTR** accepts the new setting.

## 7.1.9. **RS-232 REPORT FUNCTION**

The DAS can automatically report data to the communications ports, where they can be captured with a terminal emulation program or simply viewed by the user using the APICOM software.

To enable automatic COMM port reporting, follow the instruction shown in Section 7.1.4 then press:

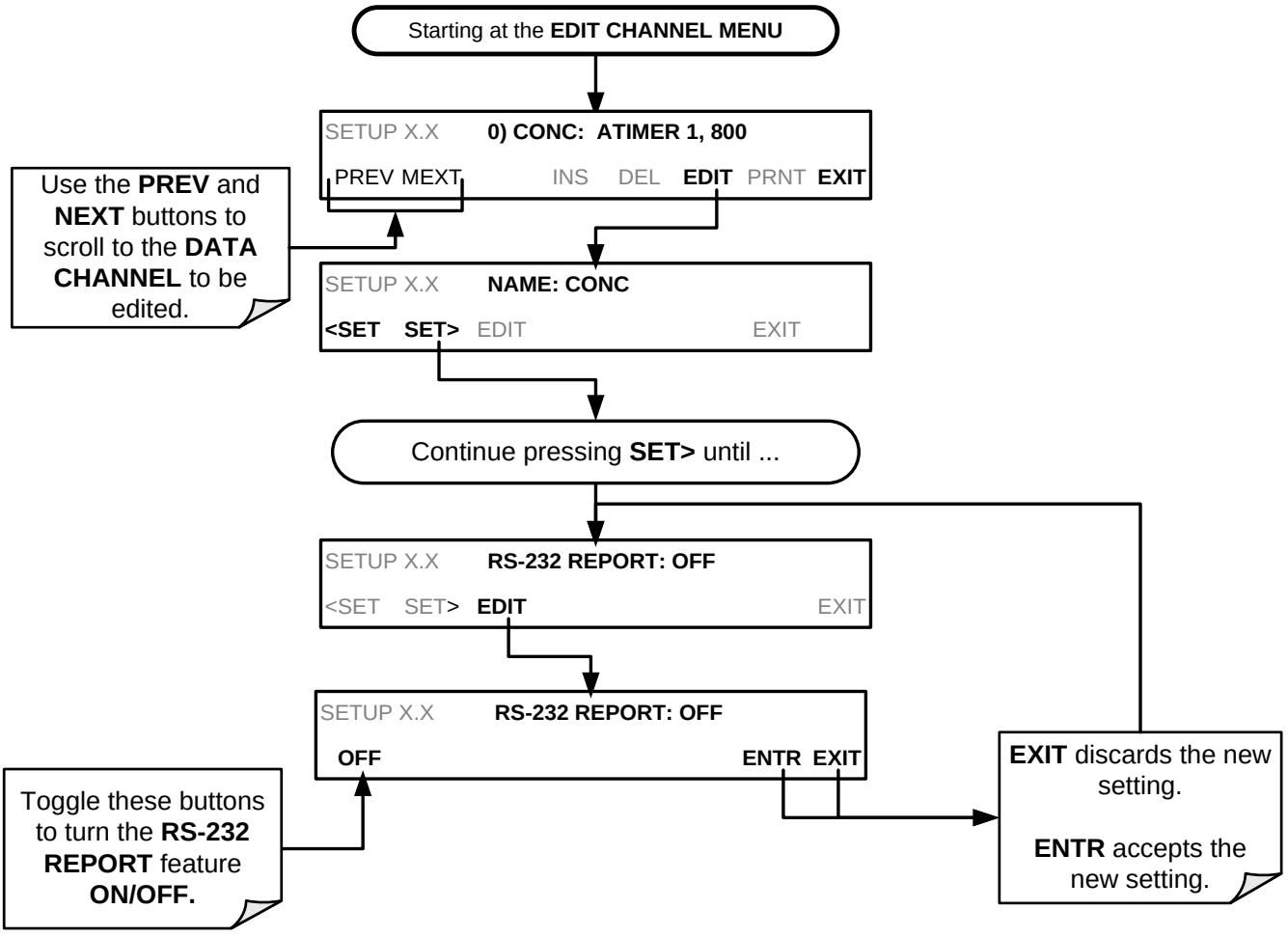


### 7.1.9.1. **THE COMPACT REPORT FEATURE**

When enabled, this option avoids unnecessary line breaks on all RS-232 reports. Instead of reporting each parameter in one channel on a separate line, up to five parameters are reported in one line.

The **COMPACT DATA REPORT** generally cannot be accessed from the standard DAS front panel menu, but is available via the instrument's communication ports by using APICOM or the analyzer's standard serial data protocol.

### 7.1.9.2. **THE STARTING DATE FEATURE**

This option allows the user to specify a starting date for any given channel in case the user wants to start data acquisition only after a certain time and date. If the **STARTING DATE** is in the past (the default condition), the DAS ignores this setting and begins recording data as defined by the **REPORT PERIOD** setting.

The **STARTING DATE** generally cannot be accessed from the standard DAS front panel menu, but is available via the instrument's communication ports by using APICOM or the analyzer's standard serial data protocol.

## 7.1.10. **DISABLING/ENABLING DATA CHANNELS**

Data channels can be temporarily disabled, which can reduce the read/write wear on the Disk-on-Module.

To disable a data channel, follow the instruction shown in Section 7.1.4 then press:

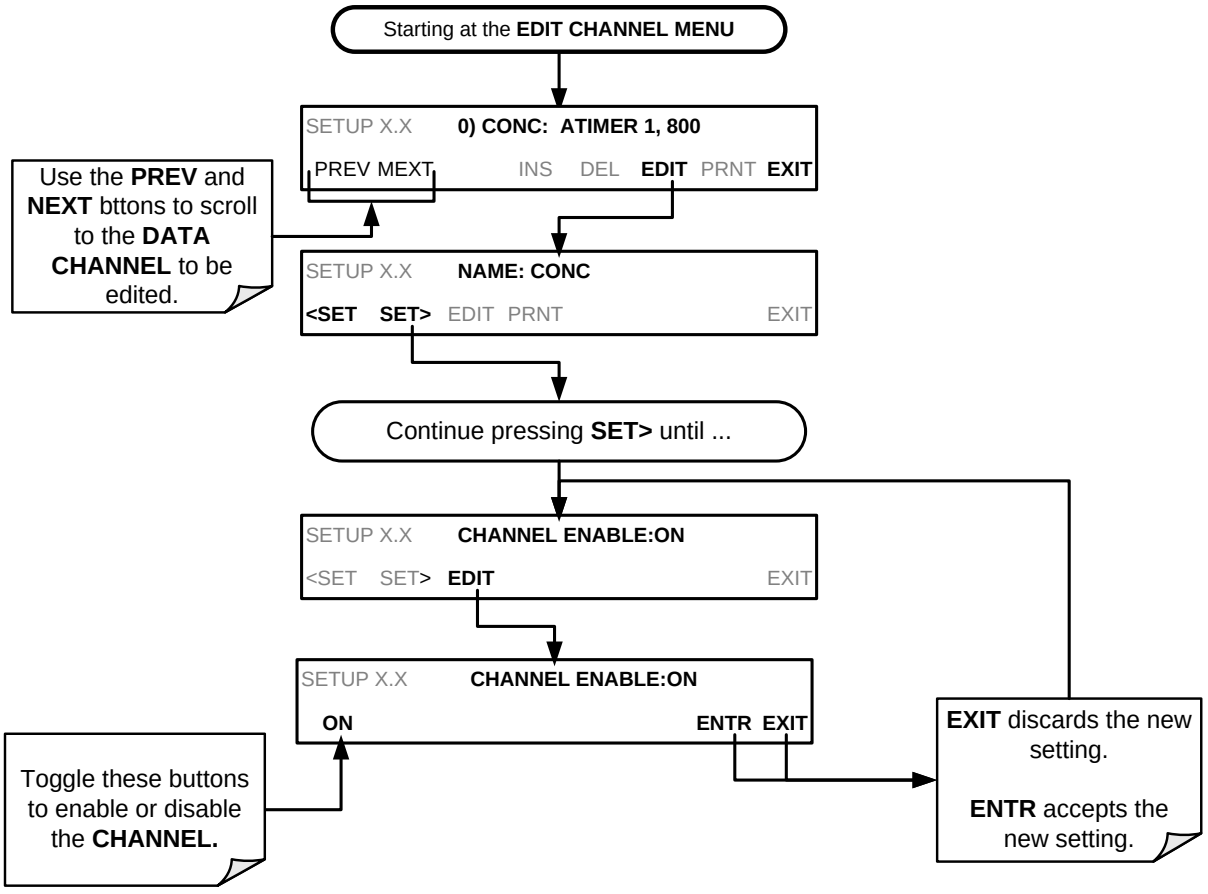

## 7.1.11. HOLDOFF FEATURE

The DAS **HOLDOFF** feature prevents data collection during calibration operations and at certain times when the quality of the analyzer's CO measurements may not be certain (e.g. while the instrument is warming up). In this case, the length of time that the **HOLDOFF** feature is active is determined by the value of the internal variable (**VARS**), DAS_HOLDOFF.

To set the length of the DAS_HOLDOFF period, go to the SETUP>MORE>VARS menu (Section 5.8) and EDIT the "0) DAS_HOLD_OFF…" parameter.

To enable or disable the **HOLDOFF** feature for an individual channel, follow the instruction shown in Section 7.1.4 then press:

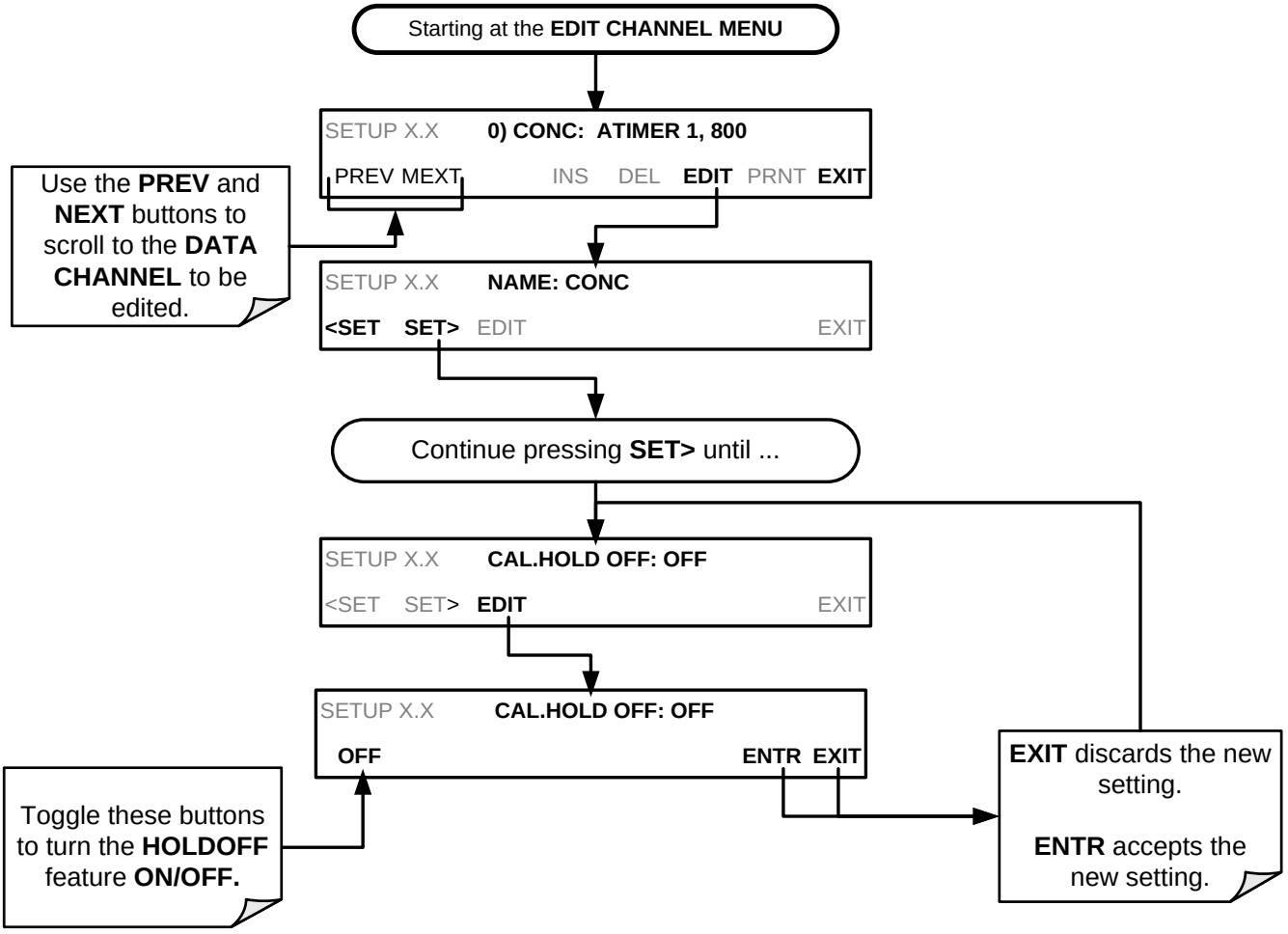

# 7.2. REMOTE DAS CONFIGURATION

The DAS can be configured and operated remotely via either the APICOM interface or a terminal emulation program. Once a DAS configuration is edited (which can be done offline and without interrupting DAS data collection), it is conveniently uploaded to the instrument and can be stored on a computer for later review, alteration or documentation and archival.

## 7.2.1. DAS CONFIGURATION VIA APICOM

Figure 7-2 shows examples of APICOM's main interface, which emulates the look and functionality of the instrument's actual front panel. Figure 7-3 shows an example of APICOM being used to remotely configure the DAS feature.

The APICOM user manual (Teledyne API's P/N 039450000) is included in the APICOM installation file, which can be downloaded at http://www.teledyne-api.com/software/apicom/.

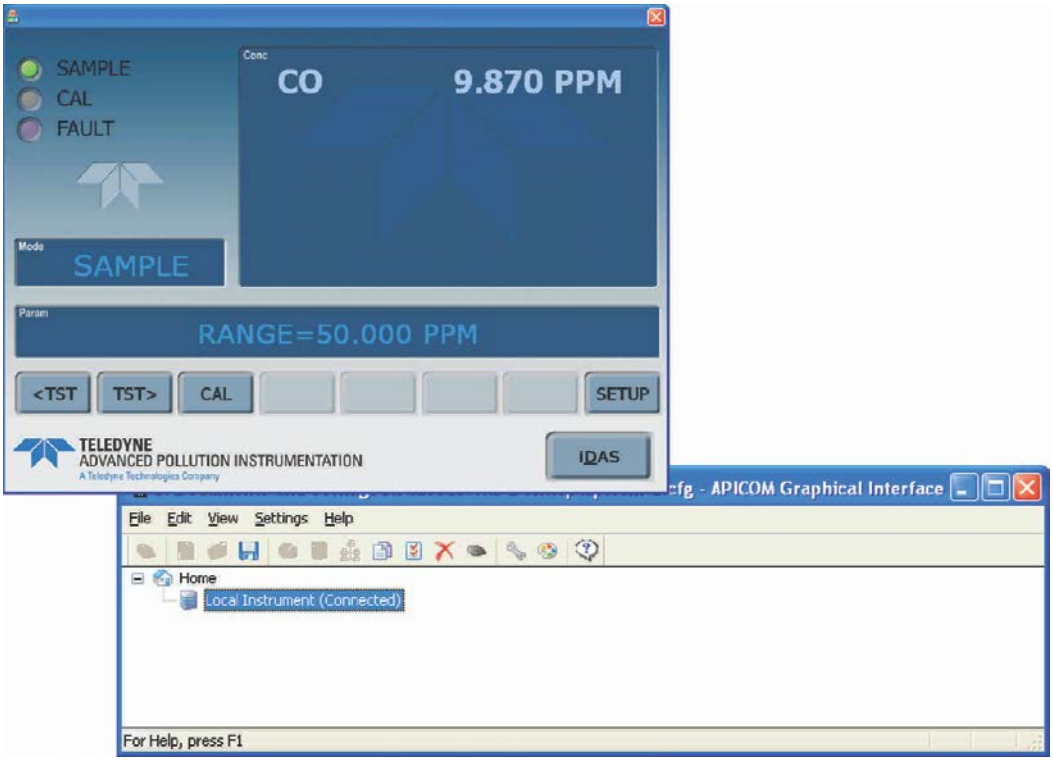


**Figure 7-2: APICOM Remote Control Program Interface**

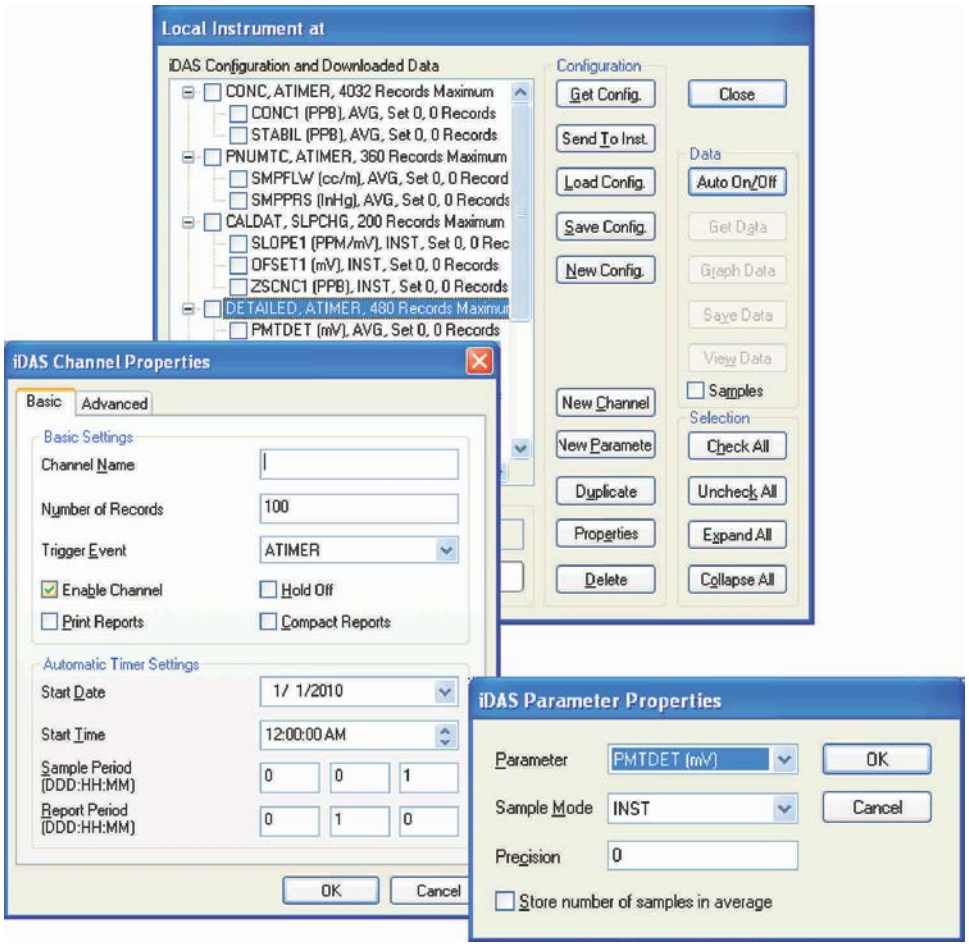


**Figure 7-3: APICOM User Interface for Configuring the DAS**

Once a DAS configuration is edited (which can be done offline and without interrupting DAS data collection), it is conveniently uploaded to the instrument and can be stored on a computer for later review, alteration or documentation and archival. Refer to the APICOM manual for details on these procedures. The APICOM user manual (Teledyne API's P/N 039450000) is included in the APICOM installation file, which can be downloaded at http://www.teledyne-api.com/manuals/.

## 7.2.2. DAS CONFIGURATION USING TERMINAL EMULATION PROGRAMS

Although Teledyne API recommends the use of APICOM, the DAS can also be accessed and configured through a terminal emulation program such as HyperTerminal (see example in Figure 7-4).

To do this:

- All configuration commands must be created and edited off line (e.g. cut & pasted in from a text file or word processor) following a strict syntax (see below for example).
- The script is then uploaded via the instrument's RS-232 port(s).

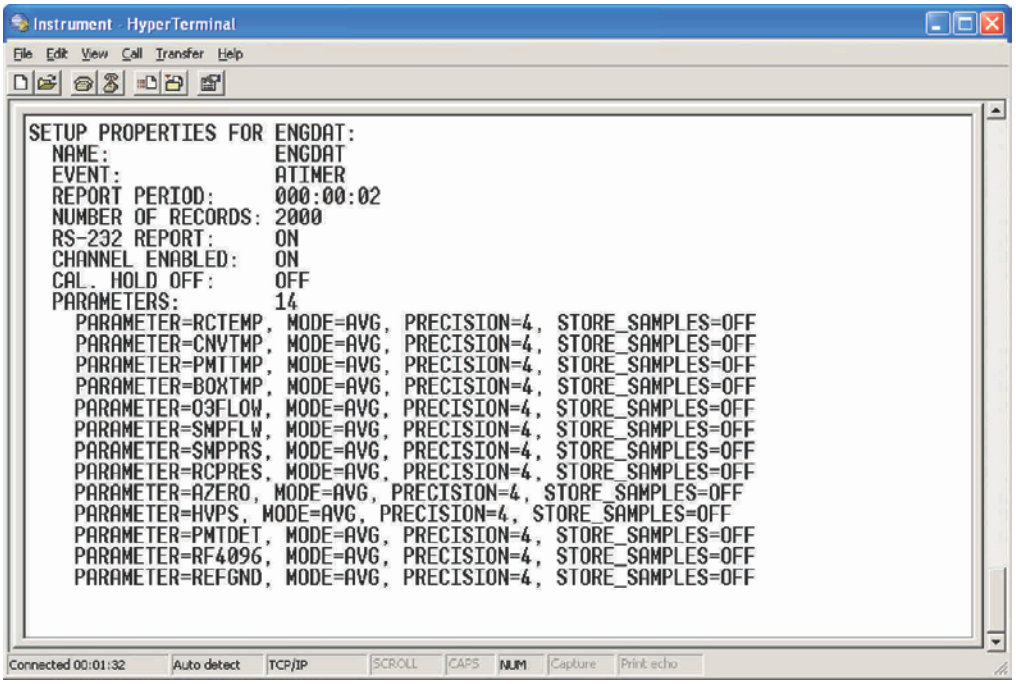


**Figure 7-4: DAS Configuration Through a Terminal Emulation Program**

Both of the above steps are best started by:

1. Downloading the default DAS configuration.
2. Getting familiar with its command structure and syntax conventions.
3. Altering a copy of the original file offline.
4. Uploading the new configuration into the analyzer.

**IMPORTANT**

**IMPACT ON READINGS OR DATA**

**Whereas the editing, adding and deleting of DAS channels and parameters of one channel through the front-panel control buttons can be done without affecting the other channels, uploading a DAS configuration script to the analyzer through its communication ports will erase all data, parameters and channels by replacing them with the new DAS configuration. Backup of data and the original DAS configuration is advised before attempting any DAS changes.**

Refer to Section 8.2.1 for details on remote access to and from the T300/T300M Analyzer via the instrument's COMM ports.

# 8. REMOTE OPERATION

This section provides information needed when using external digital and serial I/O for remote operation. It assumes that the electrical connections have been made as described in Section3.3.1.

The T300 can be remotely configured, calibrated or queried for stored data through the rear panel serial ports, via either **Computer mode** (using a personal computer) or **Interactive mode** (using a terminal emulation program).

## 8.1. COMPUTER MODE

Computer mode is used when the analyzer is connected to a computer with a dedicated interface program such as APICOM.

### 8.1.1. REMOTE CONTROL VIA APICOM

APICOM is an easy-to-use, yet powerful interface program that allows a user to access and control any of Teledyne API's main line of ambient and stack-gas instruments from a remote connection through direct cable, modem or Ethernet. Running APICOM, a user can:

- Establish a link from a remote location to the T300 through direct cable connection via RS-232 modem or Ethernet.
- View the instrument's front panel and remotely access all functions that could be accessed manually on the instrument.
- Remotely edit system parameters and set points.
- Download, view, graph and save data for predictive diagnostics or data analysis.
- Retrieve, view, edit, save and upload DAS configurations (Section 7.2.1).
- Check on system parameters for trouble-shooting and quality control.

APICOM is very helpful for initial setup, data analysis, maintenance and troubleshooting. Refer to the APICOM manual available for download from http://www.teledyne-api.com/software/apicom/.

# 8.2. INTERACTIVE MODE

Interactive mode is used with a terminal emulation programs or a "dumb" computer terminal.

## 8.2.1. REMOTE CONTROL VIA A TERMINAL EMULATION PROGRAM

Start a terminal emulation program such as HyperTerminal. All configuration commands must be created following a strict syntax or be pasted in from an existing text file, which was edited offline and then uploaded through a specific transfer procedure. The commands that are used to operate the analyzer in this mode are listed in Table 8-1 and in Appendix A.

### 8.2.1.1. HELP COMMANDS IN INTERACTIVE MODE

**Table 8-1: Interactive Mode Software Commands**

| COMMAND | Function |
|---|---|
| **Control-T** | Switches the analyzer to terminal mode (echo, edit). If mode flags 1 & 2 are OFF, the interface can be used in interactive mode with a terminal emulation program. |
| **Control-C** | Switches the analyzer to computer mode (no echo, no edit). |
| **CR(carriage return)** | A carriage return is required after each command line is typed into the terminal/computer. The command will not be sent to the analyzer to be executed until this is done. On personal computers, this is achieved by pressing the ENTER button. |
| **BS (backspace)** | Erases one character to the left of the cursor location. |
| **ESC(escape)** | Erases the entire command line. |
| **?[ID] CR** | This command prints a complete list of available commands along with the definitions of their functionality to the display device of the terminal or computer being used. The ID number of the analyzer is only necessary if multiple analyzers are on the same communications line, such as the multi-drop setup. |

### 8.2.1.2. COMMAND SYNTAX

Commands are not case-sensitive and all arguments within one command (i.e. ID numbers, key words, data values, etc.) must be separated with a space character.

All Commands follow the syntax:

**X [ID] COMMAND <CR>**

Where

X is the command type (one letter) that defines the type of command. Allowed designators are listed in Appendix A-6.

[ID] is the machine identification number (Section 5.7.1). Example: the Command "? 700" followed by a carriage return would print the list of available commands for the revision of software currently installed in the instrument assigned ID Number 700.

COMMAND is the command designator: This string is the name of the command being issued (LIST, ABORT, NAME, EXIT, etc.). Some commands may have additional arguments that define how the command is to be executed. Press ? <CR> or refer to Appendix A-6 for a list of available command designators.

<CR> is a carriage return. All commands must be terminated by a carriage return (usually achieved by pressing the ENTER button on a computer).

**Table 8-2: Teledyne API's Serial I/O Command Types**

| COMMAND | COMMAND TYPE |
|---|---|
| **C** | Calibration |
| **D** | Diagnostic |
| **L** | Logon |
| **T** | Test measurement |
| **V** | Variable |
| **W** | Warning |

### 8.2.1.3. **DATA TYPES**

Data types consist of integers, hexadecimal integers, floating-point numbers, Boolean expressions and text strings.

**Integer data**: Used to indicate integral quantities such as a number of records, a filter length, etc.

- They consist of an optional plus or minus sign, followed by one or more digits.
- For example, +1, -12, 123 are all valid integers.

**Hexadecimal integer data**: Used for the same purposes as integers.

- They consist of the two characters "0x," followed by one or more hexadecimal digits (0-9, A-F, a-f), which is the 'C' programming language convention.
- No plus or minus sign is permitted.
- For example, 0x1, 0x12, 0x1234abcd are all valid hexadecimal integers.

**Floating-point number**: Used to specify continuously variable values such as temperature set points, time intervals, warning limits, voltages, etc.

- They consist of an optional plus or minus sign, followed by zero or more digits, an optional decimal point and zero or more digits.
- At least one digit must appear before or after the decimal point.
- Scientific notation is not permitted.
- For example, +1.0, 1234.5678, -0.1, 1 are all valid floating-point numbers.

**Boolean expressions**: Used to specify the value of variables or I/O signals that may assume only two values.

- They are denoted by the key words **ON** and **OFF**.

**Text strings**: Used to represent data that cannot be easily represented by other data types, such as data channel names, which may contain letters and numbers.

- They consist of a quotation mark, followed by one or more printable characters, including spaces, letters, numbers, and symbols, and a final quotation mark.
- For example, "a", "1", "123abc", and "()[]<>" are all valid text strings.
- It is not possible to include a quotation mark character within a text string.

Some commands allow you to access variables, messages, and other items. When using these commands,

- you must type the entire name of the item
- you cannot abbreviate any names.

#### 8.2.1.4. **STATUS REPORTING**

Reporting of status messages as an audit trail is one of the three principal uses for the RS-232 interface (the other two being the command line interface for controlling the instrument and the download of data in electronic format). You can effectively disable the reporting feature by setting the interface to quiet mode (see Section 6.2.1, Table 6-1).

Status reports include warning messages, calibration and diagnostic status messages. Refer to Appendix A-3 for a list of the possible messages, and this for information on controlling the instrument through the RS-232 interface.

#### 8.2.1.5. **GENERAL MESSAGE FORMAT**

All messages from the instrument (including those in response to a command line request) are in the format:

**X DDD:HH:MM [Id] MESSAGE<CRLF>**

Where:

| | |
|---|---|
| X | is a command type designator, a single character indicating the message type, as shown in the Table 8-2. |
| DDD:HH:MM | is the time stamp, the date and time when the message was issued. It consists of the Day-of-year (DDD) as a number from 1 to 366, the hour of the day (HH) as a number from 00 to 23, and the minute (MM) as a number from 00 to 59. |
| [ID] | is the analyzer ID, a number with 1 to 4 digits. |
| MESSAGE | is the message content that may contain warning messages, test measurements, variable values, etc. |
| <CRLF> | is a carriage return / line feed pair, which terminates the message. |

The uniform nature of the output messages makes it easy for a host computer to parse them into an easy structure. Keep in mind that the front panel display does not give any information on the time a message was issued, hence it is useful to log such messages for trouble-shooting and reference purposes. Terminal emulation programs such as HyperTerminal can capture these messages to text files for later review.

## 8.3. REMOTE ACCESS BY MODEM

The T300/T300M can be connected to a modem for remote access. This requires a cable between the analyzer's COMM port and the modem, typically a DB-9F to DB-25M cable (available from Teledyne API with P/N WR0000024).

Once the cable has been connected, check to make sure:

- The DTE-DCE is in the DCE position.
- The T300/T300M COMM port is set for a baud rate that is compatible with the modem,
- The modem is designed to operate with an 8-bit word length with one stop bit.
- The MODEM ENABLE communication mode is turned on (Mode 64, see Table 6-1).

Once this is completed, the appropriate setup command line for your modem can be entered into the analyzer. The default setting for this feature is:

**AT Y0 &D0 &H0 &I0 S0=2 &B0 &N6 &M0 E0 Q1 &W0**

This string can be altered to match your modem's initialization and can be up to 100 characters long.

To change this setting press:

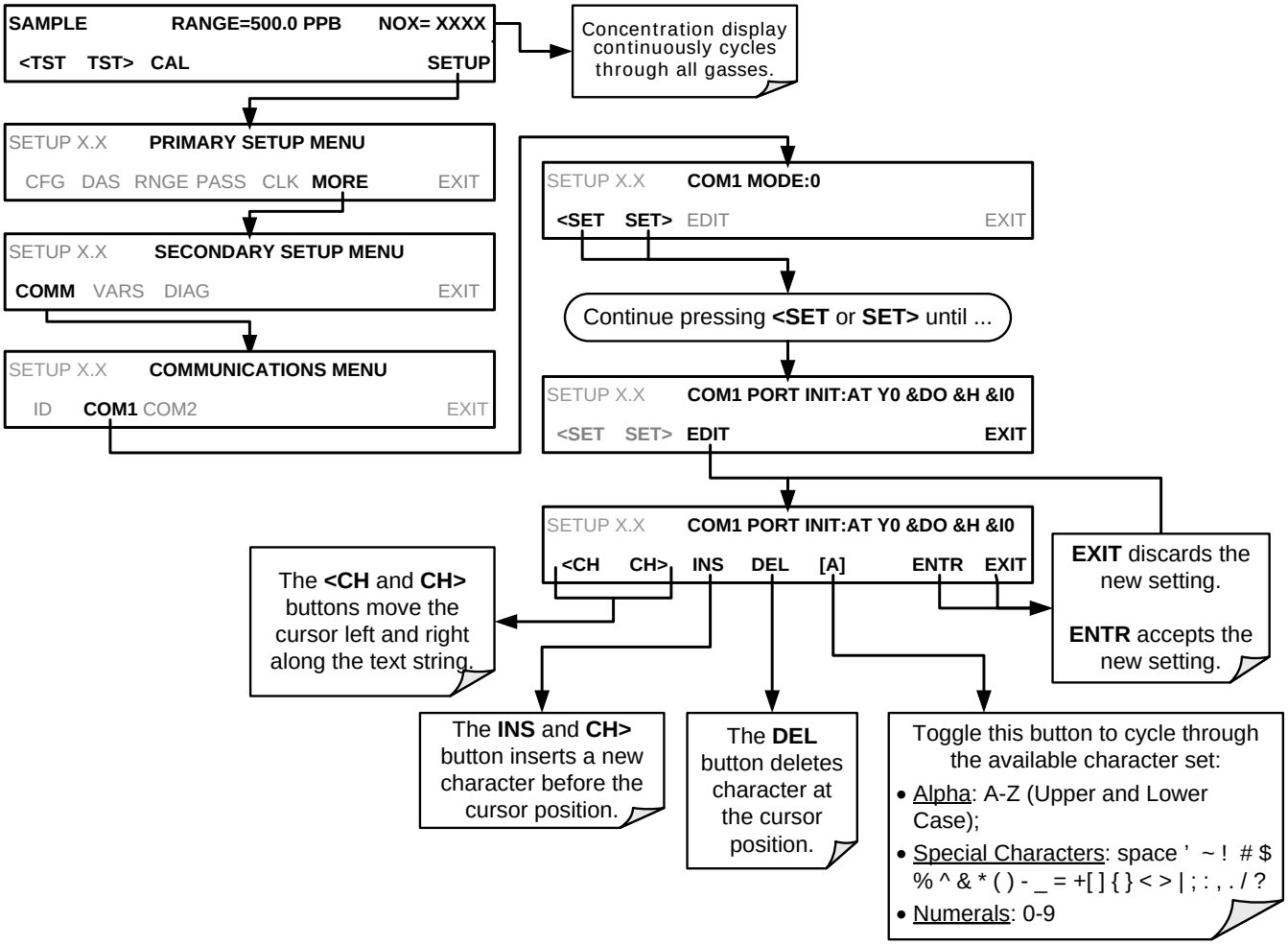

To initialize the modem press:

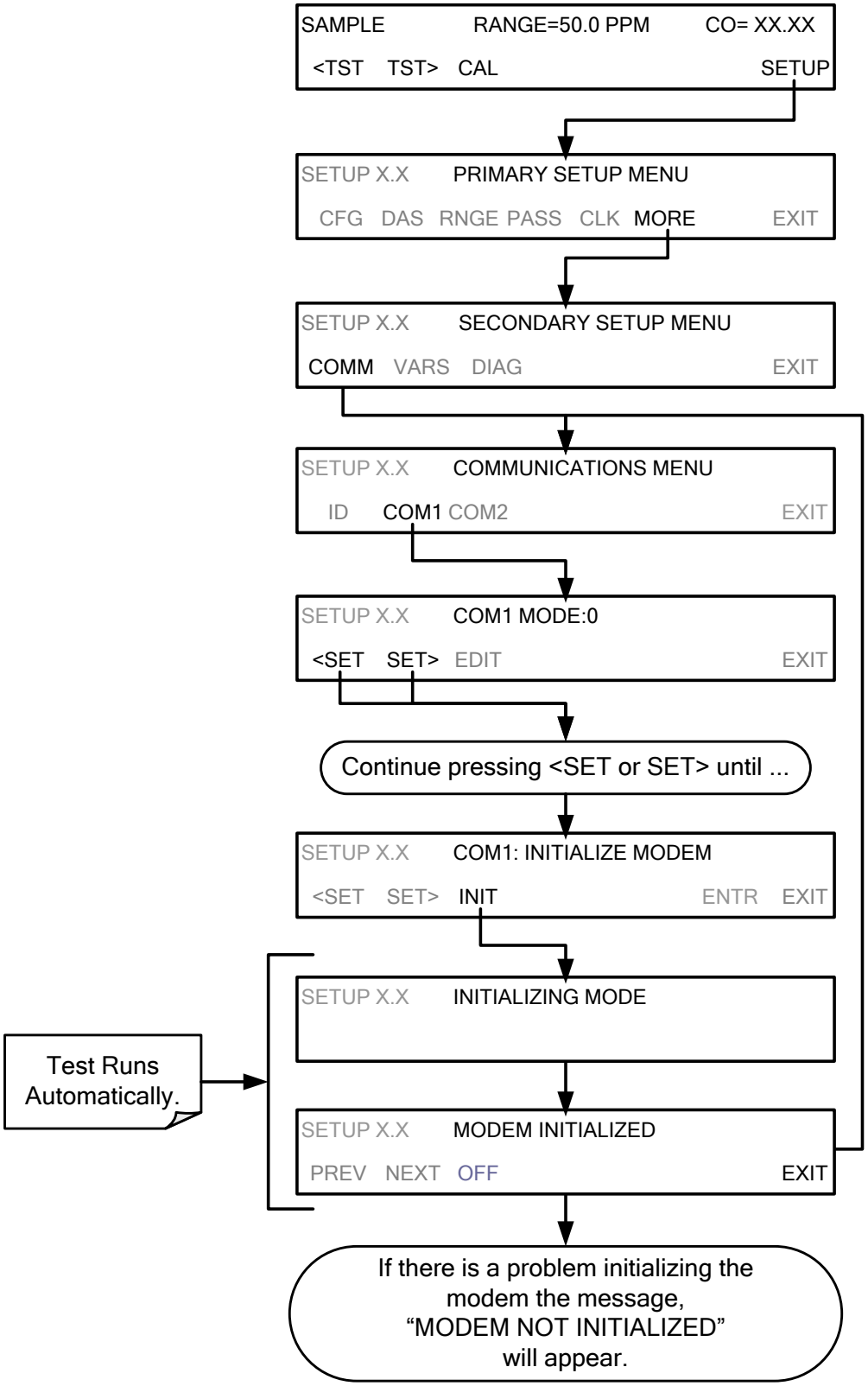

# 8.4. PASSWORD SECURITY FOR SERIAL REMOTE COMMUNICATIONS

In order to provide security for remote access of the T300/T300M, a **LOGON** feature can be enabled to require a password before the instrument will accept commands. This is done by turning on the **SECURITY MODE** (Mode 4, Table 6-1). Once the **SECURITY MODE** is enabled, the following items apply.

- A password is required before the port will respond or pass on commands.
- If the port is inactive for one hour, it will automatically logoff, which can also be achieved with the LOGOFF command.
- Three unsuccessful attempts to log on with an incorrect password will cause subsequent logins to be disabled for 1 hour, even if the correct password is used.
- If not logged on, the only active command is the '?' request for the help screen.
- The following messages will be returned at logon:
- LOGON SUCCESSFUL - Correct password given
- LOGON FAILED - Password not given or incorrect
- LOGOFF SUCCESSFUL - Connection terminated successfully

To log on to the T300/T300M Analyzer with **SECURITY MODE** feature enabled, type:

**LOGON 940331**

940331 is the default password. To change the default password, use the variable RS-232_PASS issued as follows:

V RS-232_PASS=NNNNNN

Where N is any numeral between 0 and 9.

This page intentionally left blank.

# 9. CALIBRATION PROCEDURES

This section describes the calibration procedures for the T300/T300M. All of the methods described in this section can be initiated and controlled through the COM ports.

**IMPORTANT**

**IMPACT ON READINGS OR DATA**

**If you are using the T300/T300M for US-EPA controlled monitoring, refer to Section 10 for information on the EPA calibration protocol.**

**Note**

**Throughout this section are various diagrams showing pneumatic connections between the T300/T300M and various other pieces of equipment such as calibrators and zero air sources.**

**These diagrams are only intended to be schematic representations of these connections and do not reflect actual physical locations of equipment and fitting location or orientation.**

**Contact your regional EPA or other appropriate governing agency for more detailed recommendations.**

## 9.1. CALIBRATION PREPARATIONS

The calibration procedures in this section assume that the range mode, analog range and units of measure have already been selected for the analyzer. If this has not been done, please do so before continuing (see Section 5.7 for instructions).

### 9.1.1. REQUIRED EQUIPMENT, SUPPLIES, AND EXPENDABLES

Calibration of the T300/T300M Analyzer requires specific equipment and supplies. These include, but are not limited to, the following:

- Zero-air source
- Span gas source
- Gas lines - All Gas lines should be PTFE (Teflon), FEP, glass, stainless steel or brass
- A recording device such as a strip-chart recorder and/or data logger (optional) (For electronic documentation, the internal data acquisition system DAS can be used).
- Traceability Standards

### 9.1.1.1. **ZERO AIR**

Zero air or zero calibration gas is defined as a gas that is similar in chemical composition to the measured medium but without the gas to be measured by the analyzer.

For the T300/T300M zero air should contain less than 25 ppb of CO and other major interfering gases such as CO and Water Vapor. It should have a dew point of -5°C or less.

If your application is not a measurement in ambient air, the zero calibration gas should be matched to the composition of the gas being measured.

- Pure nitrogen ($N_2$) can be used as a zero gas for applications where CO is measured in nitrogen.
- If your analyzer is equipped with an external zero air scrubber option, it is capable of creating zero air from ambient air.

For analyzers without the zero air scrubber, a zero air generator such as the Teledyne API's T701 can be used. Please visit the company website for more information.

### 9.1.1.2. **SPAN GAS**

Span Gas is a gas specifically mixed to match the chemical composition of the type of gas being measured at near full scale of the desired measurement range. It is recommended that the span gas used have a concentration equal to 80-90% of the full measurement range.

If Span Gas is sourced directly from a calibrated, pressurized tank, the gas mixture should be CO mixed with Zero Air or $N_2$ at the required ratio.

For oxygen measurements using the optional $O_2$ sensor, we recommend a reference gas of 21% $O_2$ in $N_2$.

- For quick checks, ambient air can be used at an assumed concentration of 20.8%.
- Generally, $O_2$ concentration in dry, ambient air varies by less than 1%.

### 9.1.1.3. **CALIBRATION GAS STANDARDS AND TRACEABILITY**

All equipment used to produce calibration gases should be verified against standards of the National Institute for Standards and Technology (NIST). To ensure NIST traceability, we recommend to acquire cylinders of working gas that are certified to be traceable to NIST Standard Reference Materials (SRM). These are available from a variety of commercial sources.

**Table 9-1: NIST-SRMs Available for Traceability of CO Calibration Gases**

| NIST-SRM | Type | Nominal Concentration |
|---|---|---|
| 680b | CO in $N_2$ | 500 ppm |
| 1681b | CO in $N_2$ | 1000 ppm |
| 2613a | CO in Zero Air | 20 ppm |
| 2614a | CO in Zero Air | 45 ppm |
| 2659a1 | $O_2$ in $N_2$ | 21% by weight |
| 2626a | $CO_2$ in $N_2$ | 4% by weight |
| 27452 | $CO_2$ in $N_2$ | 16% by weight |

[1] Used to calibrate optional $O_2$ sensor. [2] Used to calibrate optional $CO_2$ sensor.

**Note**

**It is generally a good idea to use 80% of the reporting range for that channel for the span point calibration.**

**For instance, if the reporting range of the instrument is set for 50.0 PPM, the proper span gas would be 40.0 PPM.**

### 9.1.2. DATA RECORDING DEVICES

A strip chart recorder, data acquisition system or digital data acquisition system should be used to record data from the serial or analog outputs of the T300/T300M.

- If analog readings are used, the response of the recording system should be checked against a NIST traceable voltage source or meter.
- Data recording devices should be capable of bi-polar operation so that negative readings can be recorded.
- For electronic data recording, the T300/T300M provides an internal data acquisition system (DAS), which is described in detail in Section 7.

APICOM, a remote control program, is also provided as a convenient and powerful tool for data handling, download, storage, quick check and plotting (see Section 7.2.1).

## 9.2. MANUAL CALIBRATION

**IMPORTANT**

**IMPACT ON READINGS OR DATA**
**ZERO/SPAN CALIBRATION CHECKS VS. ZERO/SPAN CALIBRATION**

**Pressing the ENTR button during the following procedure resets the stored values for OFFSET and SLOPE and alters the instrument's Calibration.**

**This should ONLY BE DONE during an actual calibration of the T300/T300M.**

**NEVER press the ENTR button if you are only checking calibration. If you wish to perform a calibration CHECK, do not press ENTR and refer to Section 9.2.2.**

## 9.2.1. SETUP FOR BASIC CALIBRATION CHECKS AND CALIBRATION

**STEP ONE:** Connect the Sources of Zero Air and Span Gas as shown below.

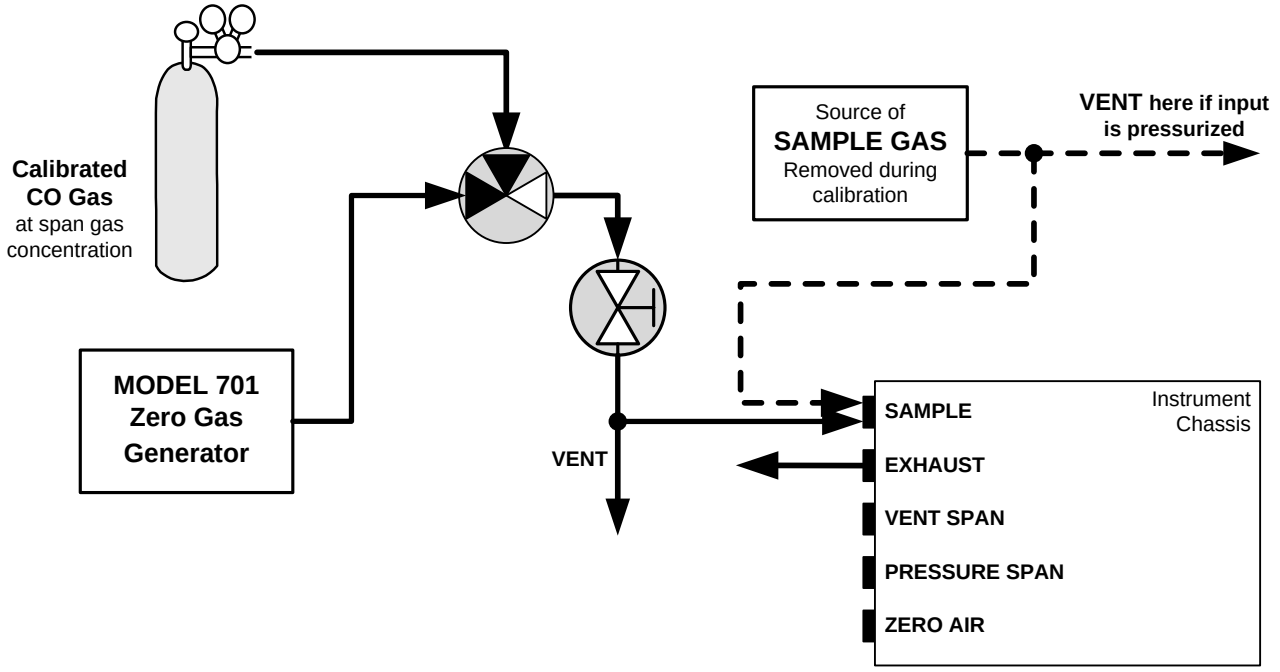


**Figure 9-1: Pneumatic Connections – Basic Configuration – Using Bottled Span Gas**

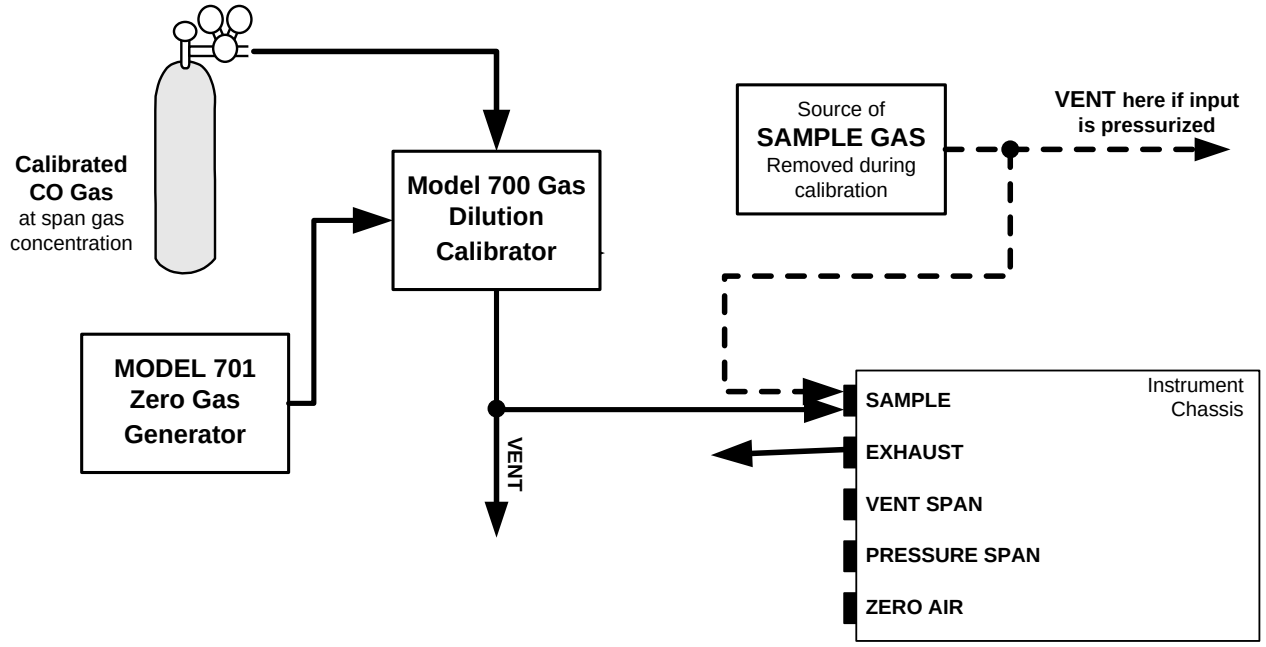


**Figure 9-2: Pneumatic Connections – Basic Configuration – Using Gas Dilution Calibrator**

## 9.2.2. **PERFORMING A BASIC MANUAL CALIBRATION CHECK**

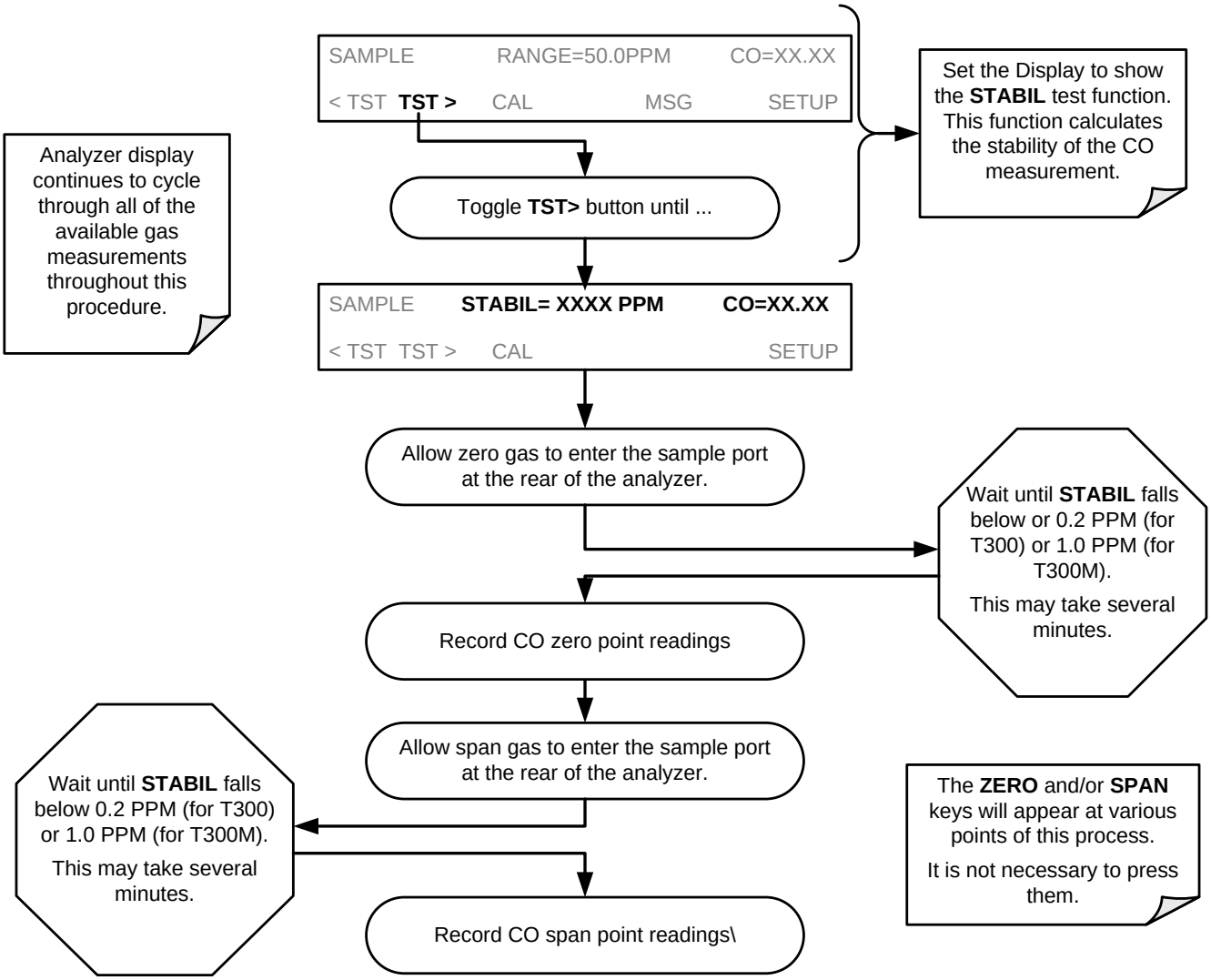

## 9.2.3. PERFORMING A BASIC MANUAL CALIBRATION

The following section describes the basic method for manually calibrating the T300/T300M.

If the analyzer's reporting range is set for the **AUTO** range mode, a step will appear for selecting which range is to be calibrated (**LOW** or **HIGH**). Each of these two ranges **MUST** be calibrated separately.

**IMPORTANT**

**IMPACT ON READINGS OR DATA**

**If the ZERO or SPAN buttons are not displayed during zero or span calibration, the measured concentration value during this time is out of the range allowed for a reliable calibration. Refer to Section 11 for troubleshooting tips.**

### 9.2.3.1. SETTING THE EXPECTED SPAN GAS CONCENTRATION

**Note**

**When setting expected concentration values, consider impurities in your span gas.**

The expected CO span gas concentration should be 80% of the reporting range of the instrument (see Section 5.4.1).

The default factory setting is 40 ppm. To set the span gas concentration, press:

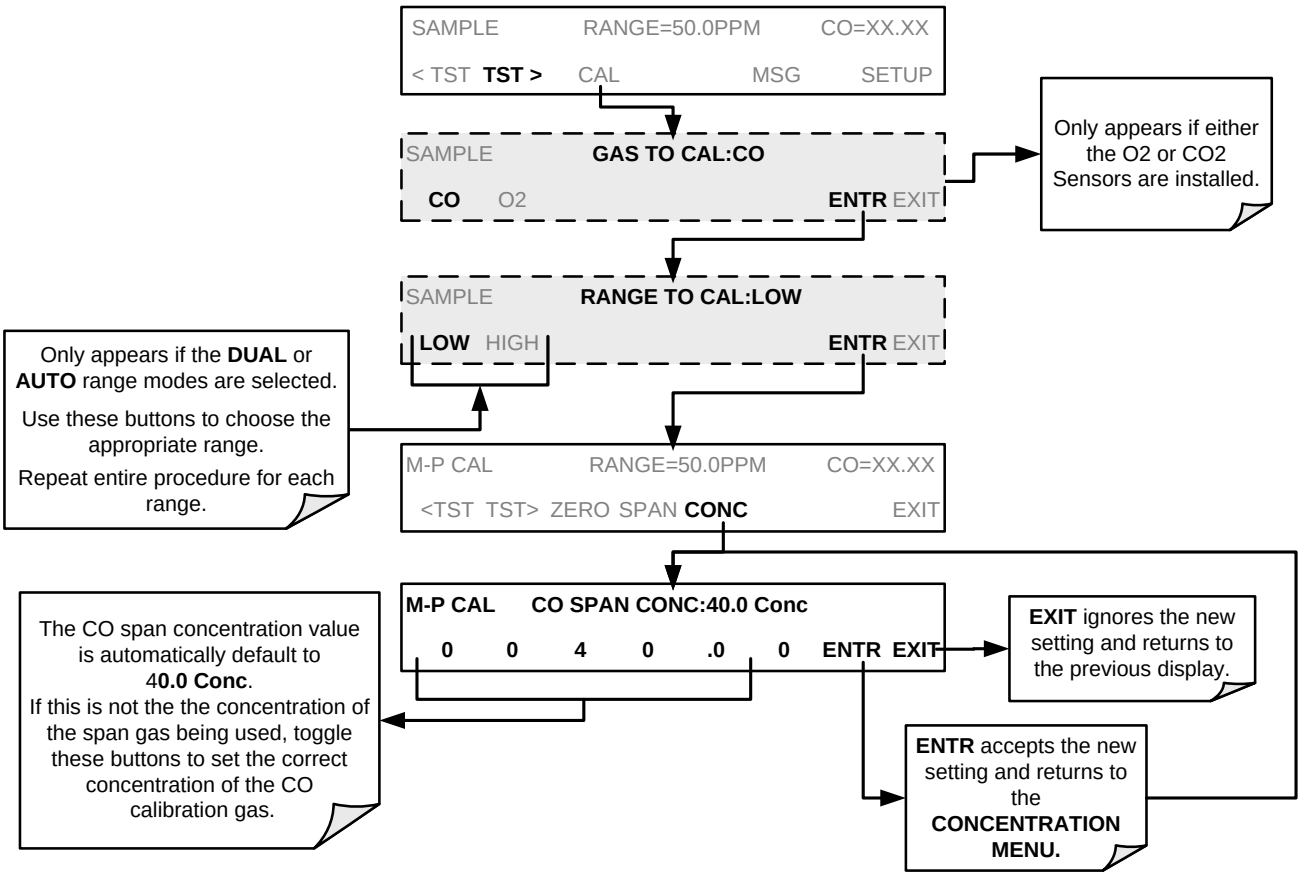


**IMPORTANT**

**IMPACT ON READINGS OR DATA**

**For this Initial Calibration it is important to independently verify the PRECISE CO Concentration Value of the SPAN gas.**

**If the source of the Span Gas is from a Calibrated Bottle, use the exact concentration value printed on the bottle.**

## 9.2.3.2. **ZERO/SPAN POINT CALIBRATION PROCEDURE**

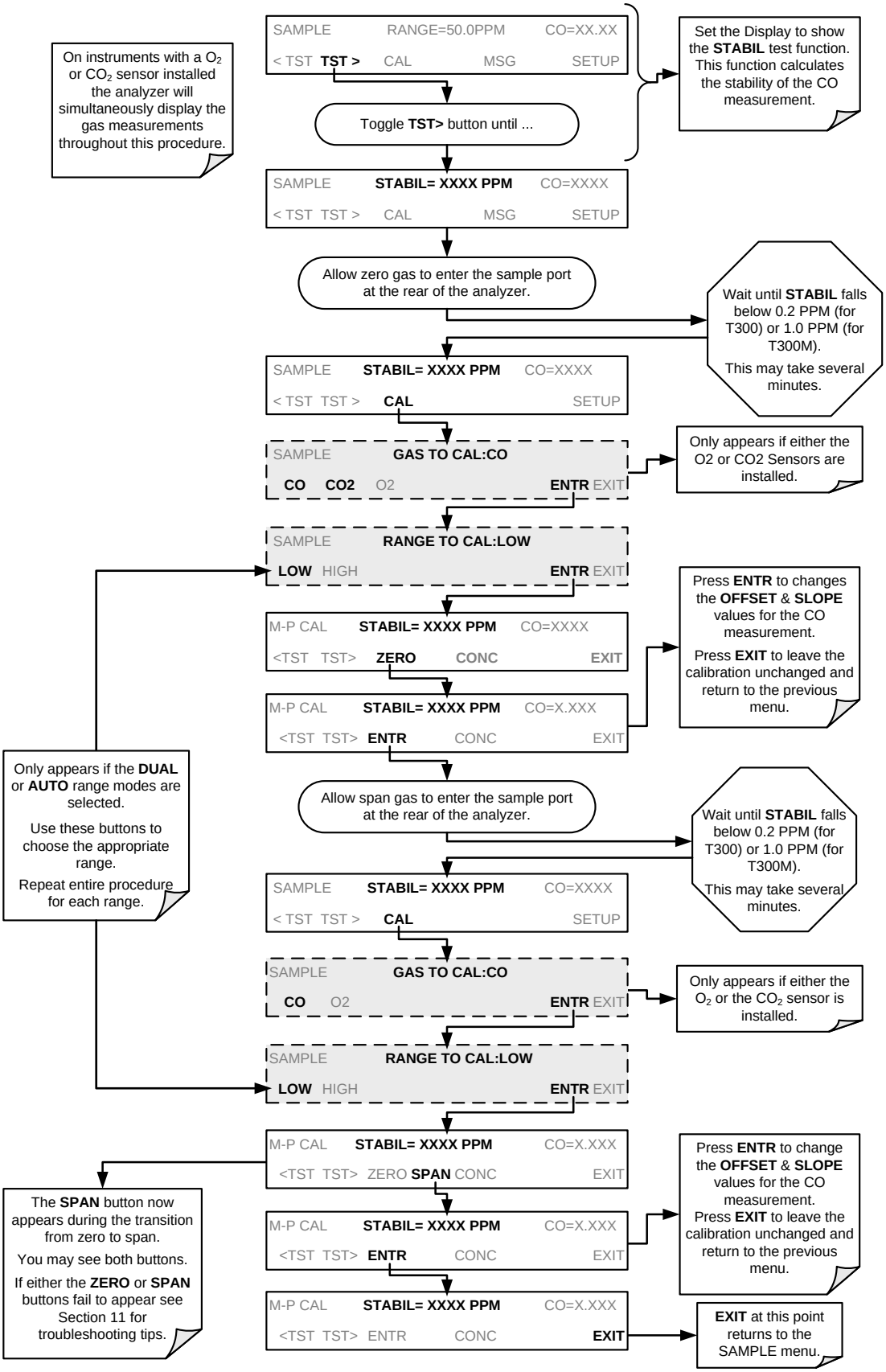

# 9.3. MANUAL CALIBRATION WITH ZERO/SPAN VALVES

There are a variety of valve options available on the T300/T300M for handling calibration gases (see Table 1-1 for descriptions of each).

Generally performing calibration checks and zero/span point calibrations on analyzers with these options installed is similar to the methods discussed in the previous sections of this section. The primary differences are:

- On instruments with Z/S valve options, zero air and span gas is supplied to the analyzer through other gas inlets besides the sample gas inlet.
- The zero and span calibration operations are initiated directly and independently with dedicated buttons (**CALZ** & **CALS**).

## 9.3.1. SETUP FOR CALIBRATION USING VALVE OPTIONS

Each of the various calibration valve options requires a different pneumatic setup that is dependent on the exact nature and number of valves present.

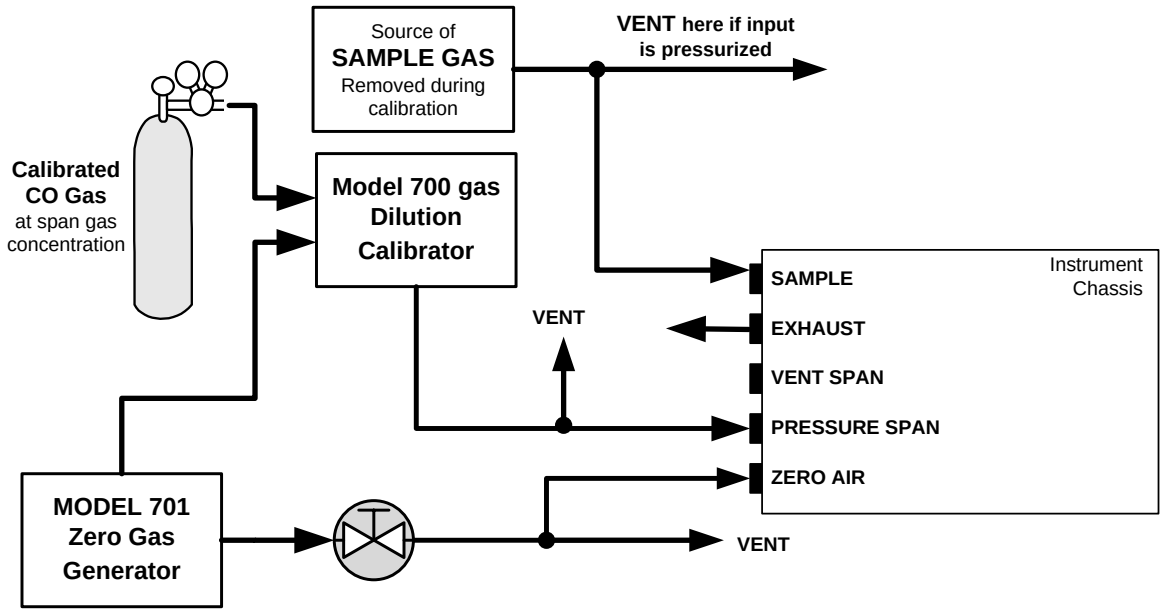


**Figure 9-3: Pneumatic Connections – Option 50A: Ambient Zero/Ambient Span Calibration Valves**

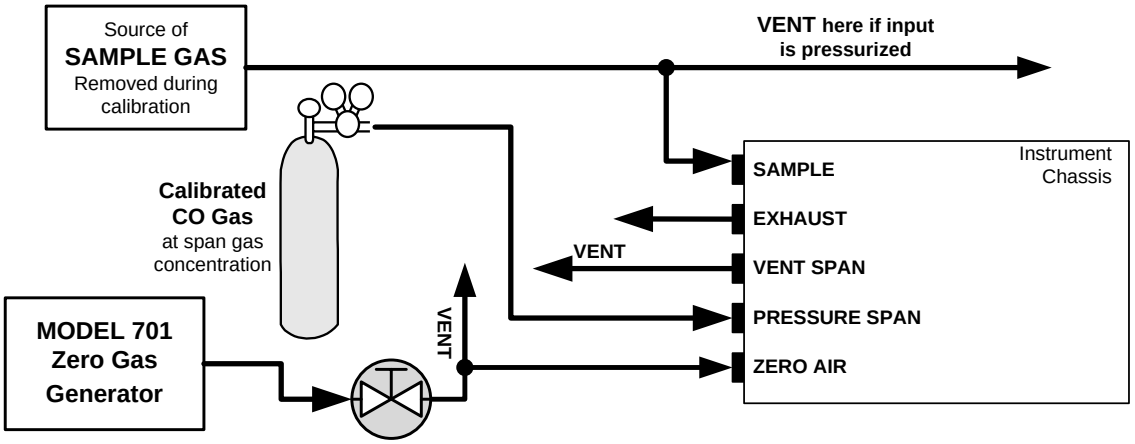


**Figure 9-4: Pneumatic Connections – Option 50B: Ambient Zero/Pressurized Span Calibration Valves**

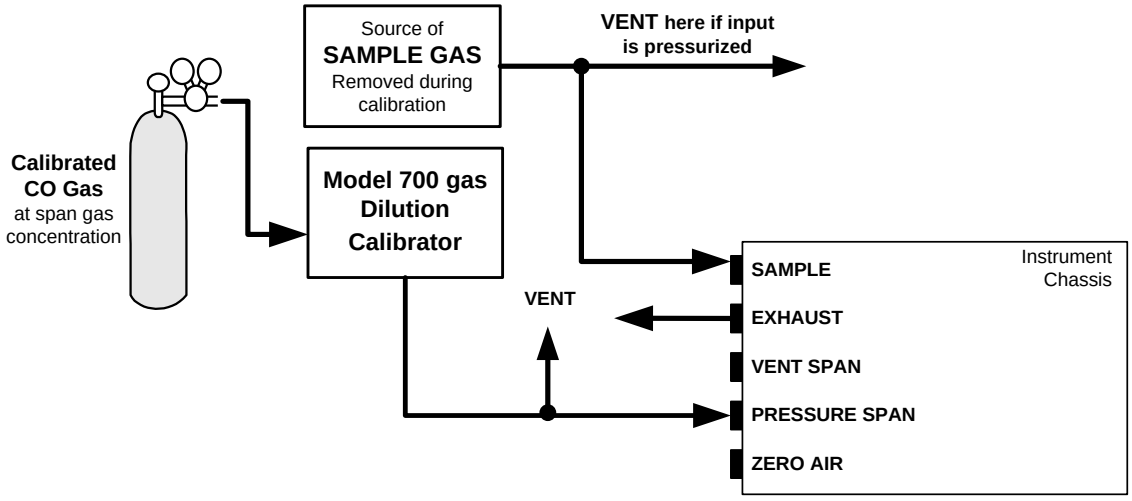


**Figure 9-5: Pneumatic Connections – Option 50H: Zero/Span Calibration Valves**

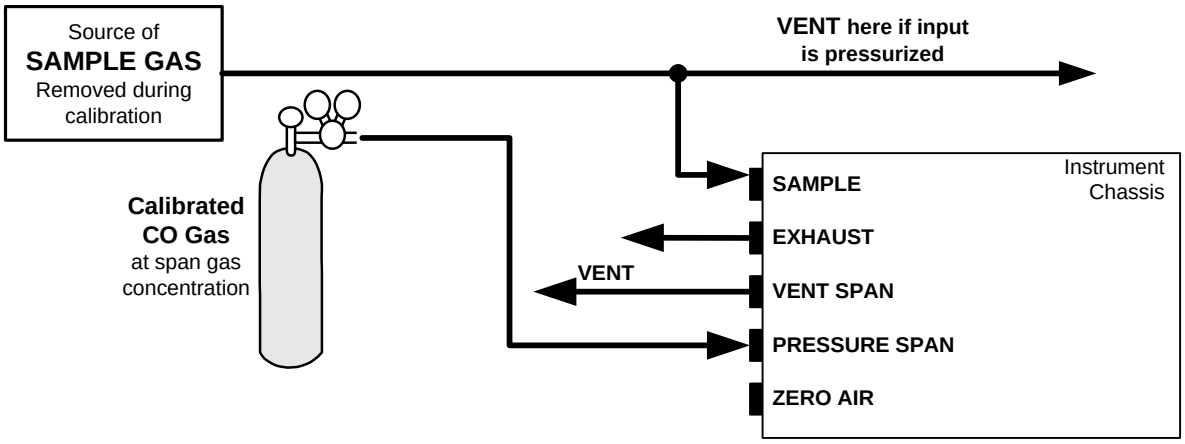


**Figure 9-6: Pneumatic Connections – Option 50E: Zero/Span Calibration Valves**

## 9.3.2. MANUAL CALIBRATION CHECKS WITH VALVE OPTIONS INSTALLED

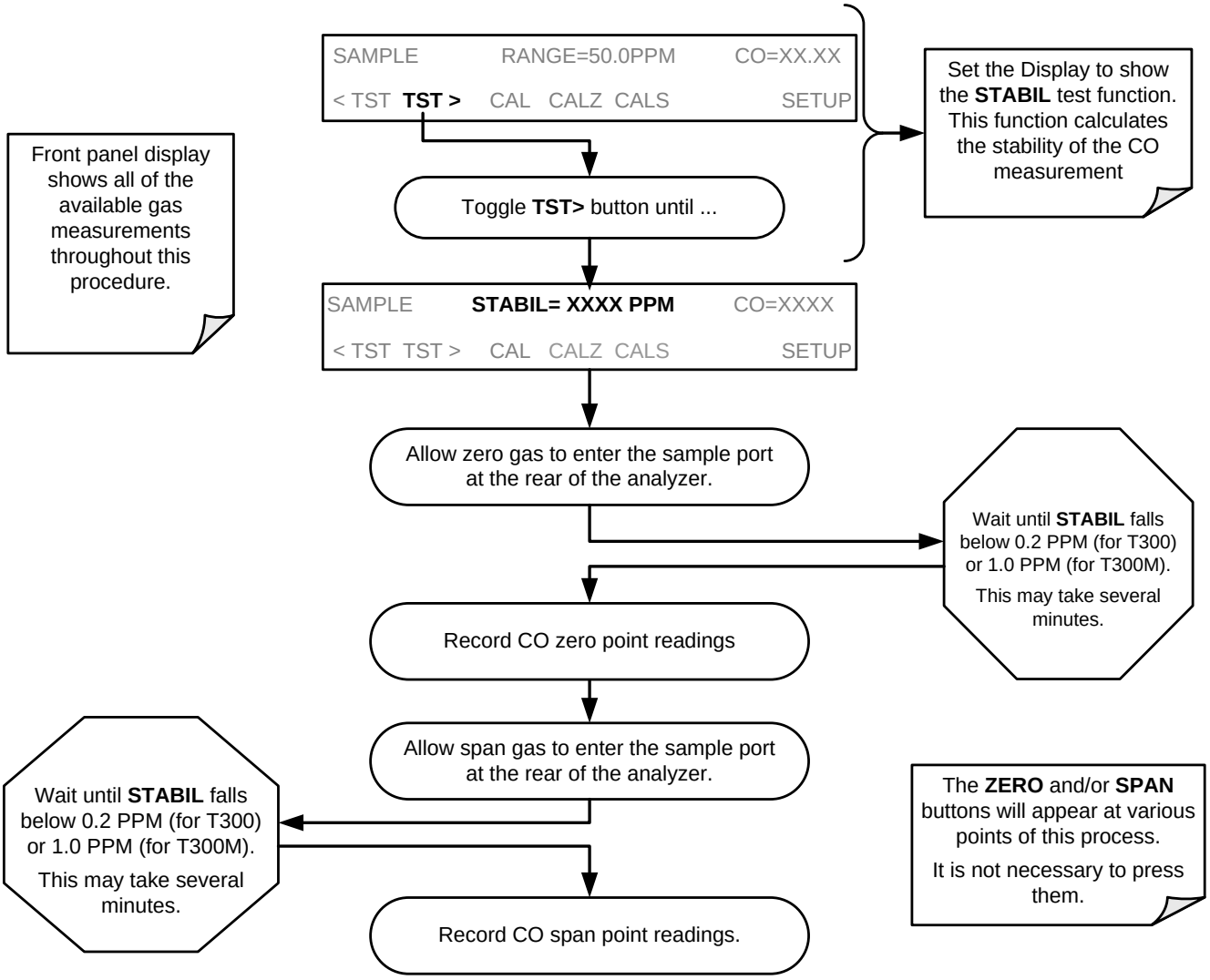

## 9.3.3. MANUAL CALIBRATION USING VALVE OPTIONS

The following section describes the basic method for manually calibrating the T300/T300M Analyzer.

If the analyzer's reporting range is set for the **DUAL** or **AUTO** range modes, a step will appear for selecting which range is to be calibrated (**LOW** or **HIGH**).

**IMPORTANT**

**IMPACT ON READINGS OR DATA**

**Each of these two ranges MUST be calibrated separately.**

### 9.3.3.1. SETTING THE EXPECTED SPAN GAS CONCENTRATION

**Note**

**When setting expected concentration values, consider impurities in your span gas.**

The expected CO span gas concentration should be 80% of the reporting range of the instrument (see Section 5.4.1). The default factory setting is 40 ppm.

To set the span gas concentration, press:

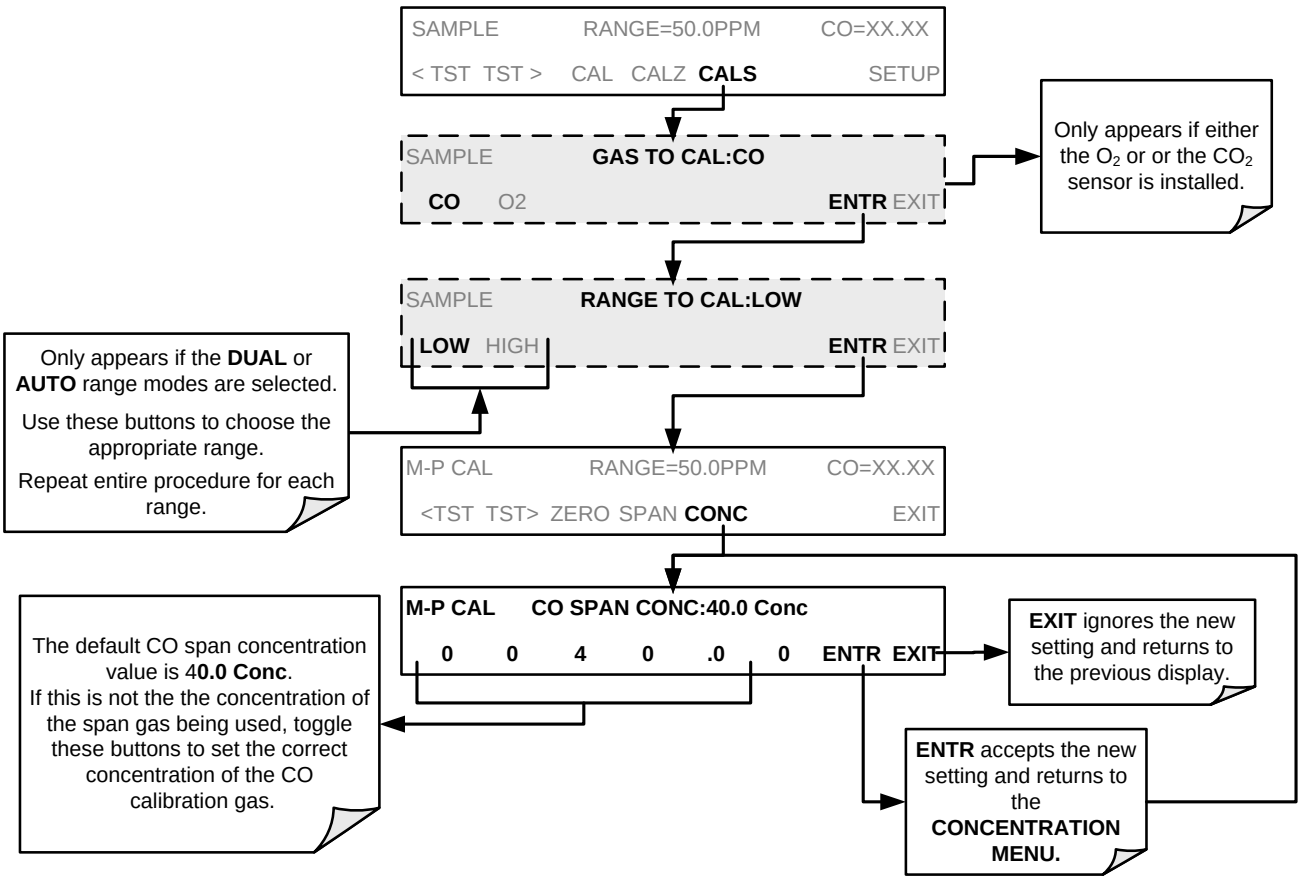


**IMPORTANT**

**IMPACT ON READINGS OR DATA**

**For this Initial Calibration it is important to independently verify the PRECISE CO Concentration Value of the SPAN gas.**

**If the source of the Span Gas is from a Calibrated Bottle, use the exact concentration value printed on the bottle.**

### 9.3.3.2. ZERO/SPAN POINT CALIBRATION PROCEDURE

The zero and cal operations are initiated directly and independently with dedicated buttons (**CALZ** & **CALS**).

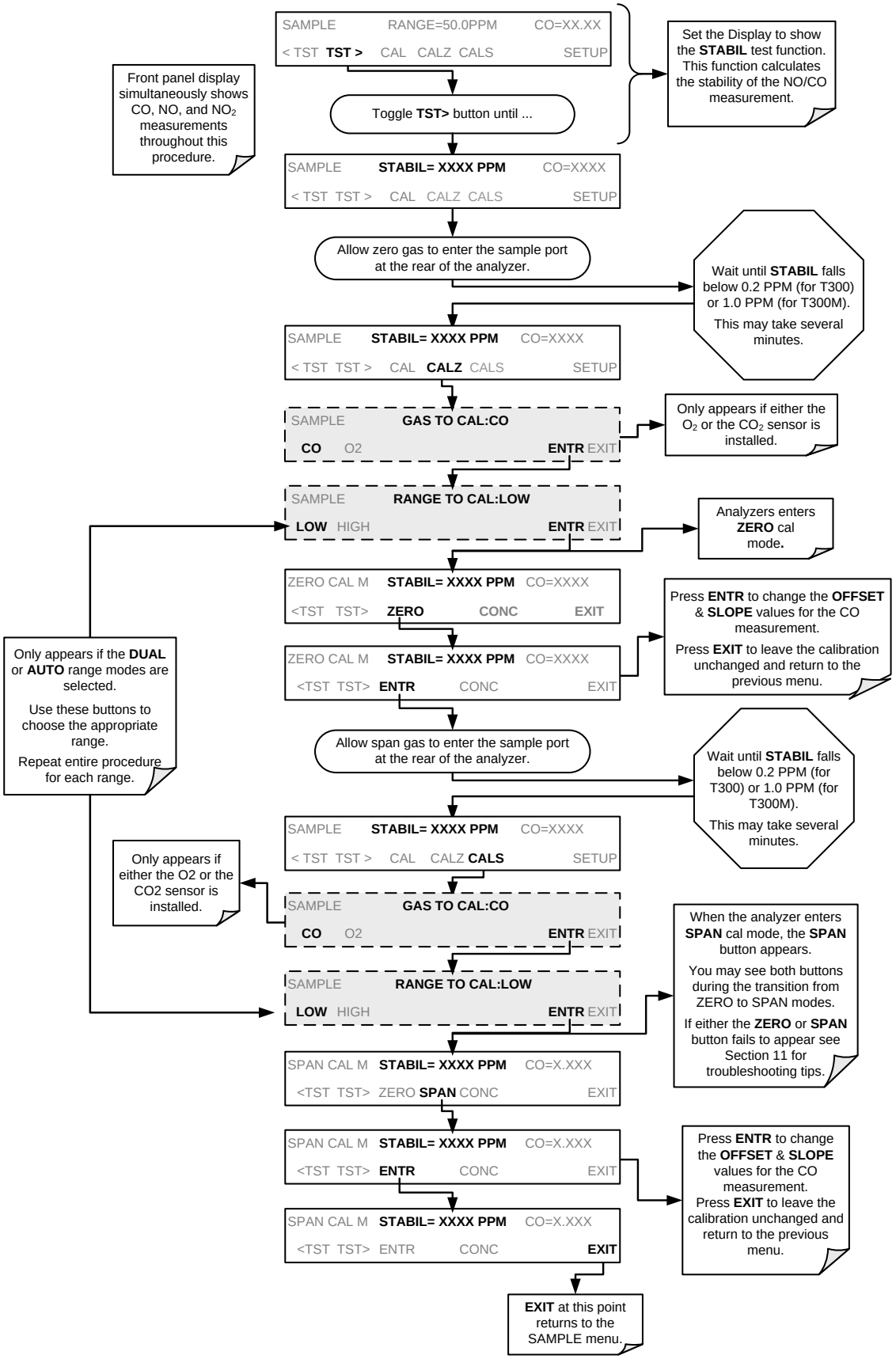
SAMPLE RANGE=50.0PPM CO=XX.XX
< TST TST > CAL CALZ CALS SETUP
Set the Display to show the STABIL test function. This function calculates the stability of the NO/CO measurement.
Front panel display simultaneously shows CO, NO, and NO2 measurements throughout this procedure.
Toggle TST> button until ...
SAMPLE STABIL= XXXX PPM CO=XXXX
< TST TST > CAL CALZ CALS SETUP
Allow zero gas to enter the sample port at the rear of the analyzer.
Wait until STABIL falls below 0.2 PPM (for T300) or 1.0 PPM (for T300M).
This may take several minutes.
SAMPLE STABIL= XXXX PPM CO=XXXX
< TST TST > CAL CALZ CALS SETUP
SAMPLE GAS TO CAL:CO
CO O2 ENTR EXIT
Only appears if either the O2 or the CO2 sensor is installed.
SAMPLE RANGE TO CAL:LOW
LOW HIGH ENTR EXIT
Analyzers enters ZERO cal mode.
ZERO CAL M STABIL= XXXX PPM CO=XXXX
<TST TST> ZERO CONC EXIT
Press ENTR to change the OFFSET & SLOPE values for the CO measurement.
Press EXIT to leave the calibration unchanged and return to the previous menu.
ZERO CAL M STABIL= XXXX PPM CO=XXXX
<TST TST> ENTR CONC EXIT
Only appears if the DUAL or AUTO range modes are selected.
Use these buttons to choose the appropriate range.
Repeat entire procedure for each range.
Allow span gas to enter the sample port at the rear of the analyzer.
Wait until STABIL falls below 0.2 PPM (for T300) or 1.0 PPM (for T300M).
This may take several minutes.
SAMPLE STABIL= XXXX PPM CO=XXXX
< TST TST > CAL CALZ CALS SETUP
Only appears if either the O2 or the CO2 sensor is installed.
SAMPLE GAS TO CAL:CO
CO O2 ENTR EXIT
When the analyzer enters SPAN cal mode, the SPAN button appears.
You may see both buttons during the transition from ZERO to SPAN modes.
If either the ZERO or SPAN button fails to appear see Section 11 for troubleshooting tips.
SAMPLE RANGE TO CAL:LOW
LOW HIGH ENTR EXIT
SPAN CAL M STABIL= XXXX PPM CO=X.XXX
<TST TST> ZERO SPAN CONC EXIT
SPAN CAL M STABIL= XXXX PPM CO=X.XXX
<TST TST> ENTR CONC EXIT
Press ENTR to change the OFFSET & SLOPE values for the CO measurement.
Press EXIT to leave the calibration unchanged and return to the previous menu.
SPAN CAL M STABIL= XXXX PPM CO=X.XXX
<TST TST> ENTR CONC EXIT
EXIT at this point returns to the SAMPLE menu.

#### 9.3.3.3. USE OF ZERO/SPAN VALVE WITH REMOTE CONTACT CLOSURE

Contact closures for controlling calibration and calibration checks are located on the rear panel **CONTROL IN** connector. Instructions for setup and use of these contacts can be found in Section 3.3.1.6.

When the appropriate contacts are closed for at least 5 seconds, the instrument switches into zero, or span calibration mode and any internal zero/span valves installed will be automatically switched to the appropriate configuration.

- The remote calibration contact closures may be activated in any order.
- It is recommended that contact closures remain closed for at least 10 minutes to establish a reliable reading.
- The instrument will stay in the selected mode for as long as the contacts remain closed.

If contact closures are being used in conjunction with the analyzer's AutoCal (see Section 9.4) feature and the AutoCal attribute "**CALIBRATE"** is enabled, the T300/T300M will not recalibrate the analyzer until the contact is opened. At this point, the new calibration values will be recorded before the instrument returns to **Sample Mode**.

If the AutoCal attribute "**CALIBRATE"** is disabled, the instrument will return to **Sample Mode**, leaving the instrument's internal calibration variables unchanged.

## 9.4. AUTOMATIC ZERO/SPAN CAL/CHECK (AUTOCAL)

The AutoCal system allows unattended periodic operation of the Z**ERO/SPAN** valve options by using the T300/T300M Analyzer's internal time of day clock. AutoCal operates by executing **SEQUENCES** programmed by the user to initiate the various calibration modes of the analyzer and open and close valves appropriately. It is possible to program and run up to three separate sequences (**SEQ1**, **SEQ2** and **SEQ3**). Each sequence can operate in one of three modes, or be disabled.

**Table 9-2: AUTOCAL Modes**

| MODE NAME | ACTION |
|---|---|
| **DISABLED** | Disables the Sequence. |
| **ZERO** | Causes the Sequence to perform a Zero calibration/check. |
| **ZERO-SPAN** | Causes the Sequence to perform a Zero point calibration/check followed by a Span point calibration/check. |
| **SPAN** | Causes the Sequence to perform a Span concentration calibration/check only. |

For each mode, there are seven parameters that control operational details of the SEQUENCE (see Table 9-3).

**Table 9-3: AutoCal Attribute Setup Parameters**

| ATTRIBUTE | ACTION |
|---|---|
| **TIMER ENABLED** | Turns on the Sequence timer. |
| **STARTING DATE** | Sequence will operate after Starting Date. |
| **STARTING TIME** | Time of day sequence will run. |
| **DELTA DAYS** | Number of days to skip between each Sequence execution.<br>• If set to 7, for example, the AutoCal feature will be enabled once every week on the same day. |
| **DELTA TIME** | Number of hours later each "Delta Days" Seq is to be run.<br>• If set to 0, the sequence will start at the same time each day. **Delta Time** is added to **Delta Days** for the total time between cycles.<br>• This parameter prevents the analyzer from being calibrated at the same daytime of each calibration day and prevents a lack of data for one particular daytime on the days of calibration. |
| **DURATION** | Number of minutes the sequence operates.<br>• This parameter needs to be set such that there is enough time for the concentration signal to stabilize.<br>• The STB parameter shows if the analyzer response is stable at the end of the calibration.<br>• This parameter is logged with calibration values in the DAS. |
| **CALIBRATE** | Enable to do a calibration – Disable to do a cal check only.<br>• This setting must be OFF for analyzers used in US EPA applications and with internal span gas generators installed and functioning. |
| **RANGE TO CAL** | LOW calibrates the low range, HIGH calibrates the high range. Applies only to auto and remote range modes; this property is not available in single and independent range modes. |

**Note**

**The CALIBRATE attribute (formerly called "dynamic calibration") must always be set to OFF for analyzers used in US EPA controlled applications that have internal span gas generators option installed.**

**Calibration of instruments used in US EPA related applications should only be performed using external sources of zero air and span gas with an accuracy traceable to EPA or NIST standards and supplied through the analyzer's sample port..**

The following example sets sequence #2 to do a zero-span calibration every other day starting at 2:15 PM on September 4, 2008, lasting 15 minutes, without calibration. This will start ½ hour later each iteration.

**Table 9-4: Example AutoCal Sequence**

| MODE AND ATTRIBUTE | VALUE | COMMENT |
|---|---|---|
| SEQUENCE | 2 | Define Sequence #2 |
| MODE | ZERO-SPAN | Select Zero and Span Mode |
| TIMER ENABLE | ON | Enable the timer |
| STARTING DATE | Sept. 4, 2008 | Start after Sept 4, 2008 |
| STARTING TIME | 14:15 | First Span starts at 2:15 PM |
| DELTA DAYS | 2 | Do Sequence #2 every other day |
| DELTA TIME | 00:30 | Do Sequence #2 ½ hr later each day |
| DURATION | 30.0 | Operate Span valve for 15 min |
| CALIBRATE | ON | Calibrate at end of Sequence |

**IMPORTANT**

**IMPACT ON READINGS OR DATA**

**The programmed STARTING_TIME must be a minimum of 5 minutes later than the real time clock for setting real time clock (See Section 5.6.4).**

**Avoid setting two or more sequences at the same time of the day. Any new sequence that is initiated whether from a timer, the COM ports or the contact closure inputs will override any sequence that is in progress.**

**IMPORTANT**

**IMPACT ON READINGS OR DATA**

**With CALIBRATE turned ON, the state of the internal setup variables DYN_SPAN and DYN_ZERO is set to ON and the instrument will reset the slope and offset values for the CO response each time the AutoCal program runs.**

**This continuous readjustment of calibration parameters can often mask subtle fault conditions in the analyzer. It is recommended that, if CALIBRATE is enabled, the analyzer's test functions, slope and offset values be checked frequently to assure high quality and accurate data from the instrument.**

## 9.4.1. SETUP → ACAL: PROGRAMMING AND AUTO CAL SEQUENCE

**Note**

**If at any time an illegal entry is selected, (for example: Delta Days > 366) the ENTR label will disappear from the control button.**

To program the example sequence shown in Table 9-4, press:

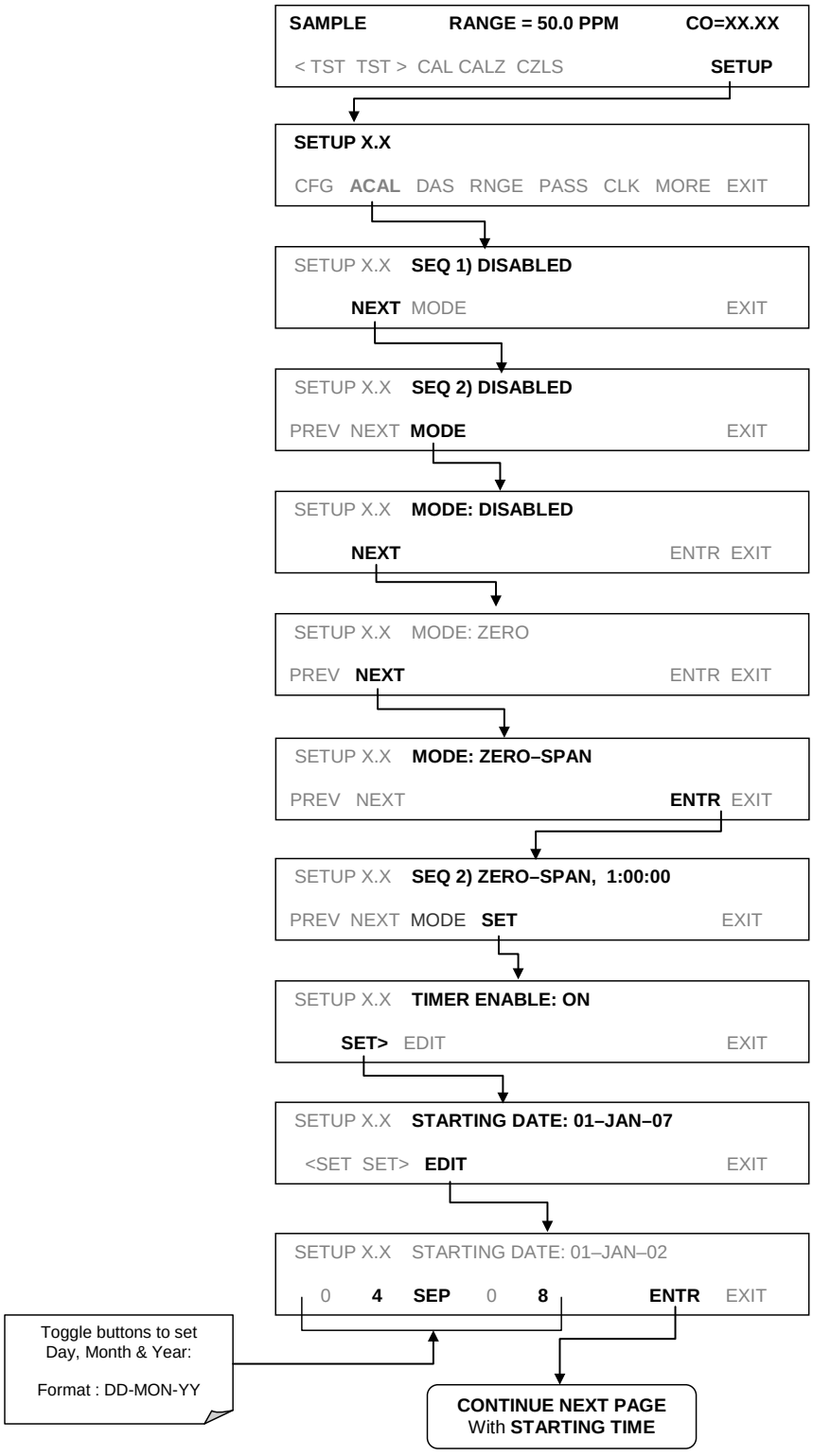

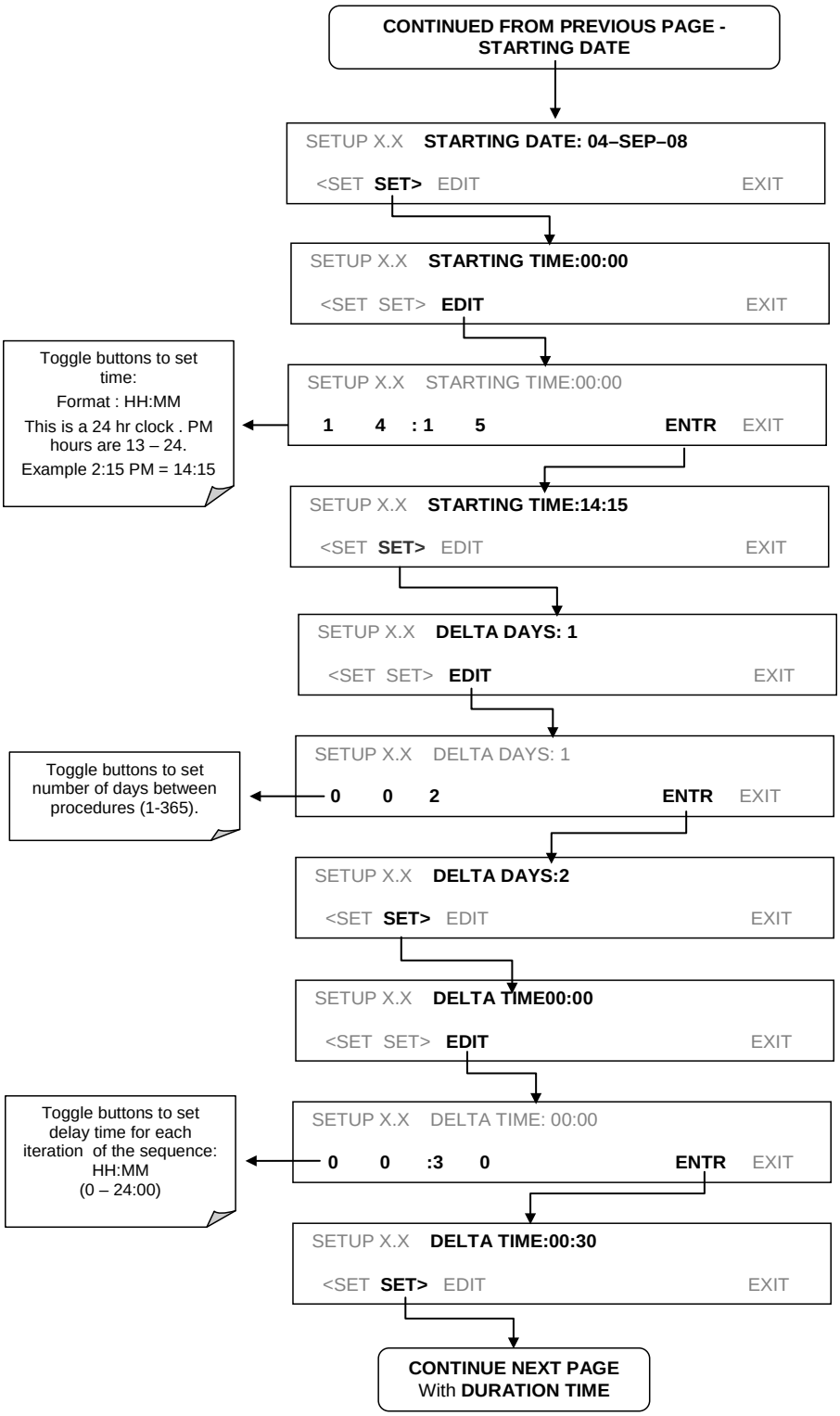
CONTINUED FROM PREVIOUS PAGE - STARTING DATE
SETUP X.X STARTING DATE: 04–SEP–08
<SET SET> EDIT EXIT
SETUP X.X STARTING TIME:00:00
<SET SET> EDIT EXIT
Toggle buttons to set time:
Format : HH:MM
This is a 24 hr clock . PM hours are 13 – 24.
Example 2:15 PM = 14:15
SETUP X.X STARTING TIME:00:00
1 4 : 1 5 ENTR EXIT
SETUP X.X STARTING TIME:14:15
<SET SET> EDIT EXIT
SETUP X.X DELTA DAYS: 1
<SET SET> EDIT EXIT
Toggle buttons to set number of days between procedures (1-365).
SETUP X.X DELTA DAYS: 1
0 0 2 ENTR EXIT
SETUP X.X DELTA DAYS:2
<SET SET> EDIT EXIT
SETUP X.X DELTA TIME00:00
<SET SET> EDIT EXIT
Toggle buttons to set delay time for each iteration of the sequence: HH:MM (0 – 24:00)
SETUP X.X DELTA TIME: 00:00
0 0 :3 0 ENTR EXIT
SETUP X.X DELTA TIME:00:30
<SET SET> EDIT EXIT
CONTINUE NEXT PAGE With DURATION TIME

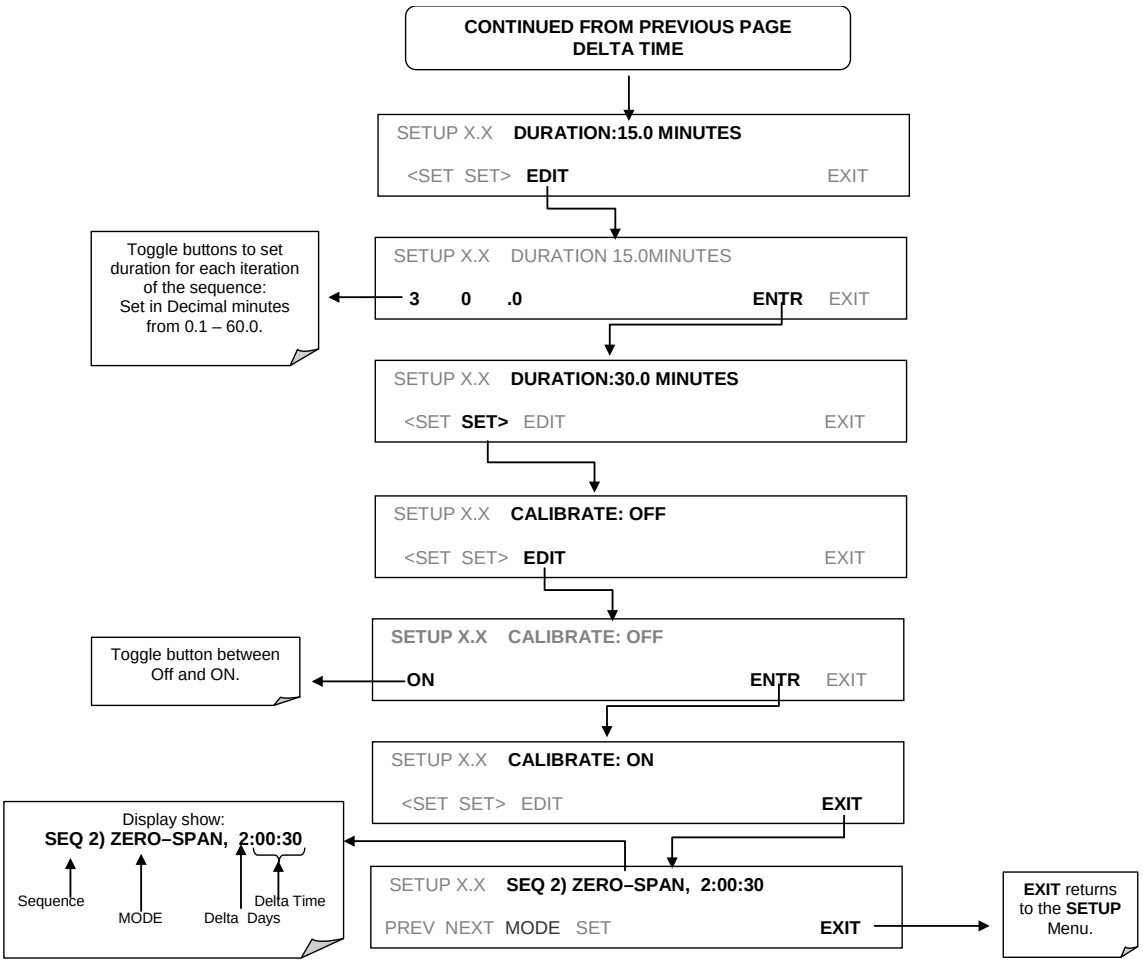


### 9.4.1.1. **AUTOCAL WITH AUTO OR DUAL REPORTING RANGES MODES SELECTED**

If the T300/T300M Analyzer is set for either the Dual or Auto reporting range modes, the following three steps will appear at the beginning of the AutoCal setup routine:

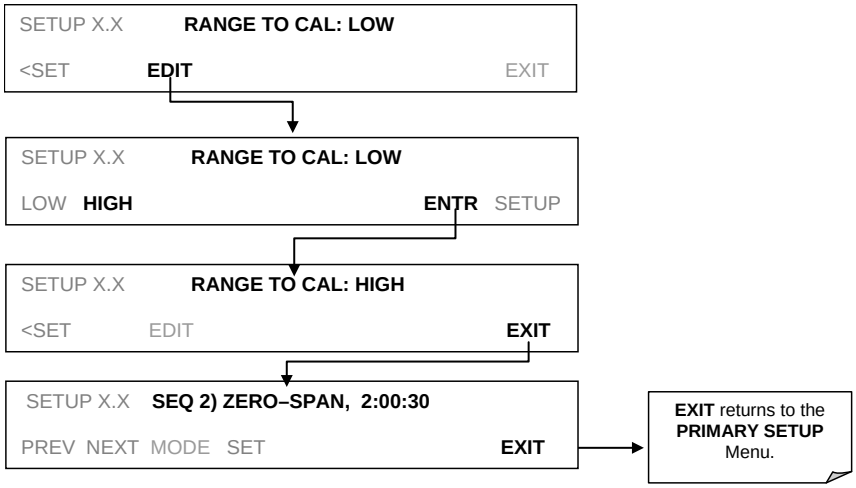


**Note**

**In order to automatically calibrate both the HIGH and LOW ranges, you must set up a separate sequence for each.**

# 9.5. CO CALIBRATION QUALITY

After completing one of the calibration procedures described above, it is important to evaluate the analyzer's calibration **SLOPE** and **OFFSET** parameters. These values describe the linear response curve of the analyzer. The values for these terms, both individually and relative to each other, indicate the quality of the calibration.

To perform this quality evaluation, you will need to record the values of both test functions (see Section 3.4.3 or Appendix A-3), all of which are automatically stored in the DAS channel CALDAT for data analysis, documentation and archival.

Make sure that these parameters are within the limits listed below and frequently compare them to those values on the *Final Test and Validation Data Sheet* that came attached to your manual, which should not be significantly different. If they are, refer to the troubleshooting Section 11.

**Table 9-5: Calibration Data Quality Evaluation**

| FUNCTION | MINIMUM VALUE | OPTIMUM VALUE | MAXIMUM VALUE |
|---|---|---|---|
| **SLOPE** | 0.700 | 1.000 | 1.300 |
| **OFFS** | -0.500 | 0.000 | 0.500 |
| These values should not be significantly different from the values recorded on the Teledyne API's *Final Test and Validation Data Sheet* that was shipped with your instrument.<br>If they are, refer to the troubleshooting Section 11. | | | |

The default DAS configuration records all calibration values in channel **CALDAT** as well as all calibration check (zero and span) values in its internal memory.

- Up to 200 data points are stored for up to 4 years of data (on weekly calibration checks) and a lifetime history of monthly calibrations.
- Review these data to see if the zero and span responses change over time.
- These channels also store the **STABIL** value (standard deviation of CO concentration) to evaluate if the analyzer response has properly leveled off during the calibration procedure.
- Finally, the **CALDAT** channel also stores the converter efficiency for review and documentation.

If your instrument has either an $O_2$ or $CO_2$ sensor option installed these should be calibrated as well.

# 9.6. CALIBRATION OF THE T300/T300M'S ELECTRONIC SUBSYSTEMS

## 9.6.1. DARK CALIBRATION TEST

The dark calibration test interrupts the signal path between the IR photo-detector and the remainder of the sync/demod board circuitry. This allows the instrument to compensate for any voltage levels inherent in the sync/demod circuitry that might effect the calculation of CO concentration.

Performing this calibration returns two offset voltages, one for **CO MEAS** and one for **CO REF** that are automatically added to the CPU's calculation routine. The two offset voltages from the last calibration procedure may be reviewed by the user via the front panel display. (See also Section 5.9.5).

To activate the dark calibration procedure or review the results of a previous calibration, press:

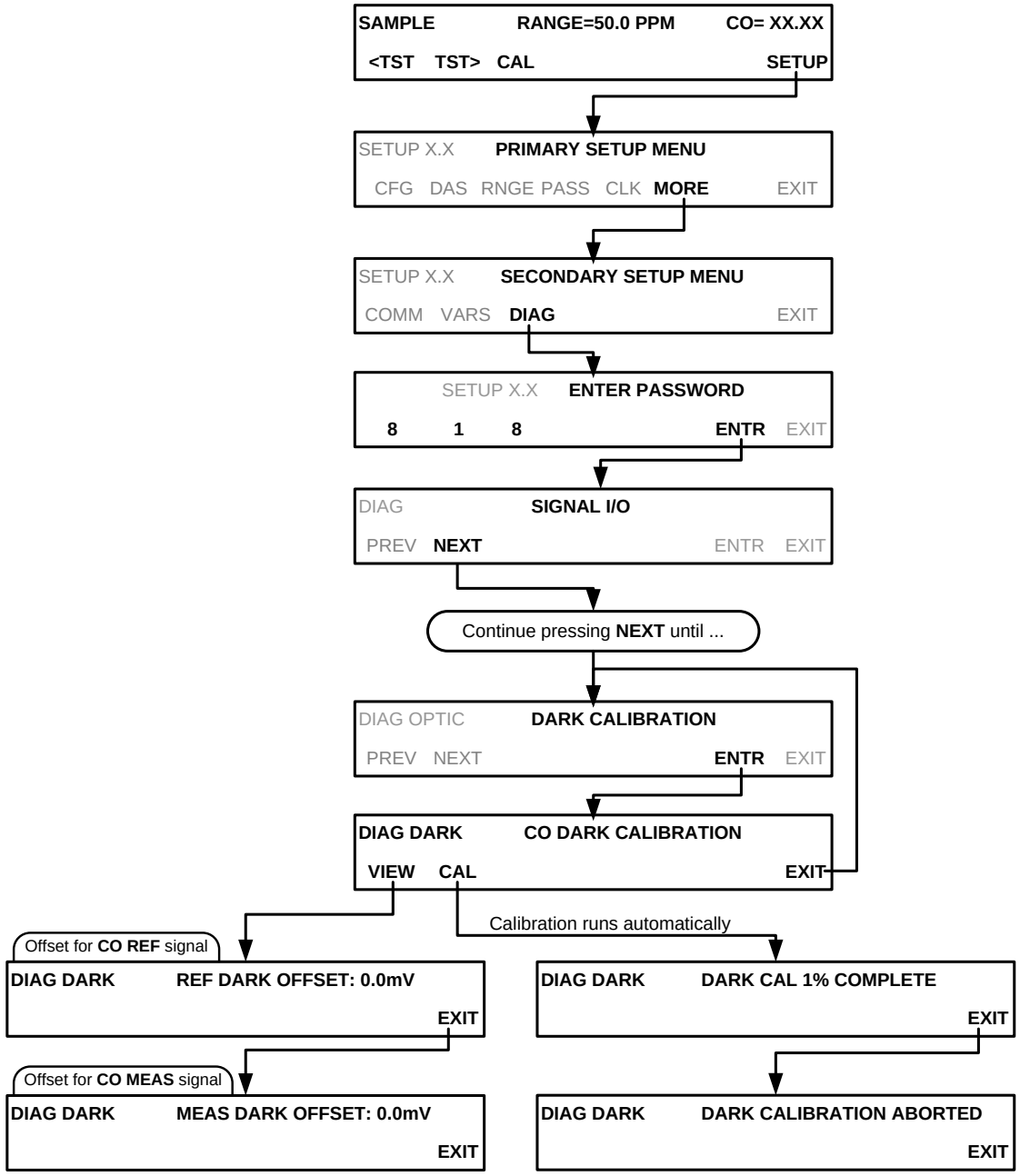


## 9.6.2. **PRESSURE CALIBRATION**

A sensor at the sample chamber outlet continuously measures the pressure of the sample gas. These data are used to compensate the final CO concentration calculation for changes in atmospheric pressure and is stored in the CPU's memory as the test function **PRES** (also viewable via the front panel). See also Section 5.9.6.

**IMPORTANT**

**IMPACT ON READINGS OR DATA**

**This calibration must be performed when the pressure of the sample gas is equal to ambient atmospheric pressure. Before performing the following pressure calibration procedure, disconnect the sample gas pump and sample gas-line vent from the rear panel sample gas inlet.**

To cause the analyzer to measure and record a value for **PRES**, press.

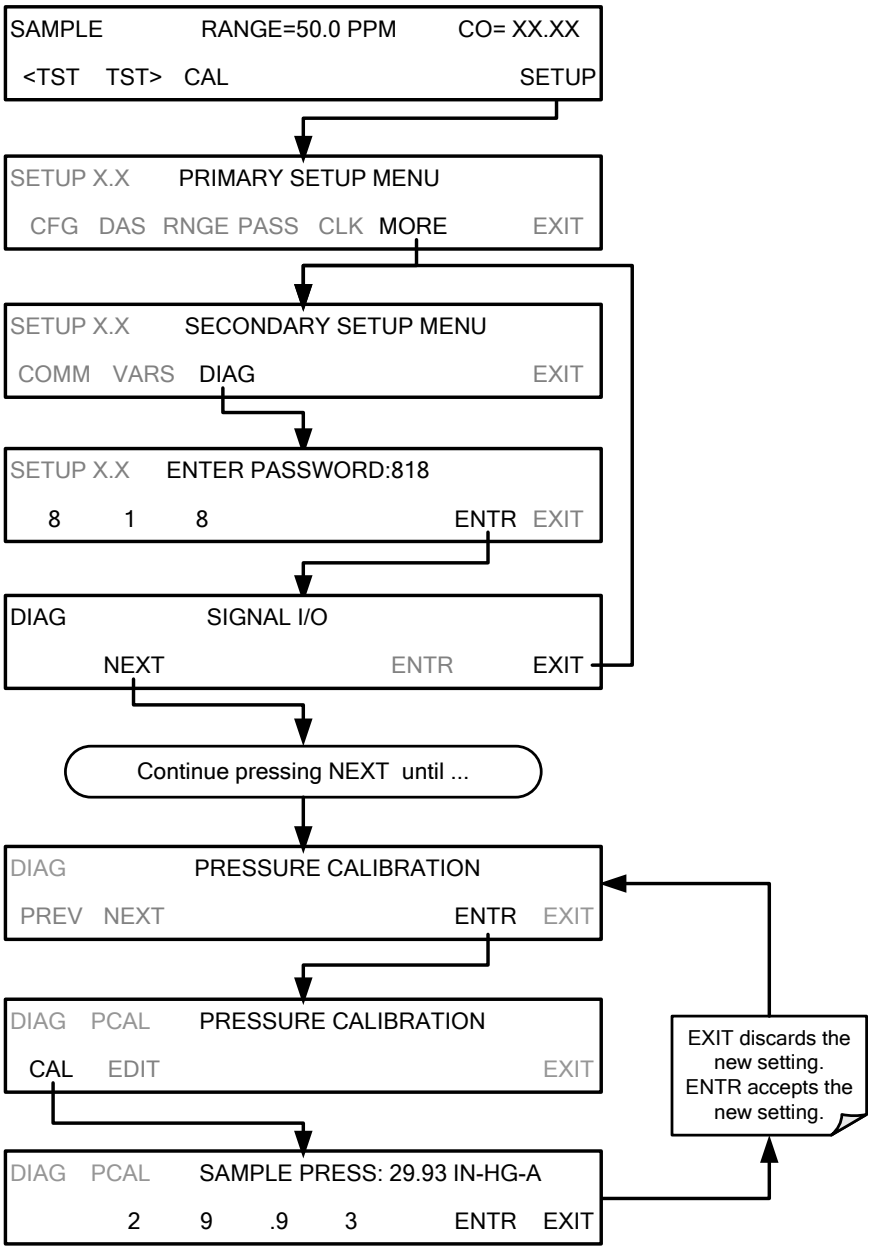

## 9.6.3. **FLOW CALIBRATION**

The flow calibration allows the user to adjust the values of the sample flow rates as they are displayed on the front panel and reported through COMM ports to match the actual flow rate measured at the sample inlet. This does not change the hardware measurement of the flow sensors, only the software-calculated values.

To carry out this adjustment, connect an external, sufficiently accurate flow meter to the sample inlet (see Section 11.3.4 for more details). Once the flow meter is attached and is measuring actual gas flow, press:

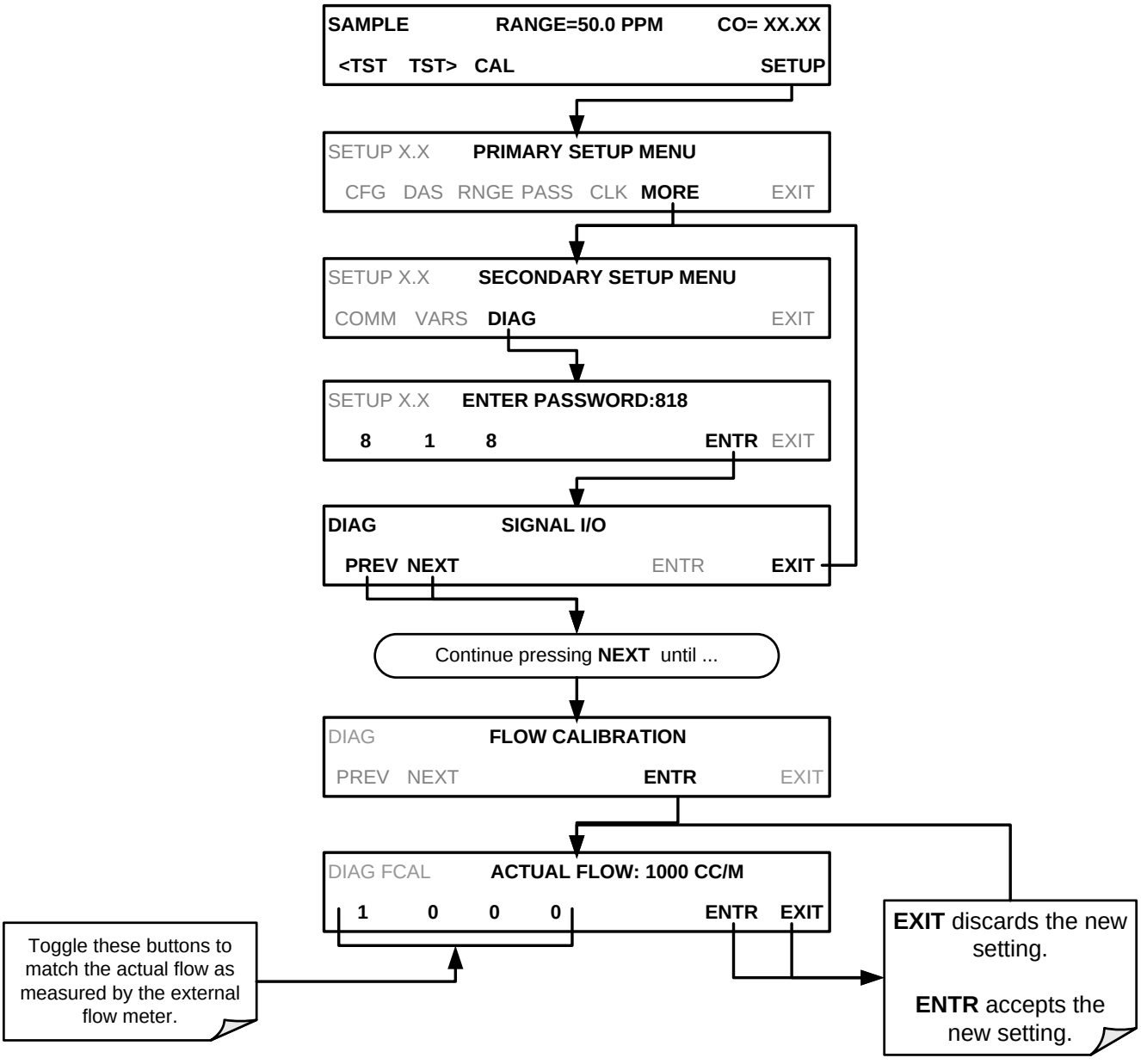


See also Section 5.9.7.

# 9.7. CALIBRATION OF OPTIONAL SENSORS

This section provides the calibration setup and procedures for the $O_2$ Sensor and the $CO_2$ Sensor options.

## 9.7.1. $O_2$ SENSOR CALIBRATION

Presented here are first the setup and then the calibration steps for the $O_2$ Sensor.

### 9.7.1.1. O2 PNEUMATICS CONNECTIONS

The pneumatic connections for calibrating are as follows:

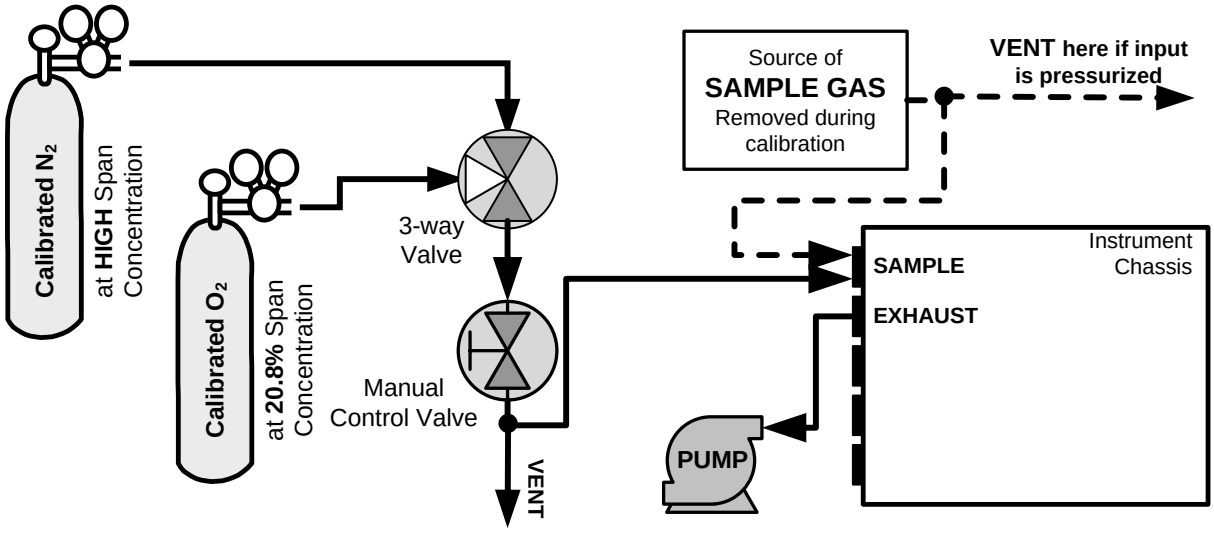


**Figure 9-7: $O_2$ Sensor Calibration Set Up**

$O_2$ **SENSOR ZERO GAS:** Teledyne API recommends using pure $N_2$ when calibration the zero point of your $O_2$ sensor option.

$O_2$ **SENSOR SPAN GAS:** Teledyne API recommends using 20.8% $O_2$ in $N_2$ when calibration the span point of your $O_2$ sensor option (See Table 3-12).

### 9.7.1.2. **SET O2 SPAN GAS CONCENTRATION**

Set the expected $O_2$ span gas concentration.

This should be equal to the percent concentration of the $O_2$ span gas of the selected reporting range (default factory setting = 20.8%; the approximate $O_2$ content of ambient air).

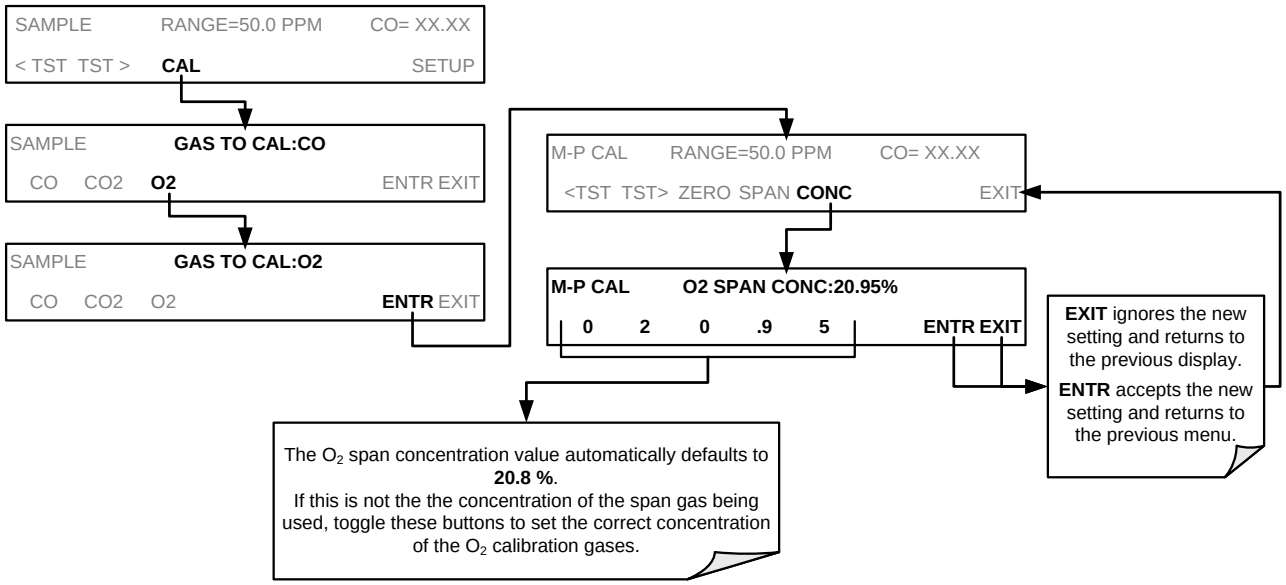

### 9.7.1.3. **ACTIVATE O2 SENSOR STABILITY FUNCTION**

To change the stability test function from CO concentration to the $O_2$ sensor output, press:

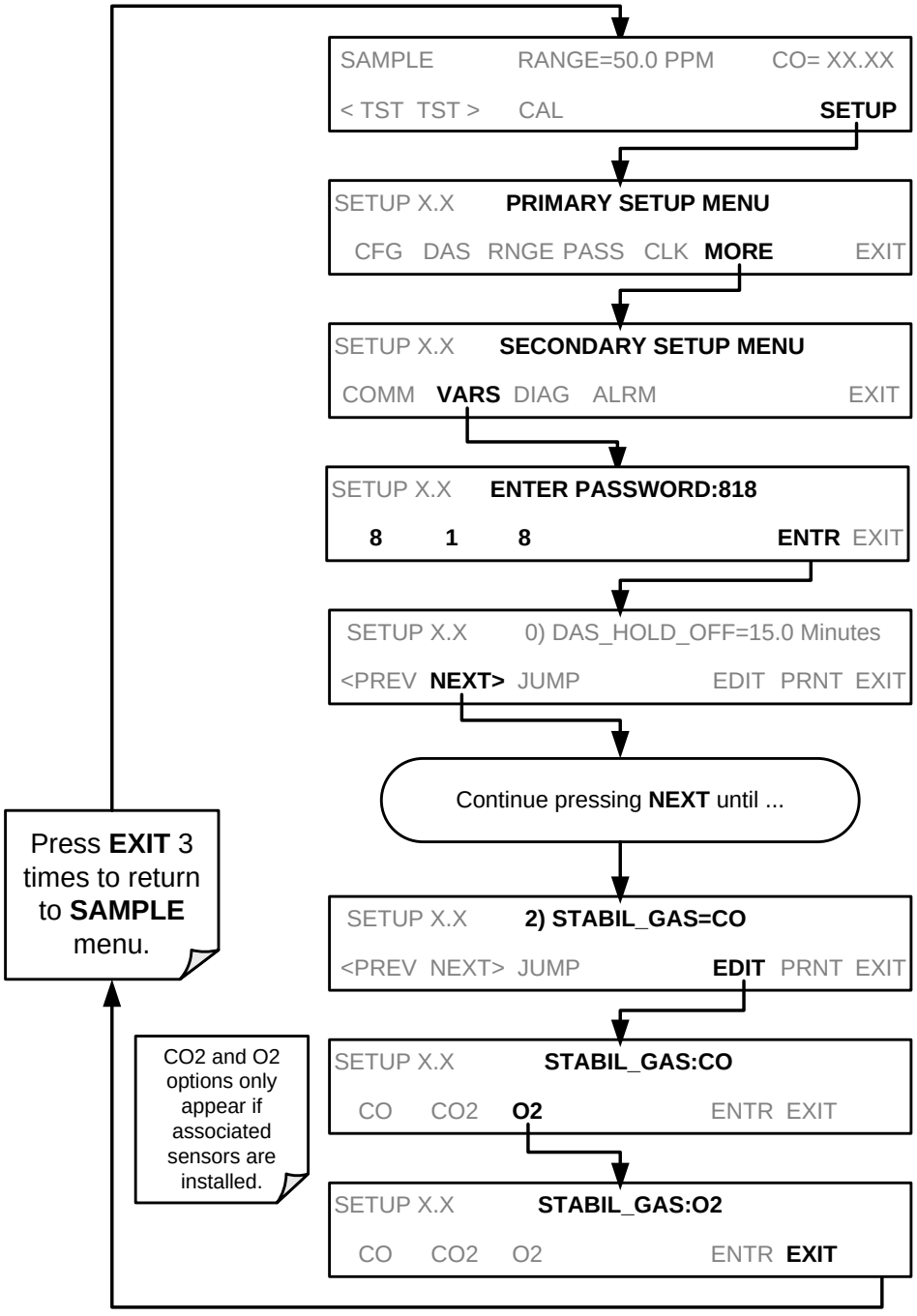


**Note** **Use the same procedure to reset the STB test function to CO when the O2 calibration procedure is complete.**

### 9.7.1.4. **O2 ZERO/SPAN CALIBRATION**

To perform the zero/span calibration procedure:

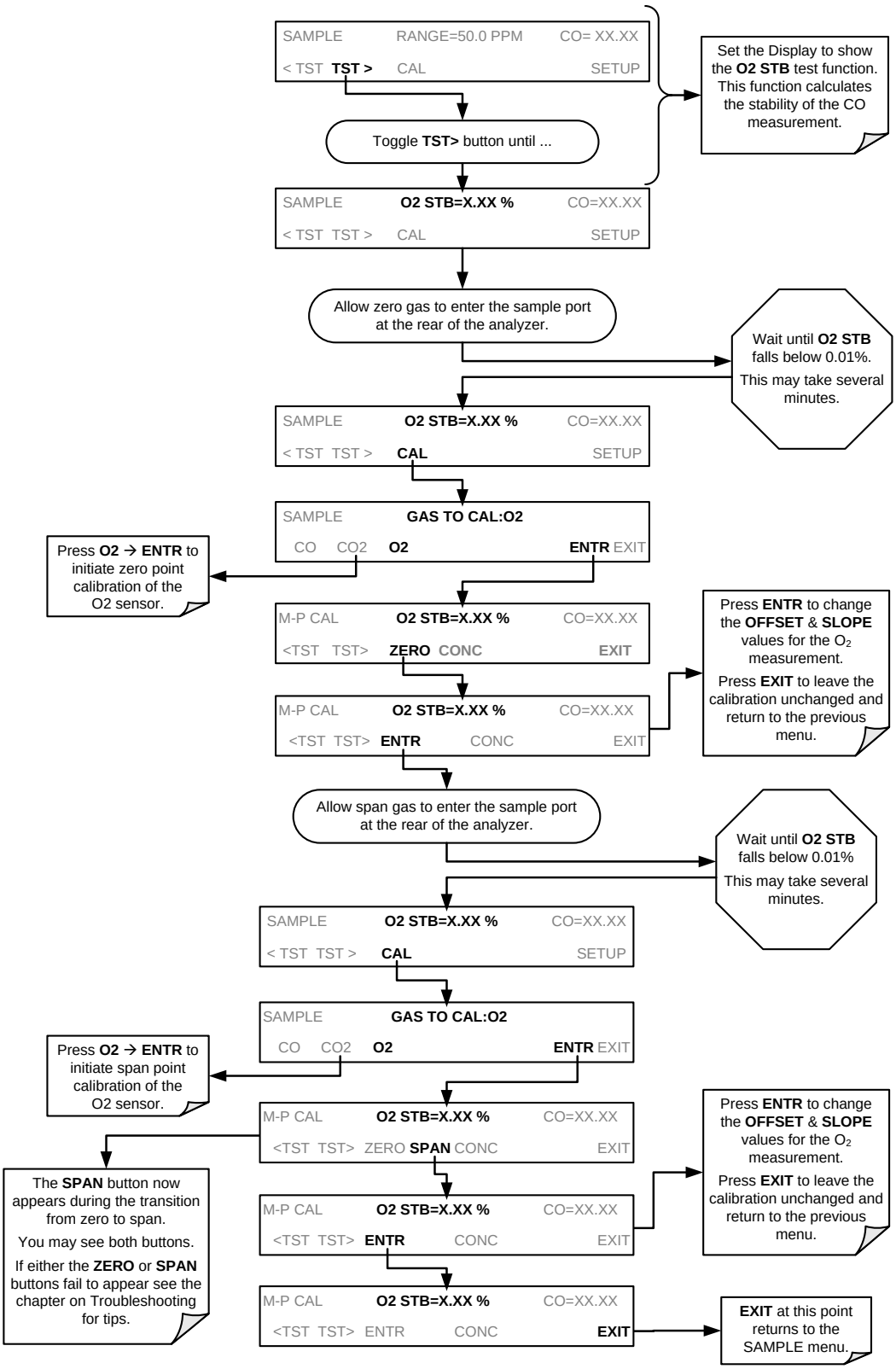

## 9.7.2. $CO_2$ SENSOR CALIBRATION PROCEDURE

Presented here are first the setup and then the calibration steps for the $CO_2$ Sensor.

### 9.7.2.1. CO2 PNEUMATICS CONNECTIONS

The pneumatic connections for calibrating are as follows

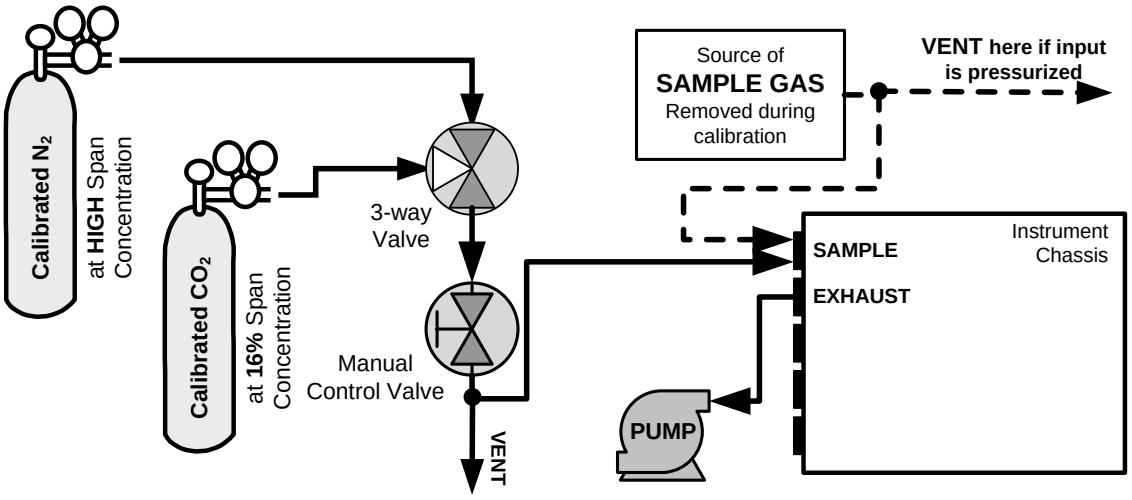


**Figure 9-8: $CO_2$ Sensor Calibration Set Up**

$CO_2$ **SENSOR ZERO GAS:** Teledyne API recommends using pure $N_2$ when calibration the zero point of your $CO_2$ sensor option.

$CO_2$ **SENSOR SPAN GAS:** Teledyne API recommends using 16% $CO_2$ in $N_2$ when calibration the span point of your $CO_2$ sensor option (Table 3-12) is 20%.

### 9.7.2.2. **SET CO2 SPAN GAS CONCENTRATION:**

Set the expected $CO_2$ span gas concentration.

This should be equal to the percent concentration of the $CO_2$ span gas of the selected reporting range (default factory setting = 12%).

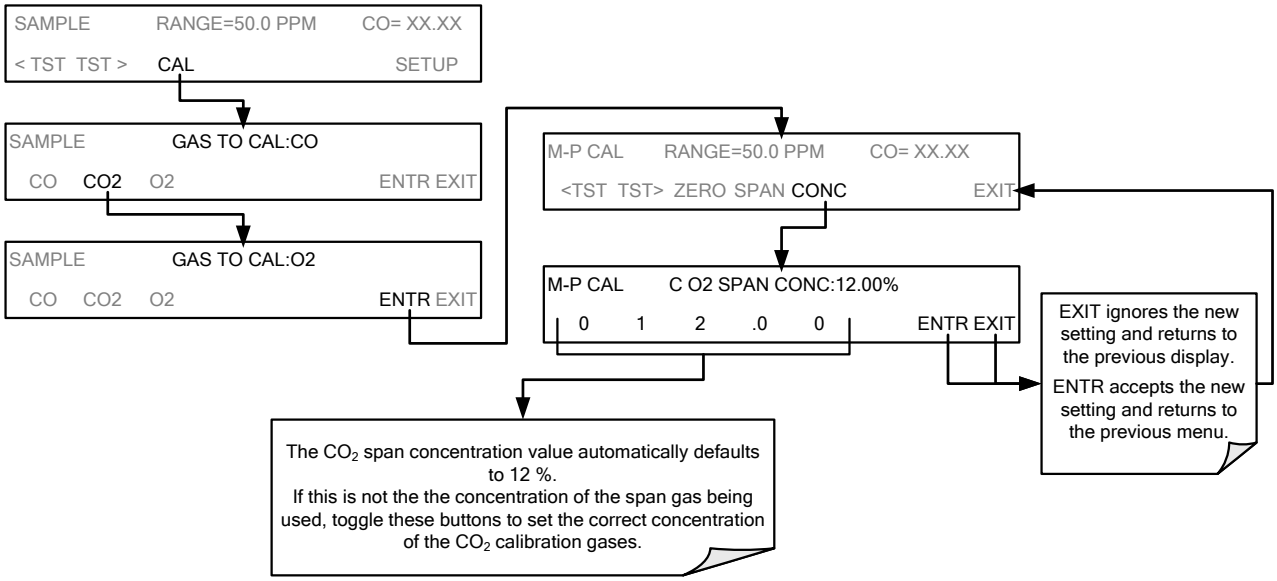

### 9.7.2.3. **ACTIVATE CO2 SENSOR STABILITY FUNCTION**

To change the stability test function from CO concentration to the $CO_2$ sensor output, press:

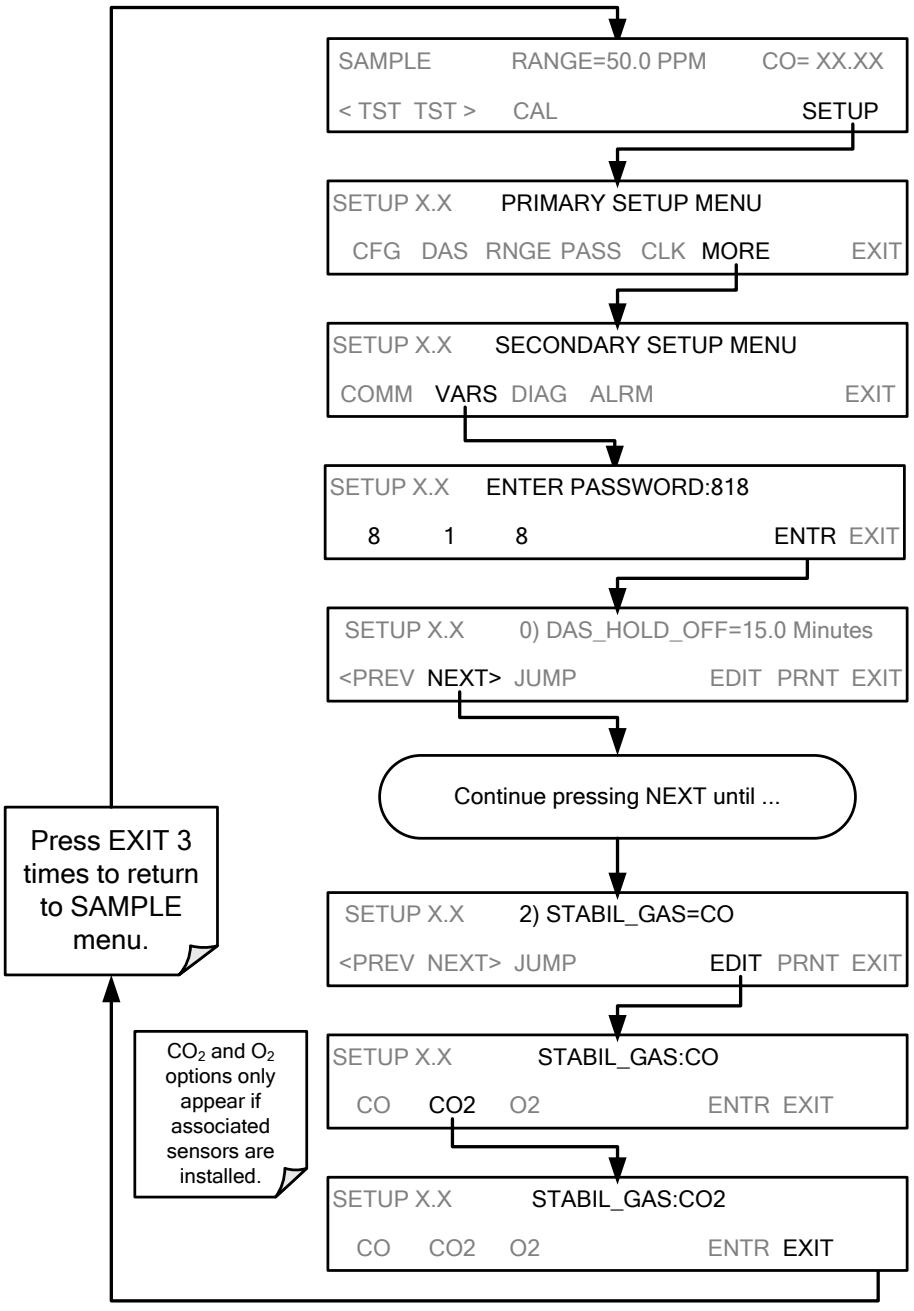


**Note** **Use the same procedure to reset the STB test function to CO when the CO2 calibration procedure is complete.**

## 9.7.2.4. **CO2 ZERO/SPAN CALIBRATION**

To perform the zero/span calibration procedure:

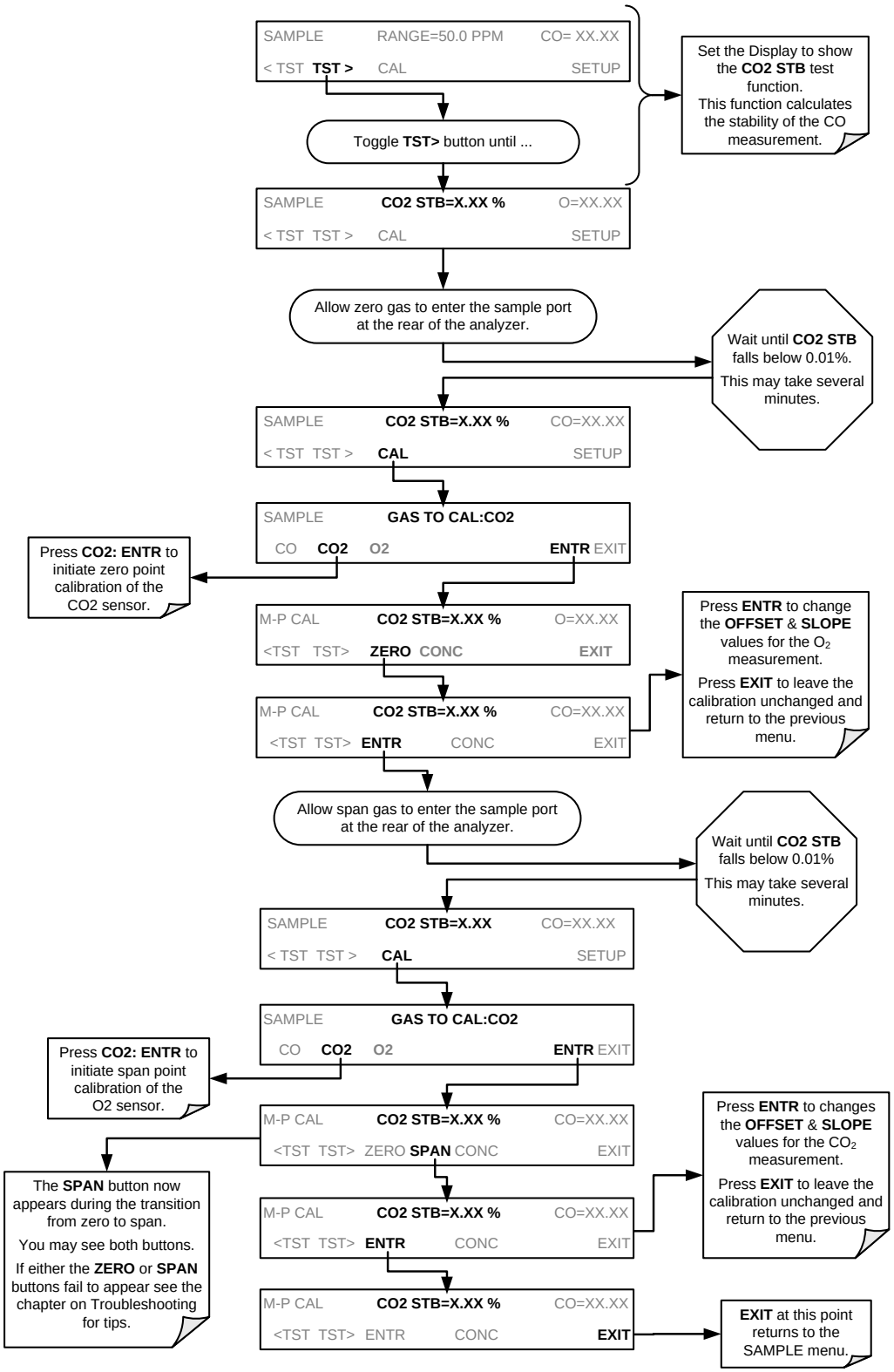

# 10. EPA CALIBRATION PROTOCOL

## 10.1. CALIBRATION REQUIREMENTS

If the T300 is to be used for EPA SLAMS monitoring, it must be calibrated in accordance with the instructions in this section.

The USEPA strongly recommends that you obtain a copy of the publication *Quality Assurance Handbook for Air Pollution Measurement Systems Volume 2: Part 1, Ambient* (abbreviated, *Q.A. Handbook Volume II*). This manual can be purchased from:

- USEPA Order Number: EPA454R98004; or NTIS Order Number: PB99 129876.
- National Technical Information Service (phone 800-553-6847) or Center for Environmental Research Information or the U.S. Government Printing Office at http://www.gpo.gov. The Handbook can also be located on line by searching for the title at http://www.epa.gov.
- Special attention should be paid to Section 2.6 of that which covers CO analyzers of this type. Specific regulations regarding the use and operation of ambient CO analyzers can be found in Reference 1 at the end of this Section.

A bibliography and references relating to CO monitoring are listed in Section 10.6.

### 10.1.1. CALIBRATION OF EQUIPMENT - GENERAL GUIDELINES

In general, calibration is the process of adjusting the gain and offset of the T300 against some recognized standard. In this section the term dynamic calibration is used to express a multipoint check against known standards and involves introducing gas samples of known concentration into the instrument in order to adjust the instrument to a predetermined sensitivity and to produce a calibration relationship.

This relationship is derived from the instrumental response to successive samples of different known concentrations. As a minimum, three reference points and a zero point are recommended to define this relationship.

All monitoring instrument systems are subject to some drift and variation in internal parameters and cannot be expected to maintain accurate calibration over long periods of time. Therefore, it is necessary to dynamically check the calibration relationship on a predetermined schedule. Zero and span checks must be used to document that the data remains within control limits. These checks are also used in data reduction and validation.

Calibration can be done by either diluting high concentration CO standards with zero air or using individual tanks of known concentration. Details of documentation, forms and procedures should be maintained with each analyzer and also in a central backup file as described in Section 2.6.2 of the Quality Assurance Handbook.

The reliability and usefulness of all data derived from any analyzer depends primarily upon its state of calibration. To ensure accurate measurements of the CO levels:

1. The analyzer must be calibrated at the time of installation and recalibrated as necessary.
2. In order to insure that high quality, accurate measurement information is obtained at all times, the analyzer must be calibrated prior to use.
3. Calibrations should be carried out at the field-monitoring site.
4. The analyzer should be in operation for at least several hours (preferably overnight) before calibration so that it is fully warmed up and its operation has stabilized.
5. If the instrument will be used on more than one range, it should be calibrated separately on each applicable range.
6. Calibration documentation should be maintained with each analyzer and also in a central backup file.
7. The true values of the calibration gases used must be traceable to NIST-SRMs See Table 3-12.

## 10.1.2. CALIBRATION EQUIPMENT, SUPPLIES, AND EXPENDABLES

The measurement of CO in ambient air requires a certain amount of basic sampling equipment and supplemental supplies. The Quality Assurance Handbook Section 2.6 contains information about setting up the appropriate systems.

### 10.1.2.1. DATA RECORDING DEVICE

Either a strip chart recorder, data acquisition system, digital data acquisition system should be used to record the data from the Mode; T300 RS-232 port or analog outputs. If analog readings are being used, the response of that system should be checked against a NIST referenced voltage source or meter. Data recording device should be capable of bi-polar operation so that negative readings can be recorded.

### 10.1.2.2. SPARE PARTS AND EXPENDABLE SUPPLIES

In addition to the basic equipment described in the Q.A. Handbook, it is necessary to maintain an inventory of spare parts and expendable supplies. Section 11 describes the parts that require periodic replacement and the frequency of replacement. Appendix B of this Technical Manual contains a list of spare parts and kits of expendables supplies.

**Table 10-1: Matrix for Calibration Equipment & Supplies**

| EQUIPMENT & SUPPLIES | SPECIFICATION | REFERENCE | ACTION IF REQUIREMENTS ARE NOT MET |
|---|---|---|---|
| Recorder | Compatible with output signal of analyzer; min. chart width of 150 mm (6 in) is recommended | | Return equipment to supplier |
| Sample line and manifold | Constructed of PTFE or glass | Check upon receipt | Return equipment to supplier |
| Calibration equipment | Q.A. Handbook[1] Vol II Part 1 , App 15, Sec. 4.4 & 5.4 | | Return equipment/ supplies to supplier or take corrective action |
| Detection limit | Noise = 0.5 ppm<br>Lower detectable limit=1.0 ppm | 40 CFR, Pt 53.20 & 23[2] | Instruments designated as reference or equivalent have been determined to meet these acceptance criteria. |
| Working standard CO cylinder gas | Traceable to NIST-SRM | Analyzed against NIST-SRM; 40 CFR, Pt 50, App C; para. 3.1[3] | Obtain new working standard and check for traceability |
| Zero air | Clean dry ambient air, free of contaminants that cause detectable response with the CO analyzer. | 40 CFR, Pt 50, App C; para. 3.2[3] | Obtain air from another source or regenerate. |
| Record form | Q.A. Handbook[1] Vol II Part 1 , App 15, Table A-5 & A-6 | | Revise forms as appropriate |
| Audit equipment | Must not be the same as used for calibration | Q.A. Handbook[1] Vol II Part 1 , App 15, Sec. 4.4 & 5.4 | Locate problem and correct or return to supplier |

## 10.1.3. RECOMMENDED STANDARDS FOR ESTABLISHING TRACEABILITY

To assure data of desired quality, two considerations are essential:

- The measurement process must be in statistical control at the time of the measurement.
- The systematic errors, when combined with the random variation in the measurement process, must result in a suitably small uncertainty.

Evidence of good quality data includes documentation of the quality control checks and the independent audits of the measurement process by recording data on specific forms or on a quality control chart and by using materials, instruments, and measurement procedures that can be traced to appropriate standards of reference.

To establish traceability, data must be obtained routinely by repeat measurements of standard reference samples (primary, secondary and/or working standards). More specifically, working calibration standards must be traceable to standards of higher accuracy, such as those listed in Table 3-12.

Cylinders of working gas traceable to NIST-SRMs (called EPA Protocol Calibration Gas) are also commercially available (from sources such as Scott Specialty Gases, etc.). See Table 3-12 for a list of appropriate SRMs.

## 10.1.4. CALIBRATION FREQUENCY

To ensure accurate measurements of the CO concentrations, calibrate the analyzer at the time of installation, and recalibrate it:

- No later than three months after the most recent calibration or performance audit which indicate the analyzer's calibration to be acceptable.
- When there is an interruption of more than a few days in analyzer operation.
- When any repairs have taken place which might affect its calibration.
- After a physical relocation of the analyzer.
- When any other indication (including excessive zero or span drift) of possible significant inaccuracy of the analyzer exists.

Following any of the activities listed above, the zero and span should be checked to determine if a calibration is necessary.

**Table 10-2: Activity Matrix for Quality Assurance Checks**

| Characteristic | Acceptance limits | Frequency and method of measurement | Action if requirements are not met |
|---|---|---|---|
| Shelter temperature | Mean temperature between 22°C and 28°C (72° and 82°F), daily fluctuations not greater than ±2°C | Check thermograph chart weekly for variations greater than ±2°C (4°F) | Mark strip chart for the affected time period<br>Repair or adjust temperature control |
| Sample introduction system | No moisture, foreign material, leaks, obstructions; sample line connected to manifold | Weekly visual inspection | Clean, repair, or replace as needed |
| Recorder | Adequate ink & paper<br>Legible ink traces<br>Correct chart speed and range<br>Correct time | Weekly visual inspection | Replenish ink and paper supply<br>Adjust time to agree with clock; note on chart |
| Analyzer operational settings | **TEST** measurements at nominal values<br>2. T300 in Sample Mode | Weekly visual inspection | Adjust or repair as needed |
| Analyzer operational check | Zero and span within tolerance limits as described in Subsection 9.1.3 of Sec. 2.0.9 (Q.A. Handbook Vol II[4]) | Level 1 zero/span every 2 weeks; Level 2 between Level 1 checks at frequency desired analyzer by user | Find source of error and repair<br>After corrective action, re-calibrate analyzer |
| Precision check | Assess precision as described in Sec. 2.0.8 and Subsection 3.4.3 (Ibid.) | Every 2 weeks, Subsection 3.4.3 (Ibid.) | Calc, report precision, Sec. 2.0.8 (Ibid.) |

.

## 10.1.5. LEVEL 1 CALIBRATIONS VERSUS LEVEL 2 CHECKS

Essential to quality assurance are scheduled checks for verifying the operational status of the monitoring system. The operator should visit the site at least once each week. It is recommended Level 1 zero and span check conducted on the analyzer every two weeks. Level 2 zero and span checks should be conducted at a frequency desired by the user. Definitions of these terms are given in Table 10-3.

To provide for documentation and accountability of activities, a checklist should be compiled and then filled out by the field operator as each activity is completed.

**Table 10-3: Definition of Level 1 and Level 2 Zero and Span Checks**

**(Q.A. Handbook[1] Vol II, Part1, Section 12.3 & 12.4)**

| LEVEL 1 ZERO AND SPAN CALIBRATION | LEVEL 2 ZERO AND SPAN CHECK |
|---|---|
| A Level 1 zero and span calibration is a simplified, two-point analyzer calibration used when analyzer linearity does not need to be checked or verified. (Sometimes when no adjustments are made to the analyzer, the Level 1 calibration may be called a zero/span check, in which case it must not be confused with a Level 2 zero/span check.) Since most analyzers have a reliably linear or near-linear output response with concentration, they can be adequately calibrated with only two concentration standards (two-point concentration). Furthermore, one of the standards may be zero concentration, which is relatively easily obtained and need not be certified. Hence, only one certified concentration standard is needed for the two-point (Level 1) zero and span calibration. Although lacking the advantages of the multipoint calibration, the two-point zero and span calibration--because of its simplicity--can be (and should be) carried out much more frequently. Also, two-point calibrations are easily automated. Frequency checks or updating of the calibration relationship with a two-point zero and span calibration improves the quality of the monitoring data by helping to keep the calibration relationship more closely matched to any changes (drifts) in the analyzer response. | A Level 2 zero and span check is an "unofficial" check of an analyzer's response. It may include dynamic checks made with uncertified test concentrations, artificial stimulation of the analyzer's detector, electronic or other types of checks of a portion of the analyzer, etc.<br><br>Level 2 zero and span checks are not to be used as a basis for analyzer zero or span adjustments, calibration updates, or adjustment of ambient data. They are intended as quick, convenient checks to be used between zero and span calibrations to check for possible analyzer malfunction or calibration drift. Whenever a Level 2 zero or span check indicates a possible calibration problem, a Level 1 zero and span (or multipoint) calibration should be carried out before any corrective action is taken.<br><br>If a Level 2 zero and span check is to be used in the quality control program, a "reference response" for the check should be obtained immediately following a zero and span (or multipoint) calibration while the analyzer's calibration is accurately known. Subsequent Level 2 check responses should then be compared to the most recent reference response to determine if a change in response has occurred. For automatic Level 2 zero and span checks, the first scheduled check following the calibration should be used for the reference response. It should be kept in mind that any Level 2 check that involves only part of the analyzer's system cannot provide information about the portions of the system not checked and therefore cannot be used as a verification of the overall analyzer calibration. |

# 10.2. ZERO AND SPAN CHECKS

A system of Level 1 and Level 2 zero span checks is recommended. These checks must be conducted in accordance with the specific guidance given in Section 12 of the QA Handbook Vol II Part 1[1]. It is recommended that Level 1 zero and span checks be conducted every two weeks. Level 2 checks should be conducted in between the Level 1 checks at a frequency desired by the user. Span concentrations for both levels should be between 70 and 90% of the measurement range.

Zero and span data are to be used to:

1. Provide data to allow analyzer adjustment for zero and span drift;
2. Provide a decision point on when to calibrate the analyzer;
3. Provide a decision point on invalidation of monitoring data.

Items 1 and 2 are described in detail in Subsection 9.1.3 of Section 2.0.9 (Q.A. Handbook Vol II[4]). Item 3 is described in Subsection 9.1.4 of the same section.

Refer to the Troubleshooting and Repair (see Section 13) of this manual if the instrument is not within the allowed variations.

## 10.2.1. ZERO/SPAN CHECK PROCEDURES

The Zero and Span calibration can be checked in a variety of different ways. They include:

- Manual Zero/Span Check - Zero and Span can be checked from the front panel touchscreen. The procedure is in Section 9.3 of this manual.
- Automatic Zero/Span Checks - After the appropriate setup, Z/S checks can be performed automatically every night. See Section 9.3 of this manual for setup and operation procedures.

  If using the AutoCal feature to perform a calibration check, set the **CALIBRATE** parameter to **NO**.
- Zero/Span checks via remote contact closure = Zero/Span checks can be initiated via remote contact closures on the rear panel. See Section 9.3.3.3 of this manual.
- Zero/Span via RS-232 port - Z/S checks can be controlled via the RS-232 port. See Section 9.3.3.3 and Appendix A-6 of this manual for more details.

## 10.2.2. PRECISION CHECK

A periodic check is used to assess the data for precision. A one-point precision check must be carried out at least once every 2 weeks on each analyzer at a CO concentration between 8.0 ppm and 10.0 ppm.

The analyzer must be operated in its normal sampling mode, and the precision test gas must pass through all filters, scrubbers, conditioners, and other components used during normal ambient sampling.

The standards from which precision check test concentrations are obtained must be traceable to NIST-SRM. Those standards used for calibration or auditing may be used.

To perform a precision check during the instrument set up, the sources of zero air and sample gas and procedures should conform to those described in Section 9.2 for analyzers with no valve options or with an IZS valve option installed and Section 9.3.1 for analyzers with Z/S options installed with the following exception:

- Connect the analyzer to a precision gas that has a CO concentration between 8.0 ppm and 10.0 ppm. If a precision check is made in conjunction with a zero/span check, it must be made prior to any zero or span adjustments.
- Record this value.

Information from the check procedure is used to assess the precision of the monitoring data; see CFR 40 CFR 58[5] for procedures for calculating and reporting precision.

# 10.3. PRECISIONS CALIBRATION

Calibration must be performed with a calibrator that meets all conditions specified in QA Handbook[1] Vol II Part 1, App 15, Sec. 4.4 & 5.4. The user should be sure that all flow meters are calibrated under the conditions of use against a reliable standard. All volumetric flow rates should be corrected to 25°C (77°F) and 760 mm-Hg (29.92in–Hg). Make sure the calibration system can supply the range of the concentration at a sufficient flow over the whole range of concentration that will be encountered during calibration.

All operational adjustments to the T300 should be completed prior to the calibration. The following software features must be set into the desired state before calibration.

- If the instrument will be used for more than one range, it should be calibrated separately on each applicable range.
- Automatic temperature/pressure compensation should be enabled. See Section 5.7.
- Alternate units, make sure ppm units are selected for EPA monitoring. See Section 5.4.4.

The analyzer should be calibrated on the same range used for monitoring.

## 10.3.1. PRECISION CALIBRATION PROCEDURES

To perform a precision calibration during the instrument set up, the input sources of zero air and sample gas and procedures should conform to those described in Section 9.2 for analyzers with no valve options or with an IZS valve option installed and Section 9.3 for analyzers with Z/S options installed.

# 10.4. AUDITING PROCEDURE

An audit is an independent assessment of the accuracy of data. Independence is achieved by having the audit made by an operator other than the one conducting the routine field measurements and by using audit standards and equipment different from those routinely used in monitoring. The audit should be a true assessment of the measurement process under normal operations without any special preparation or adjustment of the system. Routine quality control checks conducted by the operator are necessary for obtaining and reporting good quality data, but they are not considered part of the auditing procedure. Audits are recommended once per quarter, but frequency may be determined by applicable regulations and end use of the data.

Refer to The Q.A. Handbook[1] Volume II, Part 1 Section 16 (for a more detailed description).

## 10.4.1. CALIBRATION AUDIT

A calibration audit consists of challenging the T300/T300M with known concentrations of CO. The difference between the known concentration and the analyzer response is obtained, and an estimate of the analyzer's accuracy is determined.

The recommended audit schedule depends on the purpose for which the monitoring data are being collected. For example, Appendix A, 40 CFR 58[5] requires that each analyzer in State and Local Air Monitoring Network Plan (SLAMS) be audited at least once a

year. Each agency must audit 25% of the reference or equivalent analyzers each quarter. If an agency operates less than four reference or equivalent analyzers, it must randomly select analyzers for reauditing so that one analyzer will be audited each calendar quarter and each analyzer will be audited at least once a year.

Appendix B, 40 CFR 58[5] requires that each Prevention of Significant Deterioration (PSD) reference or equivalent analyzer be audited at least once a sampling quarter. Results of these audits are used to estimate the accuracy of ambient air data.

### 10.4.2. DATA REDUCTION AUDIT

A data reduction audit involves transcribing analyzer data and determining if the collected data is within the control limits, generally ±2 ppm between the analyzer response and the audit value. The resulting values are recorded on the SAROAD form. If data exceeds ±2 ppm, check all of the remaining data in the 2-week period.

### 10.4.3. SYSTEM AUDIT/VALIDATION

A system audit is an on-site inspection and review of the quality assurance activities used for the total measurement system (sample collection, sample analysis, data processing, etc.); it is an appraisal of system quality.

Conduct a system audit at the startup of a new monitoring system and periodically (as appropriate) as significant changes in system operations occur.

## 10.5. DYNAMIC MULTIPOINT CALIBRATION PROCEDURE

### 10.5.1. LINEARITY TEST

In order to record the instrument's performance at a predetermined sensitivity and to derive a calibration relationship, a minimum of three reference points and one zero point uniformly spaced covering 0 to 90 percent of the operating range are recommended to define this relationship.

The analyzer's recorded response is compared with the known concentration to derive the calibration relationship.

To perform a precision check during the instrument set up, the sources of zero air and sample gas should conform to those described in Section 9.1.1.3.

Follow the procedures described in Section 9.3 for calibrating the zero points.

For each mid point:

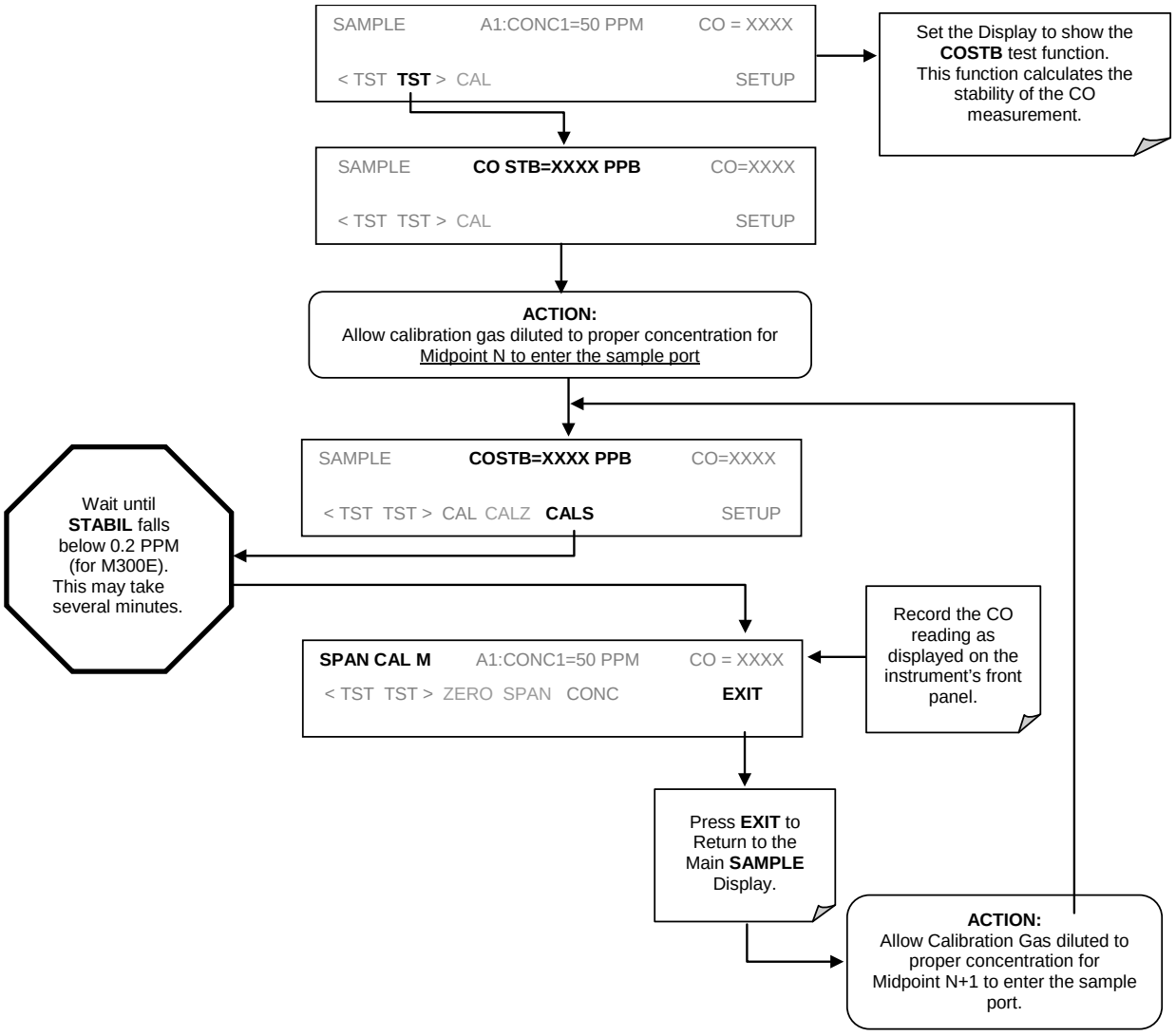


Plot the analyzer responses versus the corresponding calculated concentrations to obtain a calibration relationship. Determine the best-fit straight line ($y = mx + b$) determined by the method of least squares.

After the best-fit line has been drawn, determine whether the analyzer response is linear. To be considered linear, no calibration point should differ from the best-fit line by more than ±2% of full scale.

If carried out carefully, the checks described in this section will provide reasonable confidence that the T300 is operating properly. Checks should be carried out at least every 3 months as the possibility of malfunction is always present.

If the linearity error is excessive and cannot be attributed to outside causes, check the T300 system for:

- Sample pressure higher than ambient – pressurized sample gas
- Leaks
- Correct flow
- Miscalibrated span gas tanks or bad zero gas
- Miscalibrated sample pressure transducer
- Failed IR detector, GFC Wheel or Sync/Demod Board
- Contaminated optical bench or sample lines

# 10.6. REFERENCES

[1] Quality Assurance Handbook for Air Pollution Measurement Systems Volume II: Part 1 - Ambient Air Quality Monitoring Program Quality System Development - EPA-454/R-98-004 - August 1998. United States Environmental Protection Agency - Office of Air Quality Planning and Standards

[2] CFR Title 40: Protection of Environment - PART 53—AMBIENT AIR MONITORING REFERENCE AND EQUIVALENT METHODS:
- 53.20 General provisions.
- 53.23 Test procedures.

[3] CFR Title 40: Protection of Environment - PART 50—NATIONAL PRIMARY AND SECONDARY AMBIENT AIR QUALITY STANDARDS: Appendix C to Part 50—Measurement Principle and Calibration Procedure for the Measurement of Carbon Monoxide in the Atmosphere (Non-Dispersive Infrared Photometry)

[4] Quality Assurance Handbook for Air Pollution Measurement Systems - Volume II, Ambient Air Specific Methods, EPA-600/4-77-027a, 1977.

[5] CFR Title 40: Protection of Environment - AMBIENT AIR QUALITY SURVEILLANCE

# PART III

# TECHNICAL INFORMATION

# 11. MAINTENANCE SCHEDULE & PROCEDURES

Predictive diagnostic functions, including data acquisition records, failure warnings and test functions built into the analyzer, allow the user to determine when repairs are necessary without performing painstaking preventative maintenance procedures. There are, however, a minimal number of simple procedures that when performed regularly will ensure that the analyzer continues to operate accurately and reliably over its lifetime. Repairs and troubleshooting are covered in Section 12 of this manual.

## 11.1. MAINTENANCE SCHEDULE

Table 11-1 shows a typical maintenance schedule for the analyzer. Please note that in certain environments (i.e. dusty, very high ambient pollutant levels) some maintenance procedures may need to be performed more often than shown.

**Note**

**A Span and Zero Calibration Check (see CAL CHECK REQ'D Column of Table 10 1) must be performed following certain of the maintenance procedure listed below.**

**See Sections 8.3 and 8.4 for instructions on performing checks.**

**CAUTION**

**GENERAL SAFETY HAZARD**

**Risk of electrical shock. Disconnect power before performing any of the following operations that require entry into the interior of the analyzer.**

**CAUTION**

**QUALIFIED PERSONNEL**

**The operations outlined in this section are to be performed by qualified maintenance personnel only.**

This page intentionally left blank.

**Table 11-1: T300/T300M Maintenance Schedule**

| ITEM | ACTION | FREQ | CAL CHECK REQ'D | MANUAL | DATE PERFORMED | | | | | | | | | |
|---|---|---|---|---|---|---|---|---|---|---|---|---|---|---|
| | | | | | | | | | | | | | | |
| Particulate Filter | Replace | Weekly or As Needed | No | | | | | | | | | | | |
| Verify Test Functions | Record and Analyze | Weekly or after any Maintenance or Repair | No | | | | | | | | | | | |
| Pump Diaphragm | Replace | Annually | Yes | | | | | | | | | | | |
| Perform Flow Check | Check Flow | Annually | No | | | | | | | | | | | |
| Perform Leak Check | Verify Leak Tight | Annually or after any Maintenance or Repair | No | | | | | | | | | | | |
| Pneumatic lines | Examine and Clean | As Needed | Yes if cleaned | | | | | | | | | | | |
| Cleaning | Clean | As Needed | Only if cover removed | | | | | | | | | | | |

**Table 11-2: T300/T300M Test Function Record**

| FUNCTION | OPERATING MODE* | DATE RECORDED | | | | | | | | | | | |
|---|---|---|---|---|---|---|---|---|---|---|---|---|---|
| | | | | | | | | | | | | | |
| STABILITY | ZERO CAL | | | | | | | | | | | | |
| CO MEAS | ZERO CAL | | | | | | | | | | | | |
| MR RATIO | ZERO CAL | | | | | | | | | | | | |
| | SPAN CAL | | | | | | | | | | | | |
| PRES | SAMPLE | | | | | | | | | | | | |
| PHT DRIVE | SAMPLE AFTER WARM-UP | | | | | | | | | | | | |
| SLOPE | SPAN CAL | | | | | | | | | | | | |
| OFFSET | ZERO CAL | | | | | | | | | | | | |
| | | | | | | | | | | | | | |

# 11.2. PREDICTING FAILURES USING THE TEST FUNCTIONS

The Test Functions can be used to predict failures by looking at how their values change over time. Initially it may be useful to compare the state of these Test Functions to the values recorded on the printed record of the final calibration performed on your instrument at the factory, P/N 04307. Table 11-3 can be used as a basis for taking action as these values change with time. The internal data acquisition system (DAS) is a convenient way to record and track these changes. Use APICOM to download and review this data from a remote location.

**Table 11-3: Predictive uses for Test Functions**

| FUNCTION | CONDITION | BEHAVIOR | INTERPRETATION |
|---|---|---|---|
| **STABILITY** | Zero Cal | Increasing | • Pneumatic Leaks – instrument & sample system<br>• Detector deteriorating |
| **CO MEAS** | Zero Cal | Decreasing | • Source Aging<br>• Detector deteriorating<br>• Optics getting dirty or contaminated |
| **MR RATIO** | Zero Cal | Increasing | • Source Aging<br>• Detector deteriorating<br>• Contaminated zero gas ($H_2O$) |
| | | Decreasing | • Source Aging<br>• Detector deteriorating<br>• GFC Wheel Leaking<br>• Pneumatic Leaks<br>• Contaminated zero gas (CO) |
| | Span Cal | Increasing | • Source Aging<br>• Pneumatic Leaks – instrument & sample system<br>• Calibration system deteriorating<br>• GFC Wheel Leaking |
| | | Decreasing | • Source Aging<br>• Calibration system deteriorating |
| **PRES** | Sample | Increasing > 1” | • Pneumatic Leak between sample inlet and Sample Cell<br>• Change in sampling manifold |
| | | Decreasing > 1” | • Dirty particulate filter<br>• Pneumatic obstruction between sample inlet and Sample Cell<br>• Obstruction in sampling manifold |
| **PHT DRIVE** | Any, but with Bench Temp at 48°C | Increasing | • Mechanical Connection between IR-Detector and Sample Cell deteriorating<br>• IR-Photodetector deteriorating |
| **OFFSET** | Zero Cal | Increasing | • See MR Ratio - Zero Cal Decreasing above |
| | | Decreasing | • See MR Ratio - Zero Cal Increasing above |
| **SLOPE** | Span Cal | Increasing | • See MR Ratio - Span Cal Decreasing above |
| | | Decreasing | • See MR Ratio – Span Cal Increasing above |

# 11.3. MAINTENANCE PROCEDURES

The following procedures are to be performed periodically as part of the standard maintenance of the T300.

## 11.3.1. REPLACING THE SAMPLE PARTICULATE FILTER

The particulate filter should be inspected often for signs of plugging or contamination. We recommend that the filter and the wetted surfaces of the filter housing are handled as little as possible when you change the filter. Do not touch any part of the housing, filter element, PTFE retaining ring, glass cover and the o-ring.

To change the filter:

1. Turn OFF the analyzer to prevent drawing debris into the instrument.
2. Open the T300 Analyzer's hinged front panel and unscrew the knurled retaining ring on the filter assembly.

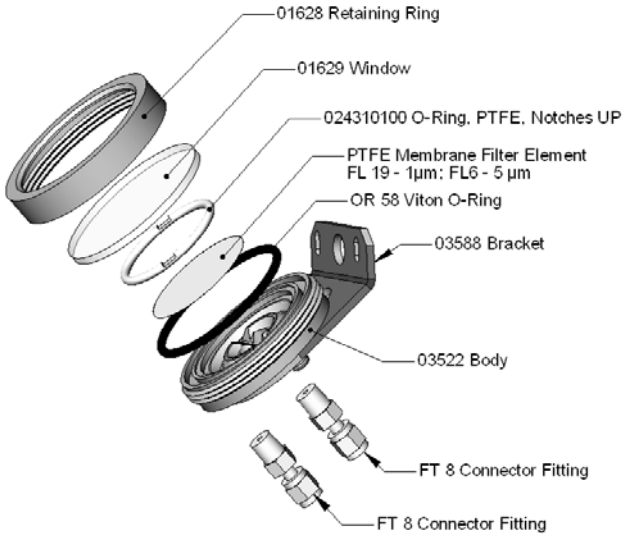


**Figure 11-1: Sample Particulate Filter Assembly**

3. Carefully remove the retaining ring, PTFE o-ring, glass filter cover and filter element.
4. Replace the filter, being careful that the element is fully seated and centered in the bottom of the holder.
5. Re-install the PTFE o-ring (with the notches up), the glass cover, then screw on the retaining ring and hand tighten. Inspect the seal between the edge of filter and the o-ring to assure a proper seal.
6. Re-start the Analyzer.

## 11.3.2. REBUILDING THE SAMPLE PUMP

The diaphragm in the sample pump periodically wears out and must be replaced. A sample rebuild kit is available – see label on the pump itself for the part number of the pump rebuild kit. Instructions and diagrams are included with the kit.

Always perform a Flow and Leak Check after rebuilding the Sample Pump.

## 11.3.3. PERFORMING LEAK CHECKS

Leaks are the most common cause of analyzer malfunction; Section 11.3.3.1 presents a simple leak check procedure. Section 11.3.3.2 details a more thorough procedure.

### 11.3.3.1. VACUUM LEAK CHECK AND PUMP CHECK

This method is easy and fast. It detects, but does not locate most leaks. It also verifies that the sample pump is in good condition.

1. Turn the analyzer ON, and allow enough time for flows to stabilize.
2. Cap the sample inlet port.
3. After several minutes, when the pressure has stabilized, scroll through the **TEST** menu, note the SAMPLE PRESSURE reading.
4. If the reading is < 10 in-Hg, the pump is in good condition and there are no large leaks.
5. Check the sample gas flow. If the flow is <10 $cm^3$/min and stable, there are no large leaks in the instrument's pneumatics.

### 11.3.3.2. PRESSURE LEAK CHECK

If you can't locate the leak by the above procedure, use the following procedure. Obtain a leak checker similar to the Teledyne API P/N 01960, which contains a small pump, shut-off valve and pressure gauge. Alternatively, a convenient source of low-pressure gas is a tank of span gas, with the two-stage regulator adjusted to less than 15 psi with a shutoff valve and pressure gauge.

**CAUTION**
**GENERAL SAFETY HAZARD**
**Do not use bubble solution with vacuum applied to the analyzer. The solution may contaminate the instrument. Do not exceed 15 PSIG pressure.**

1. Turn OFF power to the instrument.
2. Install a leak checker or tank of gas as described above on the sample inlet at the rear panel.
3. Remove the instrument cover and locate the inlet side of the sample pump. Remove the flow assembly from the pump and plug it with the appropriate gas-tight fitting.
4. Pressurize the instrument with the leak checker, allowing enough time to fully pressurize the instrument through the critical flow orifice. Check each fitting with soap bubble solution, looking for bubbles. Once the fittings have been wetted with soap solution, do not re-apply vacuum, as it will suck soap solution into the instrument and contaminate it. Do not exceed 15 psi pressure.

5. If the instrument has one of the zero and span valve options, the normally closed ports on each valve should also be separately checked. Connect the leak checker to the normally closed ports and check with soap bubble solution.
6. Once the leak has been located and repaired, the leak-down rate should be < 1 in-Hg (0.4 psi) in 5 minutes after the pressure is shut off.

## 11.3.4. PERFORMING A SAMPLE FLOW CHECK

**CAUTION**
**GENERAL SAFETY HAZARD**

**Always use a separate calibrated flow meter capable of measuring flows in the 0 – 1000 $cm^3$/min range to measure the gas flow rate though the analyzer.**

**DO NOT use the built in flow measurement viewable from the Front Panel of the instrument. This measurement is only for detecting major flow interruptions such as clogged or plugged gas lines.**

**See Figure 3-4 for SAMPLE port location.**

1. Attach the Flow Meter to the sample inlet port on the rear panel. Ensure that the inlet to the Flow Meter is at atmospheric pressure.
2. Sample flow should be 800 $cm^3$/min ± 10%.
3. Once an accurate measurement has been recorded by the method described above, adjust the analyzer's internal flow sensors (See Section 9.6.3).

Low flows indicate blockage somewhere in the pneumatic pathway, typically a plugged sintered filter or critical flow orifice in one of the analyzer's flow control assemblies. High flows indicate leaks downstream of the Flow Control Assembly.

## 11.3.5. CLEANING THE OPTICAL BENCH

The T300/T300M sensor assembly and optical bench are complex and delicate. Disassembly and cleaning is not recommended. Please check with the factory before disassembling the optical bench.

## 11.3.6. CLEANING EXTERIOR SURFACES OF THE T300/T300M

If necessary, the exterior surfaces of the T300/T300M can be cleaned with a clean damp cloth. Do NOT submerge any part of the instrument and do NOT use any cleaning solution.

# 12. TROUBLESHOOTING AND SERVICE

This contains a variety of methods for identifying the source of performance problems with the analyzer. Also included in this are procedures that are used in repairing the instrument.

**NOTE**

**QUALIFIED PERSONNEL**

**The operations outlined in this section must be performed by qualified maintenance personnel only.**

**CAUTION**

**GENERAL SAFETY HAZARD**

- **Risk of electrical shock. Some operations need to be carried out with the instrument open and running.**
- **Exercise caution to avoid electrical shocks and electrostatic or mechanical damage to the analyzer.**
- **Do not drop tools into the analyzer or leave those after your procedures.**
- **Do not shorten or touch electric connections with metallic tools while operating inside the analyzer.**
- **Use common sense when operating inside a running analyzer.**

## 12.1. GENERAL TROUBLESHOOTING

The T300/T300M Carbon Monoxide Analyzer has been designed so that problems can be rapidly detected, evaluated and repaired. During operation, it continuously performs diagnostic tests and provides the ability to evaluate its key operating parameters without disturbing monitoring operations.

A systematic approach to troubleshooting will generally consist of the following five steps:

1. Note any **WARNING MESSAGES** and take corrective action as necessary.
2. Examine the values of all TEST functions and compare them to factory values. Note any major deviations from the factory values and take corrective action.
3. Use the internal electronic status LEDs to determine whether the electronic communication channels are operating properly.
   - Verify that the DC power supplies are operating properly by checking the voltage test points on the relay PCA.
   - Note that the analyzer's DC power wiring is color-coded and these colors match the color of the corresponding test points on the relay PCA.

4. **SUSPECT A LEAK FIRST!**
   - Customer service data indicate that the majority of all problems are eventually traced to leaks in the internal pneumatics of the analyzer or the diluent gas and source gases delivery systems.
   - Check for gas flow problems such as clogged or blocked internal/external gas lines, damaged seals, punctured gas lines, a damaged / malfunctioning pumps, etc.
5. Follow the procedures defined in Section 12.5 to confirm that the analyzer's vital functions are working (power supplies, CPU, relay PCA, touchscreen, PMT cooler, etc.).
   - See Figure 3-6 for the general layout of components and sub-assemblies in the analyzer.
   - See the wiring interconnect diagram and interconnect list in Appendix D.

### 12.1.1. FAULT DIAGNOSIS WITH WARNING MESSAGES

The most common and/or serious instrument failures will result in a warning message being displayed on the front panel. Table 12-1 lists warning messages, along with their meaning and recommended corrective action.

It should be noted that if more than two or three warning messages occur at the same time, it is often an indication that some fundamental analyzer sub-system (power supply, relay board, motherboard) has failed rather than an indication of the specific failures referenced by the warnings. In this case, a combined-error analysis needs to be performed.

The analyzer will alert the user that a Warning message is active by flashing the FAULT LED, displaying the the Warning message in the Param field along with the **CLR** button (press to clear Warning message). The **MSG** button displays if there is more than one warning in queue or if you are in the TEST menu and have not yet cleared the message. The following display/touchscreen examples provide an illustration of each:

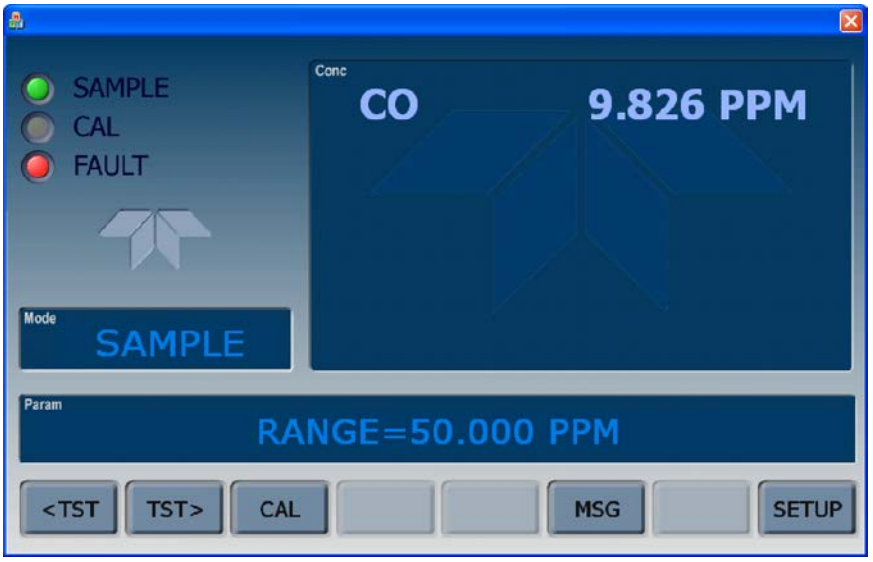


The analyzer will also alert the user via the Serial I/O COM port(s).

To view or clear the various warning messages press:

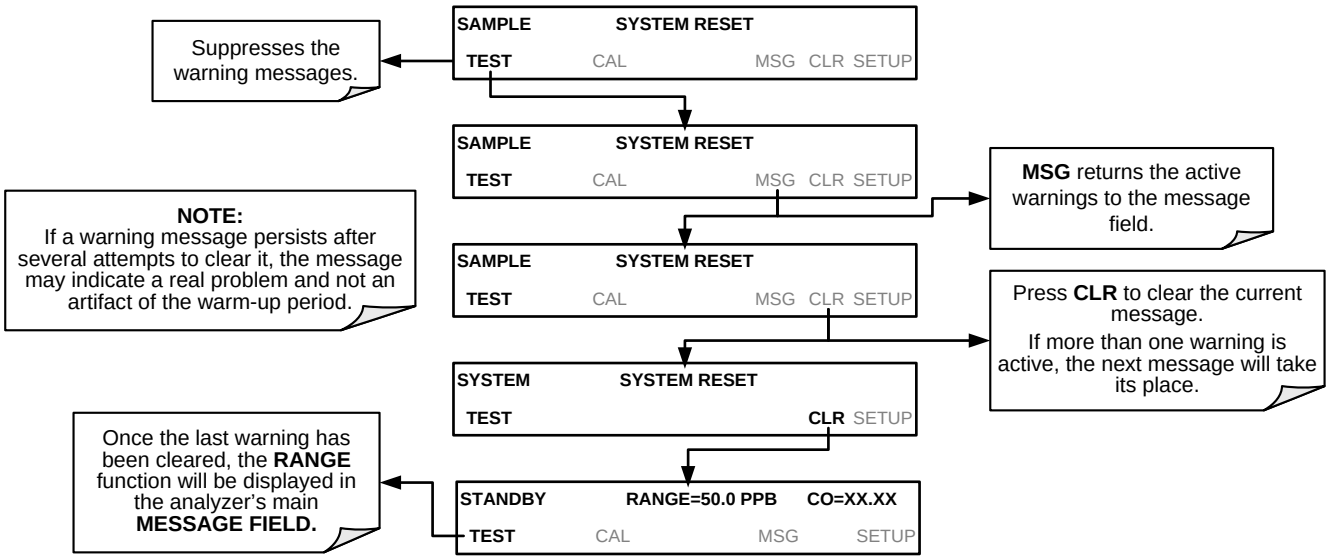


**Figure 12-1: Viewing and Clearing Warning Messages**

**Table 12-1: Warning Messages - Indicated Failures**

| WARNING MESSAGE | FAULT CONDITION | POSSIBLE CAUSES |
|---|---|---|
| **BENCH TEMP WARNING** | The optical bench temp is controlled at 48 ± 2 °C. | Bad bench heater<br>Bad bench temperature sensor<br>Bad relay controlling the bench heater<br>Entire relay board is malfunctioning<br>$I^2C$ bus malfunction |
| **BOX TEMP WARNING** | Box Temp is < 5 °C or > 48 °C. | NOTE: Box temperature typically runs ~7°C warmer than ambient temperature.<br>Poor/blocked ventilation to the analyzer.<br>Stopped exhaust-fan<br>Ambient temperature outside of specified range |
| **CANNOT DYN SPAN** | Dynamic Span operation failed | Measured concentration value is too high or low.<br>Concentration slope value to high or too low |
| **CANNOT DYN ZERO** | Dynamic Zero operation failed | Measured concentration value is too high.<br>Concentration offset value to high. |
| **CONFIG INITIALIZED** | Configuration and Calibration data reset to original Factory state. | Failed disk on module<br>User erased data |
| **DATA INITIALIZED** | Data Storage in DAS was erased | Failed disk on module<br>User cleared data |
| **PHOTO TEMP WARNING** | PHT DRIVE is >4800 mVDC | Failed IR photo-detector<br>Failed sync/demod board<br>IR photo-detector improperly attached to the sample chamber<br>Bench temp too high. |
| **REAR BOARD NOT DET** | Motherboard not detected on power up. | Warning only appears on serial I/O com port(s)<br>Front panel display will be frozen, blank or will not respond.<br>Massive failure of motherboard |
| **RELAY BOARD WARN** | The CPU cannot communicate with the Relay Board. | $I^2C$ bus failure<br>Failed relay board<br>Loose connectors/wiring |
| **SAMPLE FLOW WARN** | Sample flow rate is < 500 $cm^3$/min or > 1000 $cm^3$/min. | Failed sample pump<br>Blocked sample inlet/gas line<br>Dirty particulate filter<br>Leak downstream of critical flow orifice<br>Failed flow sensor/circuitry |
| **SAMPLE PRES WARN** | Sample Pressure is <10 in-Hg or > 35 in-Hg<br>Normally 29.92 in-Hg at sea level decreasing at 1 in-Hg per 1000 ft of altitude (with no flow – pump disconnected). | If sample pressure is < 10 in-hg:<br>Blocked particulate filter<br>Blocked sample inlet/gas line<br>Failed pressure sensor/circuitry<br>If sample pressure is > 35 in-hg:<br>Pressurized sample gas. Install vent<br>Blocked vent line on pressurized sample/zero/span gas supply<br>Bad pressure sensor/circuitry |

**Table 13-1: Warning Messages – Indicated Failures (cont.)**

| WARNING MESSAGE | FAULT CONDITION | POSSIBLE CAUSES |
|---|---|---|
| **SAMPLE TEMP WARN** | Sample temperature is < 10°C or > 100°C. | Ambient temperature outside of specified range<br>Failed bench heater<br>Failed bench temperature sensor<br>Relay controlling the bench heater<br>Failed relay board<br>$I^2C$ bus |
| **SOURCE WARNING** | Occurs when CO Ref is <1250 mVDC or >4950 mVDC.<br><br>Either of these conditions will result in an invalid M/R ratio. | GFC Wheel stopped<br>Failed sync/demod board<br>If status LEDs on the sync/demod board ARE flashing the cause is most likely a failed:<br>IR source<br>Relay board<br>$I^2C$ bus<br>IR photo-detector |
| **SYSTEM RESET** | The computer has rebooted. | This message occurs at power on. If you have not cycled the power on your instrument:<br>Failed +5 VDC power,<br>Fatal error caused software to restart<br>Loose connector/wiring |
| **WHEEL TEMP WARNING** | The filter wheel temperature is controlled at 68 ± 2 °C | Blocked cooling vents below GFC Assembly. Make sure that adequate clear space beneath the analyzer.<br>Analyzer's top cover removed<br>Wheel heater<br>Wheel temperature sensor<br>Relay controlling the wheel heater<br>Entire relay board<br>$I^2C$ bus |

## 12.1.2. FAULT DIAGNOSIS WITH TEST FUNCTIONS

Besides being useful as predictive diagnostic tools, the test functions viewable from the front panel can be used to isolate and identify many operational problems when combined with a thorough understanding of the analyzer's Theory of Operation (see Section 13).

The acceptable ranges for these test functions are listed in the "Nominal Range" column of the analyzer *Final Test and Validation Data Sheet* (T300, P/N 04307 and T300M, P/N 04311) shipped with the instrument. Values outside these acceptable ranges indicate a failure of one or more of the analyzer's subsystems. Functions whose values are still within the acceptable range but have significantly changed from the measurement recorded on the factory data sheet may also indicate a failure.

**Note** **A worksheet has been provided in Appendix C to assist in recording the value of these test functions. This worksheet also includes expected values for the various test functions.**

The following table contains some of the more common causes for these values to be out of range.

**Table 12-2: Test Functions - Indicated Failures**

| TEST FUNCTIONS (As Displayed) | INDICATED FAILURE(S) |
|---|---|
| **TIME** | Time of day clock is too fast or slow.<br>To adjust, see Section 5.6.<br>Battery in clock chip on CPU board may be dead. |
| **RANGE** | Incorrectly configured measurement range(s) could cause response problems with a Data logger or chart recorder attached to one of the analog output.<br>If the Range selected is too small, the recording device will over range.<br>If the Range is too big, the device will show minimal or no apparent change in readings. |
| **STABIL** | Indicates noise level of instrument or CO concentration of sample gas (see Section 12.4.2 for causes). |
| **CO MEAS & CO REF** | If the value displayed is too high the IR Source has become brighter. Adjust the variable gain potentiometer on the sync/demod board (see Section 12.5.7.1).<br>If the value displayed is too low or constantly changing and the **CO REF** is OK:<br>• Failed multiplexer on the motherboard<br>• Failed sync/demod board<br>• Loose connector or wiring on sync/demod board<br>• If the value displayed is too low or constantly changing and the CO REF is bad:<br>• GFC Wheel stopped or rotation is too slow<br>• Failed sync/demod board IR source<br>• Failed IR source<br>• Failed relay board<br>• Failed $I^2C$ bus<br>• Failed IR photo-detector |
| **MR Ratio** | When the analyzer is sampling zero air and the ratio is too low:<br>• The reference cell of the GFC Wheel is contaminated or leaking.<br>• The alignment between the GFC Wheel and the segment sensor, the M/R sensor or both is incorrect.<br>• Failed sync/demod board<br>When the analyzer is sampling zero air and the ratio is too high:<br>• Zero air is contaminated<br>• Failed IR photo-detector |
| **PRES** | See Table 12-1 for **SAMPLE PRES WARN.** |
| **SAMPLE FL** | Check for gas flow problems (see Section 12.2). |
| **SAMP TEMP** | SAMPLE TEMP should be close to BENCH TEMP. Temperatures outside of the specified range or oscillating temperatures are cause for concern. |
| **BENCH TEMP** | Bench temp control improves instrument noise, stability and drift. Temperatures outside of the specified range or oscillating temperatures are cause for concern. Table 12-1 for BENCH TEMP WARNING. |
| **WHEEL TEMP** | Wheel temp control improves instrument noise, stability and drift. Outside of set point or oscillating temperatures are causes for concern. See Table 12-1 for WHEEL TEMP WARNING. |
| **BOX TEMP** | If the box temperature is out of range, check fan in the power supply module. Areas to the side and rear of instrument should allow adequate ventilation. See Table 12-1 for BOX TEMP WARNING. |
| **PHT DRIVE** | If this drive voltage is out of range it may indicate one of several problems:<br>• A poor mechanical connection between the photodetector, its associated mounting hardware and the absorption cell housing;<br>• An electronic failure of the IR Photo-Detector's built-in cooling circuitry, or;<br>• A temperature problem inside the analyzer chassis. In this case other temperature warnings would also be active such as BENCH TEMP WARNING or BOX TEMP WARNING. |

| TEST FUNCTIONS (As Displayed) | INDICATED FAILURE(S) |
|---|---|
| **SLOPE** | Values outside range indicate<br>Contamination of the zero air or span gas supply<br>Instrument is Miscalibrated<br>Blocked gas flow<br>Contaminated or leaking GFC Wheel (either chamber)<br>Faulty IR photo-detector<br>Faulty sample faulty IR photo-detector pressure sensor (P1) or circuitry<br>Invalid M/R ratio (see above)<br>Bad/incorrect span gas concentration due. |
| **OFFSET** | Values outside range indicate<br>Contamination of the zero air supply<br>Contaminated or leaking GFC Wheel (either chamber)<br>Faulty IR photo-detector |

## 12.1.3. THE DIAGNOSTIC SIGNAL I/O FUNCTION

The signal I/O diagnostic mode allows access to the digital and analog I/O in the analyzer. Some of the digital signals can be controlled through the touchscreen. These signals, combined with a thorough understanding of the instruments Theory of Operation (found in Section 13), are useful for troubleshooting in three ways:

- The technician can view the raw, unprocessed signal level of the analyzer's critical inputs and outputs.
- Many of the components and functions that are normally under algorithmic control of the CPU can be manually exercised.
- The technician can directly control the signal level Analog and Digital Output signals.

This allows the technician to observe systematically the effect of directly controlling these signals on the operation of the analyzer. The following flowchart shows an example of how to use the Signal I/O menu to view the raw voltage of an input signal or to control the state of an output voltage or control signal. (See also Sections 5.9.1 and 12.5.8.1).

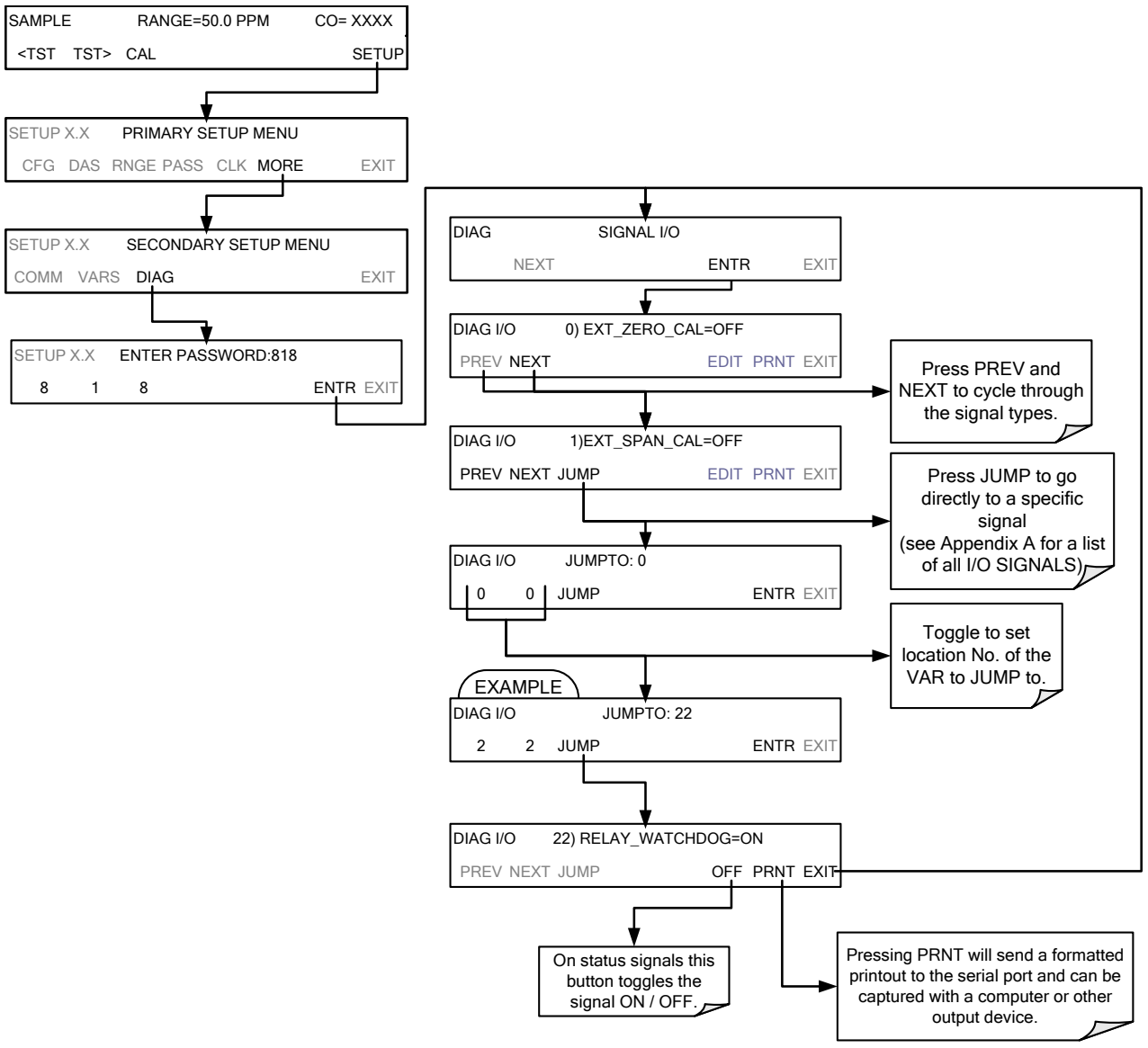


**Figure 12-2: Example of Signal I/O Function**

**Note**

**Any I/O signals changed while in the signal I/O menu will remain in effect ONLY until signal I/O menu is exited. The Analyzer regains control of these signals upon exit. See Appendix A-4 for a complete list of the parameters available for review under this menu.**

## 12.1.4. STATUS LEDS

Several color-coded light-emitting diodes (LEDs) are located inside the instrument to assist in determining if the analyzer's CPU, $I^2C$ bus and relay board, GFC Wheel and the sync/demodulator board are functioning properly.

### 12.1.4.1. MOTHERBOARD STATUS INDICATOR (WATCHDOG)

DS5, a red LED, that is located on upper portion of the motherboard, just to the right of the CPU board, flashes when the CPU is running the main program loop. After power-up, approximately 30 to 60 seconds, DS5 should flash on and off. If characters are written to the front panel display but DS5 does not flash then the program files have become corrupted. If after 30 – 60 seconds neither the DS5 is flashing or no characters have been written to the front panel display then the CPU is bad and must be replaced.

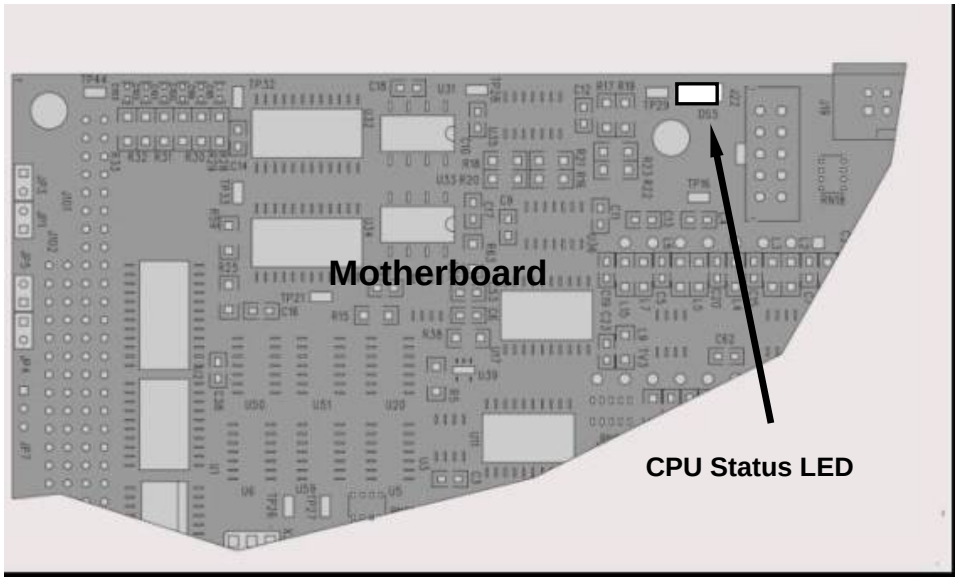


**Figure 12-3: CPU Status Indicator**

### 12.1.4.2. **SYNC DEMODULATOR STATUS LEDS**

Two LEDs located on the Sync/Demod Board and are there to make it obvious that the GFC Wheel is spinning and the synchronization signals are present:

**Table 12-3: Sync/Demod Board Status Failure Indications**

| LED | FUNCTION | FAULT STATUS | INDICATED FAILURE(S) |
|---|---|---|---|
| **D1** | **M/R Sensor Status**<br><br>**(Flashes slowly)** | **LED is stuck ON or OFF** | GFC Wheel is not turning<br>M/R Sensor on Opto-Pickup Board failed<br>Sync/Demod Board failed<br>JP 4 Connector/Wiring faulty<br>Failed/Faulty +5 VDC Power Supply (PS1) |
| **D2** | **Segment Sensor Status**<br><br>**(Flashes quickly)** | **LED is stuck ON or OFF** | GFC Wheel is not turning<br>Segment Sensor on Opto-Pickup Board failed<br>Sync/Demod Board failed<br>JP 4 Connector/Wiring faulty<br>Failed/Faulty +5 VDC Power Supply (PS1) |

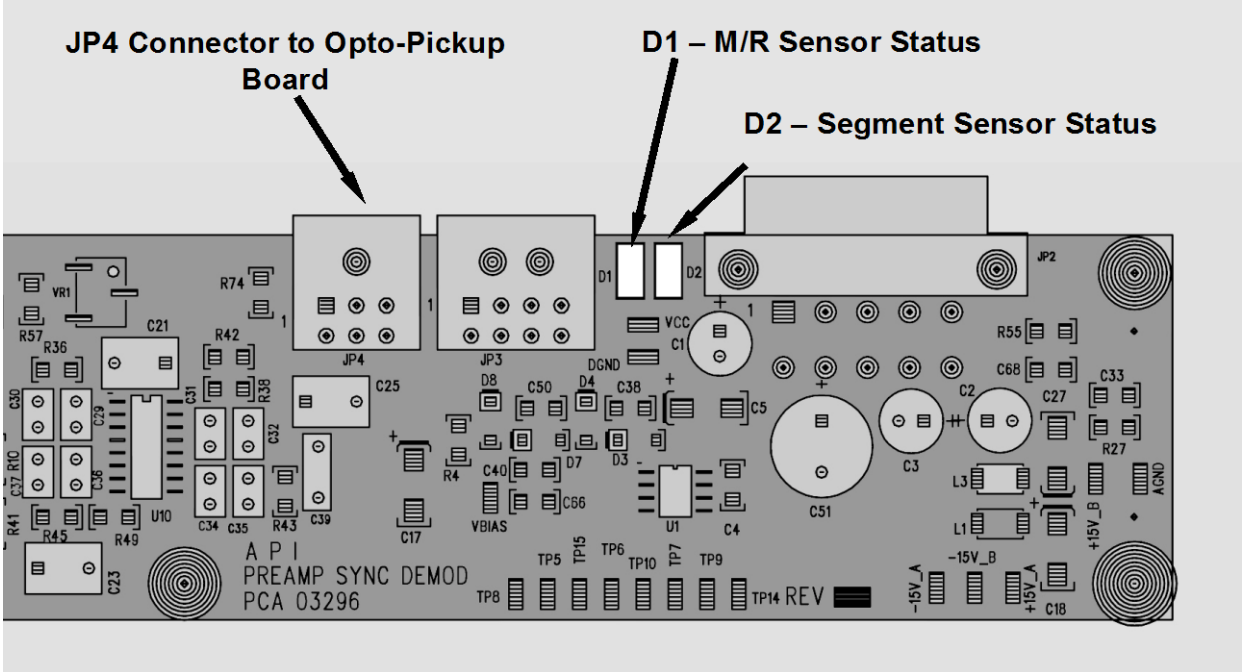


**Figure 12-4: Sync/Demod Board Status LED Locations**

### 12.1.4.3. **RELAY BOARD STATUS LEDS**

There are eight LEDs located on the Relay Board. The most important of which is D1, which indicates the health of the $I^2C$ bus. If D1 is blinking the other faults following LEDs can be used in conjunction with **DIAG** menu signal I/O to identify hardware failures of the relays and switches on the relay (see Section 12.1.3 and Appendix D).

**Table 12-4: $I^2C$ Status LED Failure Indications**

| LED | FUNCTION | FAULT STATUS | INDICATED FAILURE(S) |
|---|---|---|---|
| D1 (Red) | $I^2C$ bus Health (Watch Dog Circuit) | Continuously ON or Continuously OFF | Failed/Halted CPU<br>Faulty Motherboard, Touchscreen or Relay Board<br>Faulty Connectors/Wiring between Motherboard, Touchscreen or Relay Board<br>Failed/Faulty +5 VDC Power Supply (PS1) |

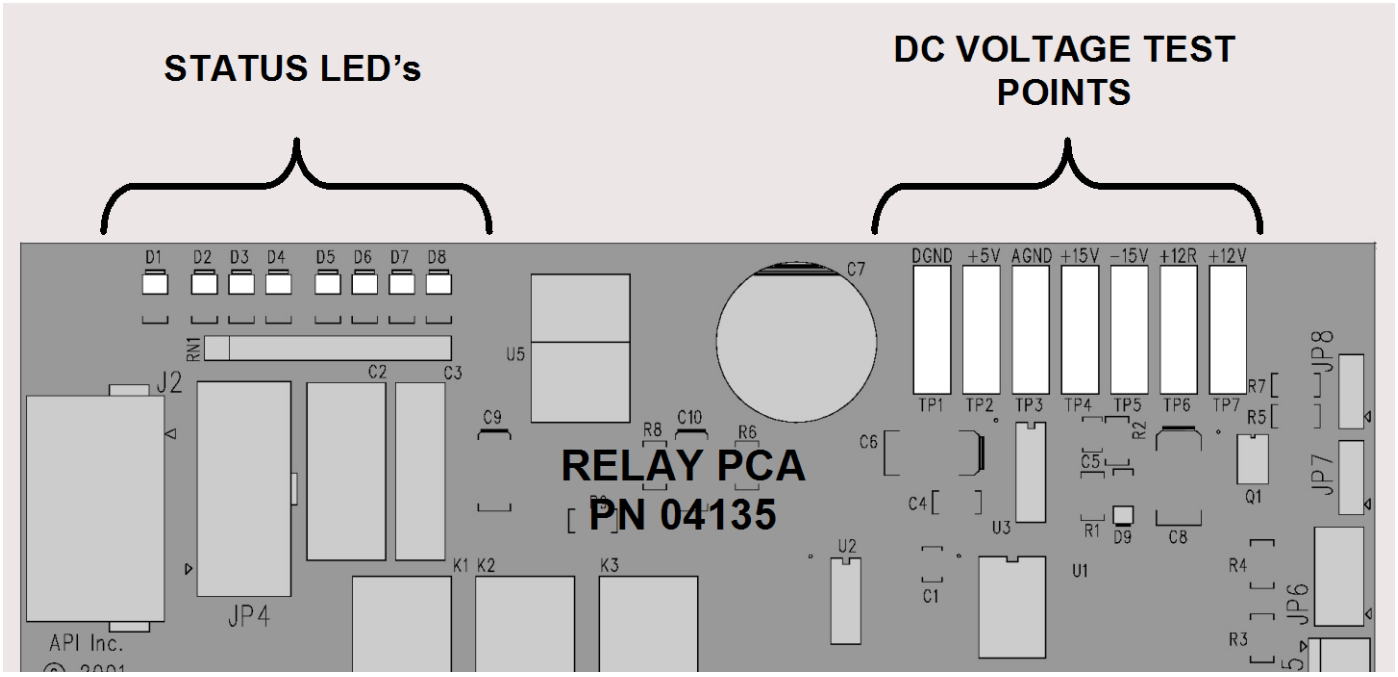


**Figure 12-5: Relay Board Status LEDs**

**Table 12-5: Relay Board Status LED Failure Indications**

| LED | FUNCTION | SIGNAL I/O PARAMETER | | DIAGNOSTIC TECHNIQUE |
|---|---|---|---|---|
| | | ACTIVATED BY | VIEW RESULT | |
| D2 Yellow | Wheel Heater | **WHEEL_HEATER** | **WHEEL_TEMP** | Voltage displayed should change. If not:<br>Failed Heater<br>Faulty Temperature Sensor<br>Failed AC Relay<br>Faulty Connectors/Wiring |
| D3 Yellow | Bench Heater | **BENCH_HEATER** | **BENCH_TEMP** | Voltage displayed should change. If not:<br>Failed Heater<br>Faulty Temperature Sensor<br>Failed AC Relay<br>Faulty Connectors/Wiring |
| D4 Yellow | Spare | **N/A** | **N/A** | N/A |
| D5 Green | Sample/Cal Gas Valve Option | **CAL_VALVE** | **N/A** | Sample/Cal Valve should audibly change states. If not:<br>Failed Valve<br>Failed Relay Drive IC on Relay Board<br>Failed Relay Board<br>Faulty +12 VDC Supply (PS2)<br>Faulty Connectors/Wiring |
| D6 Green | Zero/Span Gas Valve Option | **SPAN_VALVE** | **N/A** | Zero/Span Valve should audibly change states. If not:<br>Failed Valve<br>Failed Relay Drive IC on Relay Board<br>Failed Relay Board<br>Faulty +12 VDC Supply (PS2)<br>Faulty Connectors/Wiring |
| D7 Green | Shutoff Valve Option | **SHUTOFF_VALVE** | **N/A** | Shutoff Valve should audibly change states. If not:<br>Failed Valve<br>Failed Relay Drive IC on Relay Board<br>Failed Relay Board<br>Faulty +12 VDC Supply (PS2)<br>Faulty Connectors/Wiring |
| D8 Green | IR SOURCE | **IR_SOURCE** | **CO_MEASURE** | Voltage displayed should change. If not:<br>Failed IR Source<br>Faulty +12 VDC Supply (PS2)<br>Failed Relay Board<br>Failed IR Photo-Detector<br>Failed Sync/Demod Board<br>Faulty Connectors/Wiring |

# 12.2. GAS FLOW PROBLEMS

When troubleshooting flow problems, it is a good idea to first confirm that the actual flow and not the analyzer's flow sensor and software are in error, or the flow meter is in error. Use an independent flow meter to perform a flow check as described in Section 11.3.4. If this test shows the flow to be correct, check the pressure sensors as described in Section 12.5.7.6.

The T300/T300M has one main gas flow path. With the IZS or zero/span valve option installed, there are several subsidiary paths but none of those are displayed on the front panel or stored by the DAS.

With the $O_2$ sensor option installed, third gas flow controlled with a critical flow orifice is added, but this flow is not measured or reported.

In general, flow problems can be divided into three categories:

1. Flow is too high
2. Flow is greater than zero, but is too low, and/or unstable
3. Flow is zero (no flow)

When troubleshooting flow problems, it is crucial to confirm the actual flow rate without relying on the analyzer's flow display. The use of an independent, external flow meter to perform a flow check as described in Section 11.3.4 is essential.

The flow diagrams found in a variety of locations within this manual depicting the T300/T300M in its standard configuration and with options installed can help in trouble-shooting flow problems. For your convenience they are collected here.

## 12.2.1. **T300/T300M INTERNAL GAS FLOW DIAGRAMS**

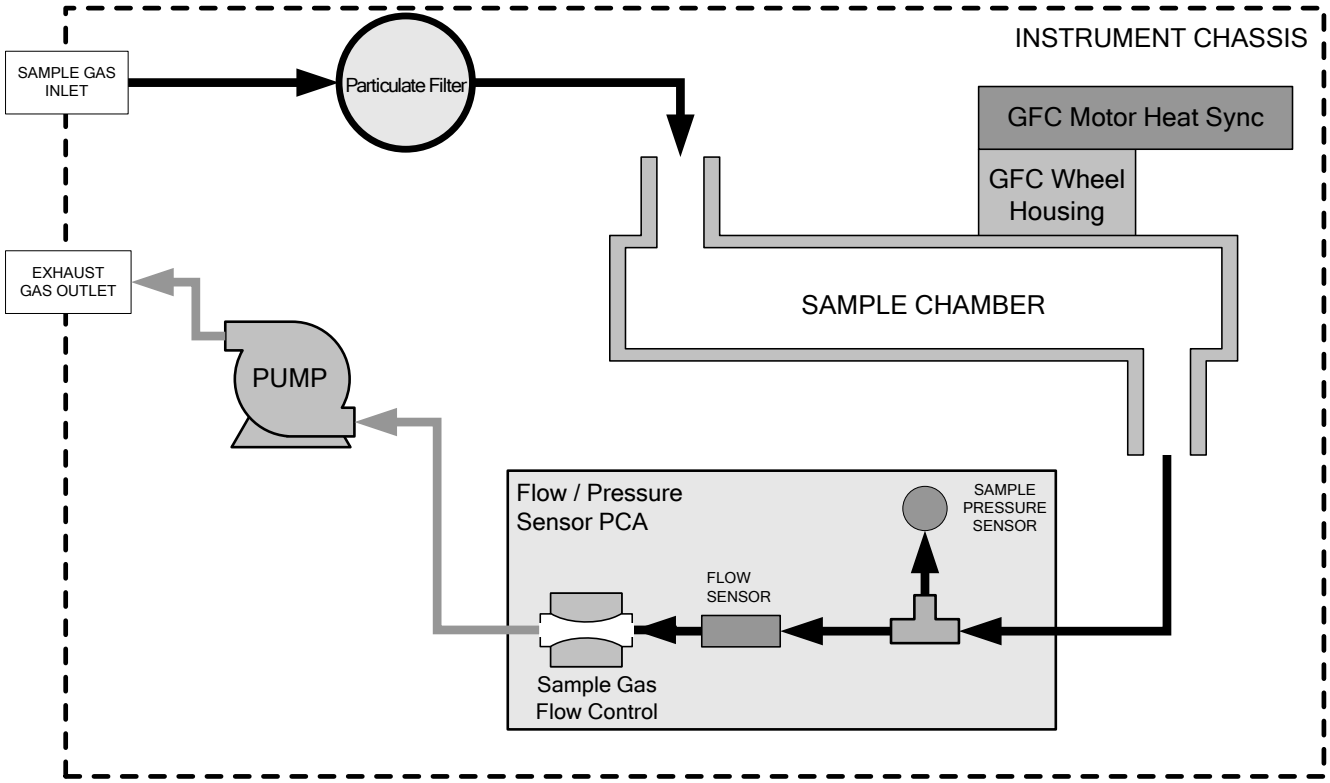


**Figure 12-6: T300/T300M – Basic Internal Gas Flow**

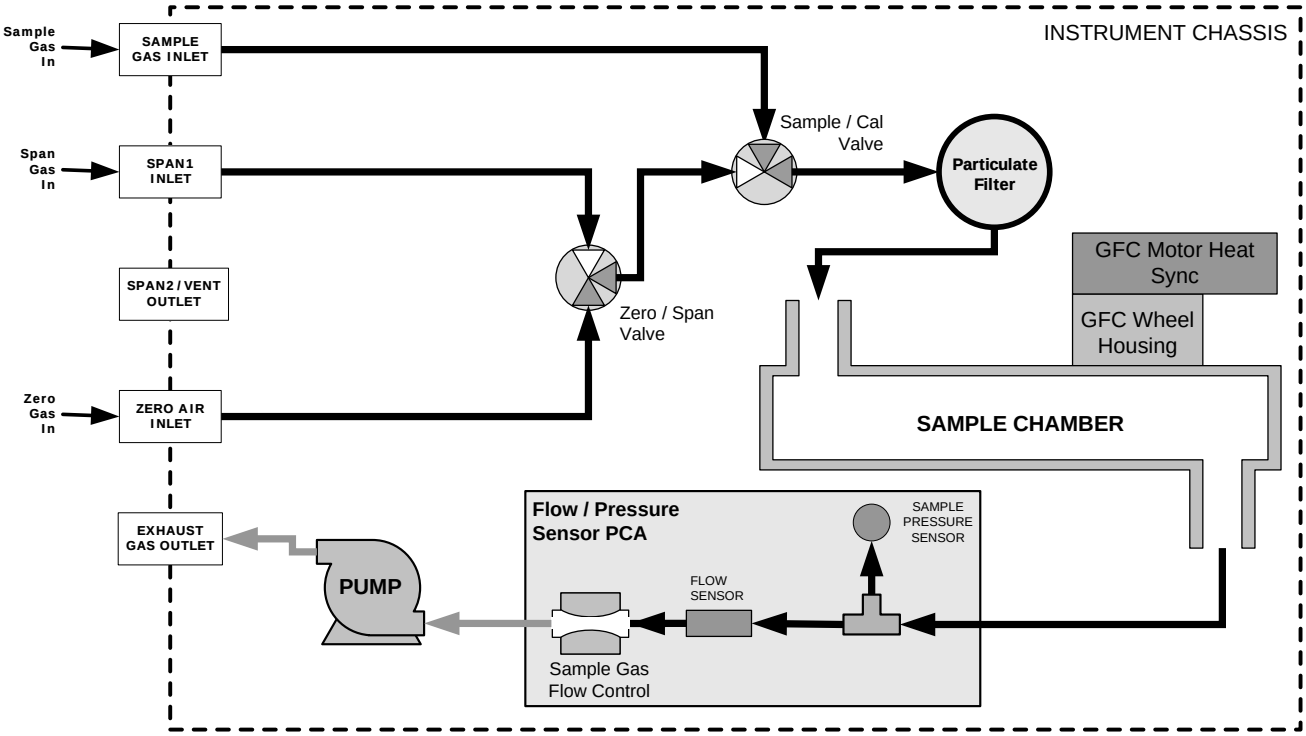


**Figure 12-7: Internal Pneumatic Flow OPT 50A – Zero/Span Valves (OPT 50A & 50B)**

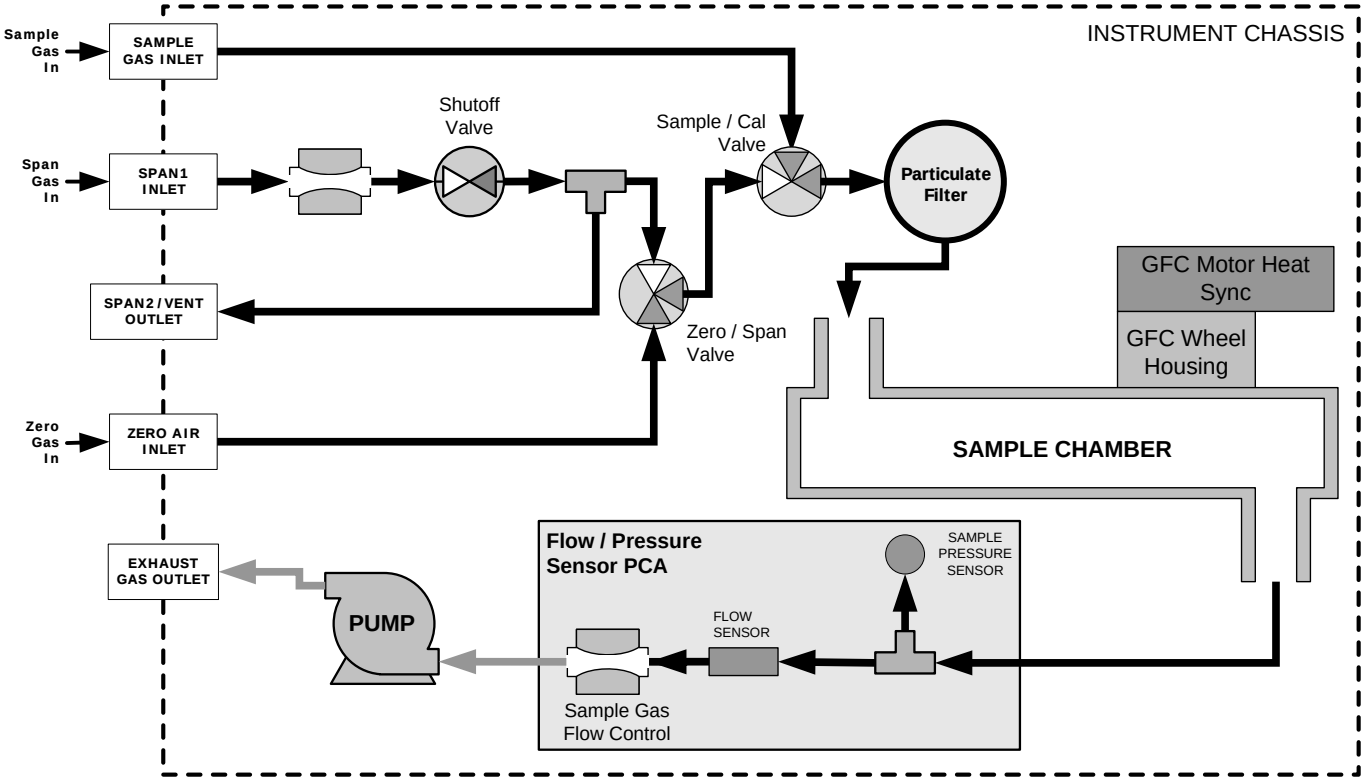


**Figure 12-8: Internal Pneumatic Flow OPT 50B – Zero/Span/Shutoff Valves**

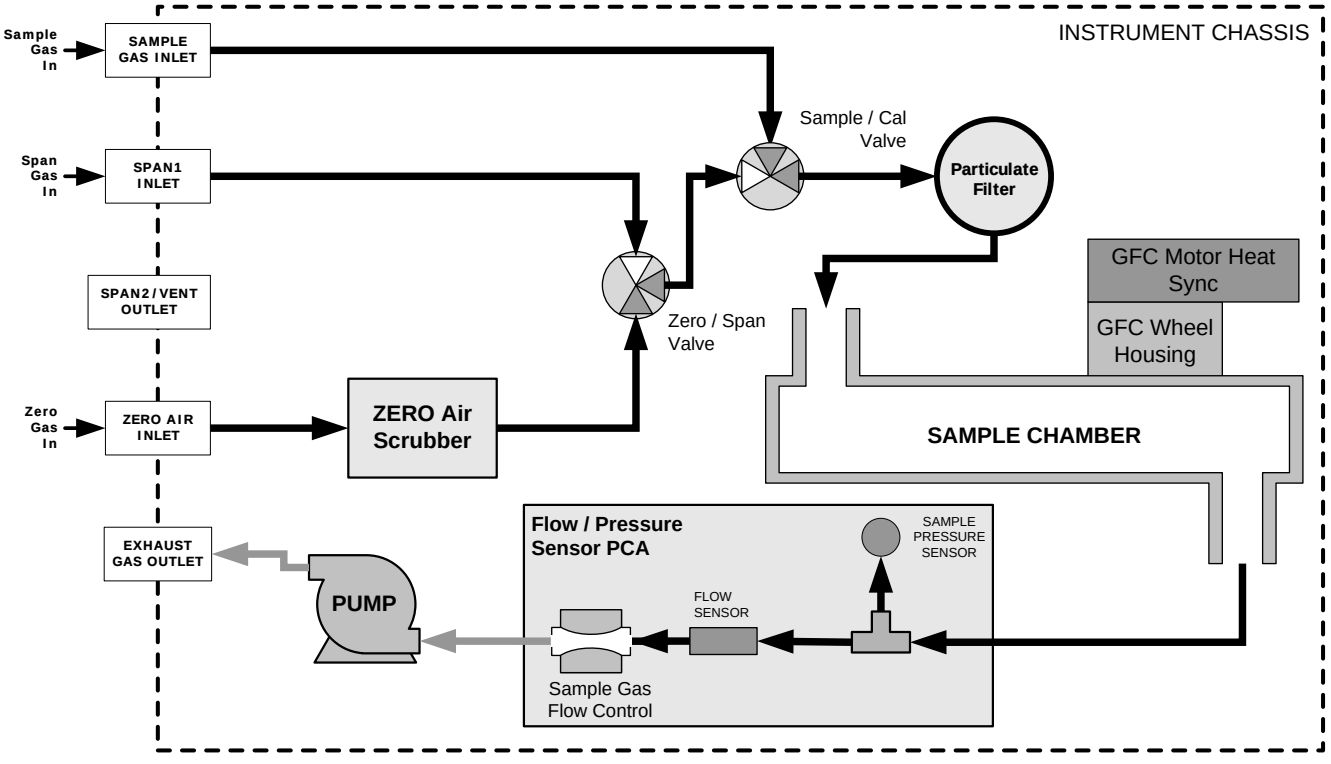


**Figure 12-9: Internal Pneumatic Flow OPT 50H – Zero/Span Valves with Internal Zero Air Scrubber**

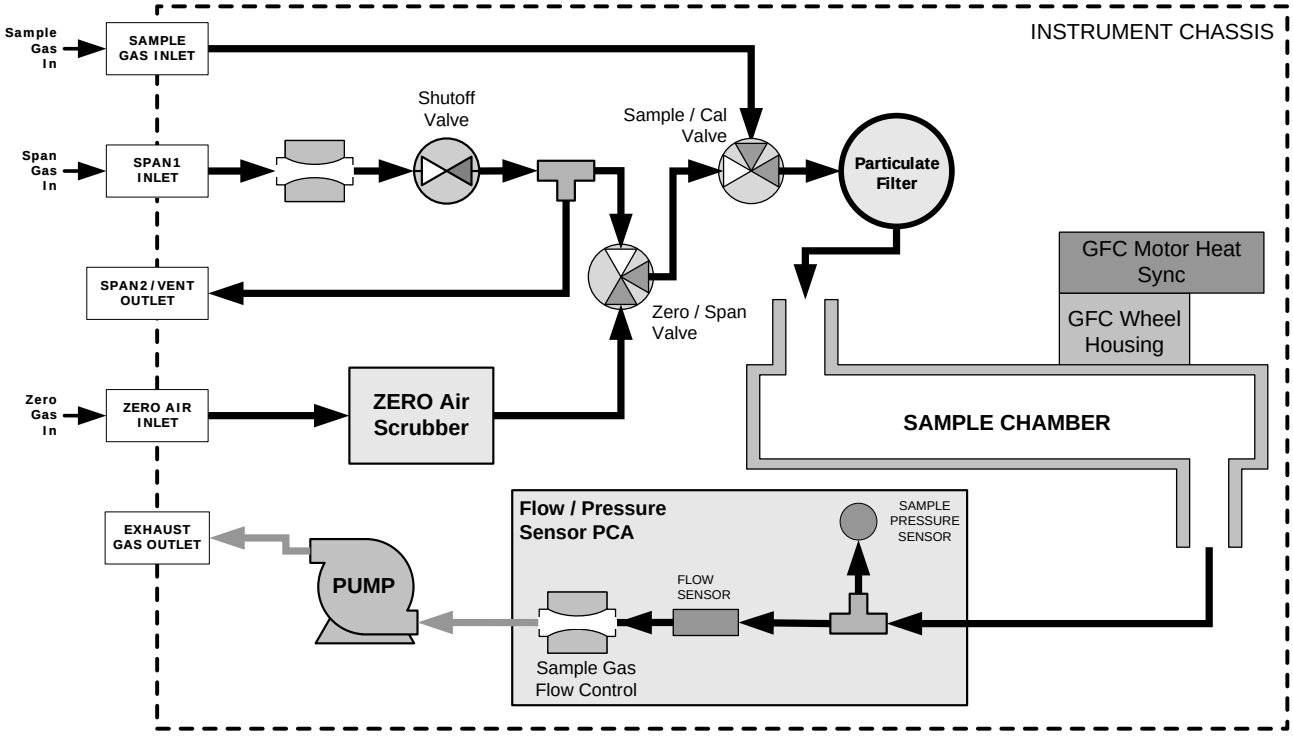


**Figure 12-10: Internal Pneumatic Flow OPT 50E – Zero/Span/Shutoff w/ Internal Zero Air Scrubber**

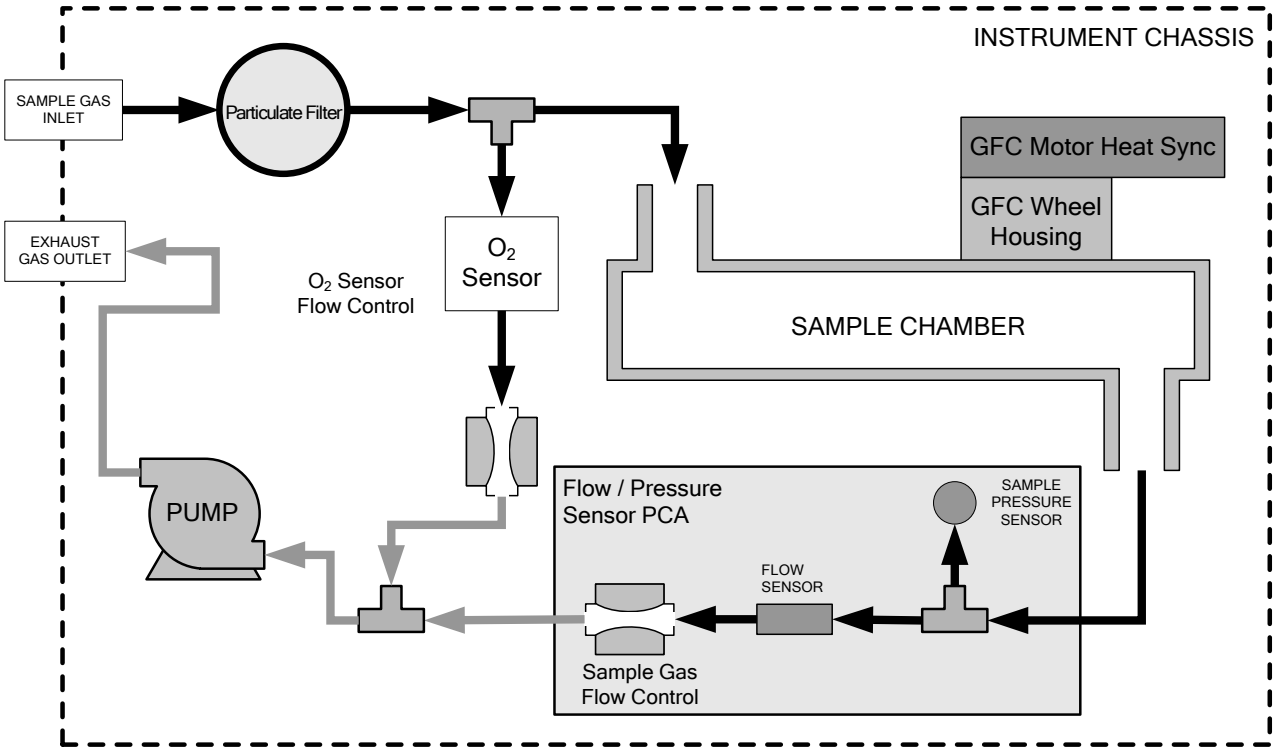


**Figure 12-11: T300/T300M – Internal Pneumatics with $O_2$ Sensor Option 65A**

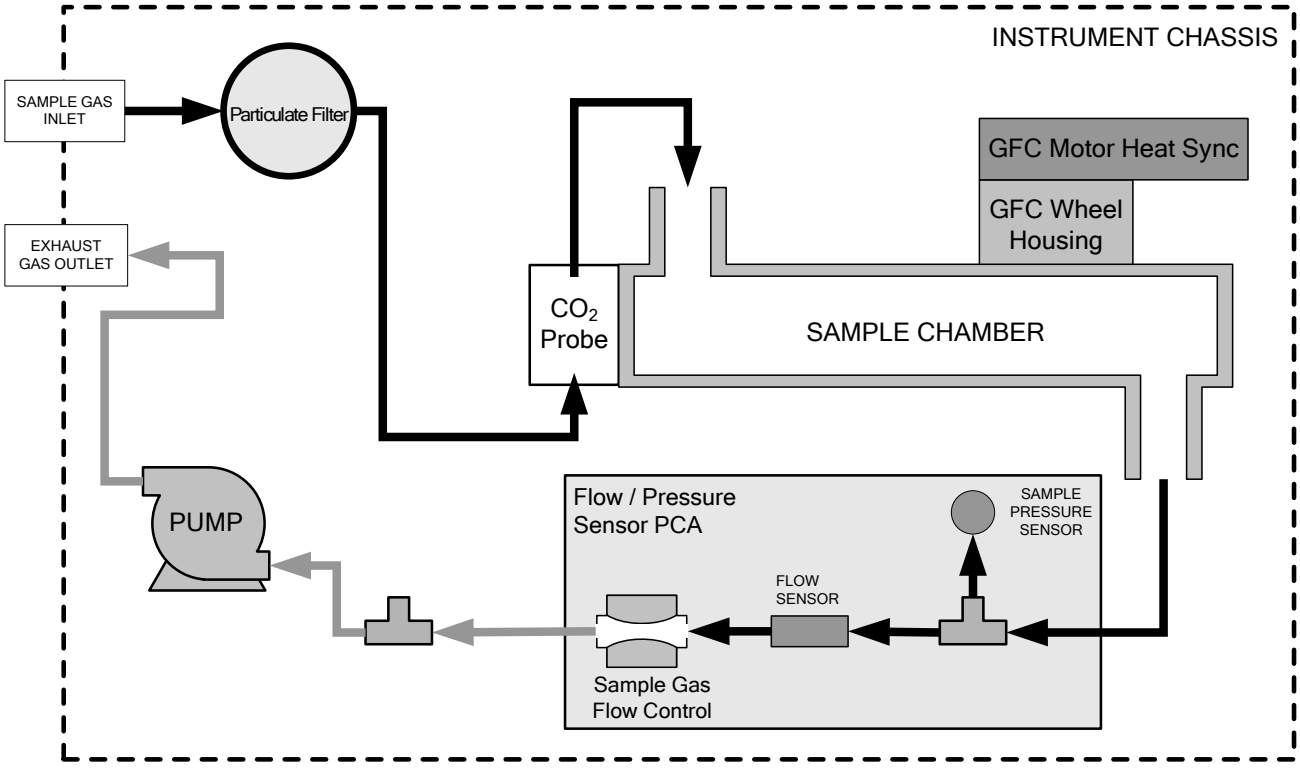


**Figure 12-12: T300/T300M – Internal Pneumatics with $CO_2$ Sensor Option 67A**

## 12.2.2. TYPICAL SAMPLE GAS FLOW PROBLEMS

### 12.2.2.1. FLOW IS ZERO

The unit displays a SAMPLE FLOW warning message on the front panel display or the SAMPLE FLOW test function reports a zero or very low flow rate.

Confirm that the sample pump is operating (turning). If not, use an AC voltmeter to make sure that power is being supplied to the pump if no power is present at the electrical leads of the pump.

1. If AC power is being supplied to the pump, but it is not turning, replace the pump.
2. If the pump is operating but the unit reports no gas flow, perform a flow check as described in Section 11.3.4.
3. If no independent flow meter is available:
   - Disconnect the gas lines from both the sample inlet and the exhaust outlet on the rear panel of the instrument.
   - Make sure that the unit is in basic SAMPLE Mode.
   - Place a finger over an Exhaust outlet on the rear panel of the instrument.
   - If gas is flowing through the analyzer, you will feel pulses of air being expelled from the Exhaust outlet.

4. If gas flows through the instrument when it is disconnected from its sources of zero air, span gas or sample gas, the flow problem is most likely not internal to the analyzer. Check to make sure that:
   - All calibrators/generators are turned on and working correctly.
   - Gas bottles are not empty or low.
   - Valves, regulators and gas lines are not clogged or dirty.

#### 12.2.2.2. **LOW FLOW**

1. Check if the pump diaphragm is in good condition. If not, rebuild the pump (see Section 11.3.2). Check the Spare Parts List for information on pump rebuild kits.
2. Check for leaks as described in Section 11.3.3. Repair the leaking fitting, line or valve and re-check.
3. Check for the sample filter and the orifice filter for dirt. Replace filters (see 11.3.1).
4. Check for partially plugged pneumatic lines, or valves. Clean or replace them.
5. Check for plugged or dirty critical flow orifices. Replace them.
6. If an IZS option is installed in the instrument, press CALZ and CALS. If the flow increases then suspect a bad sample/cal valve.

#### 12.2.2.3. **HIGH FLOW**

The most common cause of high flow is a leak in the sample flow control assembly or between there and the pump. If no leaks or loose connections are found in the fittings or the gas line between the orifice and the pump, replace the critical flow orifice(s) inside the sample flow control assembly.

#### 12.2.2.4. **DISPLAYED FLOW = "WARNINGS"**

This warning means that there is inadequate gas flow. There are four conditions that might cause this:

1. A leak upstream or downstream of the flow sensor
2. A flow obstruction upstream or downstream of the flow sensor
3. Bad Flow Sensor Board
4. Bad pump

To determine which case is causing the flow problem, view the sample pressure and sample flow functions on the front panel. If the sample pressure is reading abnormally low, then the cause is likely a flow obstruction upstream of the flow sensor. First, check the sample filter and make sure it is not plugged and then systematically check all the other components upstream of the orifice to ensure that they are not obstructed.

If the sample pressure is reading normal but the sample flow is reading low then it is likely that the pump diaphragm is worn or there is an obstruction downstream of the flow sensor.

#### 12.2.2.5. **ACTUAL FLOW DOES NOT MATCH DISPLAYED FLOW**

If the actual flow measured does not match the displayed flow, but is within the limits of 720-880 $cm^3$/min, adjust the calibration of the flow measurement as described in Section 11.3.4.

#### 12.2.2.6. **SAMPLE PUMP**

The sample pump should start immediately after the front panel power switch is turned ON. With the Sample Inlet plugged, the test function PRES should read about 10 in-Hg for a pump that is in good condition. The pump needs rebuilding if the reading is above 10 in-Hg. If the test function SAMP FL is greater than 10 $cm^3$/min there is a leak in the pneumatic lines.

## 12.3. CALIBRATION PROBLEMS

### 12.3.1. **MISCALIBRATED**

There are several symptoms that can be caused by the analyzer being miscalibrated. This condition is indicated by out of range Slopes and Offsets as displayed through the test functions and is frequently caused by the following:

1. Bad span gas. This can cause a large error in the slope and a small error in the offset. Delivered from the factory, the T300 Analyzer's slope is within ±15% of nominal. Bad span gas will cause the analyzer to be calibrated to the wrong value. If in doubt have the span gas checked by an independent lab.
2. Contaminated zero gas. Excess $H_2O$ can cause a positive or negative offset and will indirectly affect the slope.
3. Dilution calibrator not set up correctly or is malfunctioning. This will also cause the slope, but not the zero, to be incorrect. Again the analyzer is being calibrated to the wrong value.

4. Too many analyzers on the manifold. This can cause either a slope or offset error because ambient gas with its pollutants will dilute the zero or span gas.

## 12.3.2. NON-REPEATABLE ZERO AND SPAN

As stated earlier, leaks both in the T300/T300M and in the external system are a common source of unstable and non-repeatable readings.

1. Check for leaks in the pneumatic systems as described in Section 11.3.3. Don't forget to consider pneumatic components in the gas delivery system outside the T300/T300M such as:
   - A change in zero air source such as ambient air leaking into zero air line, or;
   - A change in the span gas concentration due to zero air or ambient air leaking into the span gas line.
2. Once the instrument passes a leak check, perform a flow check (see Section 11.3.4) to make sure adequate sample is being delivered to the sensor assembly.
3. A failing IR photo-detector may be at fault. Check the **CO MEAS** and **CO REF** test functions via the front panel display to make sure the signal levels are in the normal range (See Appendix A) and are quiet.
4. Confirm the sample pressure, wheel temperature, bench temperature, and sample flow readings are correct and have steady readings.
5. Disconnect the exhaust line from the optical bench near the rear of the instrument and plug this line into the SAMPLE inlet creating a pneumatic loop. The CO concentration (either zero or span) now must be constant. If readings become quiet, the problem is in the external pneumatics supplies for sample gas, span gas or zero air.
6. If pressurized span gas is being used with a zero/span valve option, make sure that the venting is adequate.

## 12.3.3. INABILITY TO SPAN – NO SPAN BUTTON (CALS)

1. Confirm that the carbon monoxide span gas source is accurate; this can be done by switching between two span-gas tanks. If the CO concentration is different, there is a problem with one of the tanks.
2. Check for leaks in the pneumatic systems as described in Section 11.3.3.
3. Make sure that the expected span gas concentration entered into the instrument during calibration is the correct span gas concentration and not too different from expected span value. This can be viewed via the CONC submenu of the Sample Displays.
4. Check to make sure that there is no ambient air or zero air leaking into span gas line.

## 12.3.4. INABILITY TO ZERO – NO ZERO BUTTON (CALZ)

1. Confirm that there is a good source of zero air. Dilute a tank of span gas with the same amount of zero air from two different sources. If the CO Concentration of the two measurements is different, there is a problem with one of the sources of zero air.
2. Check for leaks in the pneumatic systems as described in 11.3.3.
3. If the analyzer has had zero/span valve options, the CO scrubber may need maintenance.
4. Check to make sure that there is no ambient air leaking into zero air line.

# 12.4. OTHER PERFORMANCE PROBLEMS

Dynamic problems (i.e. problems which only manifest themselves when the analyzer is monitoring sample gas) can be the most difficult and time consuming to isolate and resolve. The following provides an itemized list of the most common dynamic problems with recommended troubleshooting checks and corrective actions.

## 12.4.1. TEMPERATURE PROBLEMS

Individual control loops are used to maintain the set point of the absorption bench, filter wheel and IR photo-detector temperatures. If any of these temperatures are out of range or are poorly controlled, the T300/T300M will perform poorly.

### 12.4.1.1. BOX OR SAMPLE TEMPERATURE

#### BOX TEMPERATURE

The box temperature sensor is mounted to the motherboard and cannot be disconnected to check its resistance. Rather check the **BOX TEMP** signal using the SIGNAL I/O function under the **DIAG** Menu (See Section 5.9.1). This parameter will vary with ambient temperature, but at ~30°C (6-7° above room temperature) the signal should be ~1450 mV.

#### SAMPLE TEMPERATURE

The Sample Temperature should closely track the bench temperature. If it does not, locate the sensor, which is located at the midpoint of the optical bench in a brass fitting. Unplug the connector labeled "Sample", and measure the resistance of the thermistor; at room temperature (25°C) it should be ~30K Ohms, at operating temperature, 48°C, it should be ~ 12K Ohms

### 12.4.1.2. BENCH TEMPERATURE

There are three possible failures that could cause the Bench temperature to be incorrect.

1. The heater mounted to the bottom of the Absorption bench is electrically shorted or open.
   - Check the resistance of the two heater elements by measuring between pin 2 and 4 (~76 Ohms), and pin 3 and 4 (~330 Ohms), of the white five-pin connector just below the sample temperature sensor on the Bench (pin 1 is the pointed end).
2. Assuming that the $I^2C$ bus is working and that there is no other failure with the relay board, the solid-state relay (K2) on the relay board may have failed.
   - Using the BENCH_HEATER parameter under the signal I/O function, as described above, turn on and off K2 (D3 on the relay board should illuminate as the heater is turned on).
   - Check the AC voltage present between pin 2 and 4, for a 100 or 115 VAC model, and pins 3 and 4, for a 220-240 VAC model.

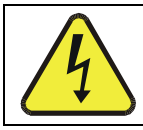

**WARNING - ELECTRICAL SHOCK HAZARD**

**Hazardous Voltages are present during this test.**

3. If the relay has failed there should be no change in the voltage across pins 2 and 4 or 3 and 4. Note: K2 is in a socket for easy replacement.
4. If K2 checks out OK, the thermistor temperature sensor located on the optical bench near the front of the instrument could be at fault.
   - Unplug the connector labeled "Bench", and measure the resistance of the thermistor.
   - At room temperature it should have approximately 30K Ohms resistance; near the 48°C set point it should have ~12K ohms.

#### 12.4.1.3. **GFC WHEEL TEMPERATURE**

Like the bench heater above there are three possible causes for the GFC Wheel temperature to have failed.

1. The wheel heater has failed.
   - Check the resistance between pins 1 and 4 on the white five-pin connector just below the sample temperature sensor on the bench (pin 1 is the pointed end).
   - It should be approximately 275 ohms.
2. Assuming that the $I^2C$ bus is working and that there is no other failure with the relay board; the solid-state relay (K1) on the relay board may have failed.
   - Using the **WHEEL_HEATER** parameter under the signal I/O function, as described above, turn on and off K1 (D2 on the relay board should illuminate as the heater is turned on).
   - Check the AC voltage present between pin 1 and 4.

**WARNING - ELECTRICAL SHOCK HAZARD**

**Hazardous Voltages are present during this test.**

3. If the relay has failed there should be no change in the voltage across pins 1 and 4.
   - K1 is socketed for easy replacement.
4. If K1 checks out OK, the thermistor temperature sensor located at the front of the filter wheel assembly may have failed.
5. Unplug the connector labeled "Wheel", and measure the resistance of the thermistor. The resistance near the 68°C set point is ~5.7k ohms.

#### 12.4.1.4. **IR PHOTO-DETECTOR TEC TEMPERATURE**

If the PHT DRIVE test parameter described in Table 11-3 is out of range there are four possible causes of failure.

1. The screws retaining the IR photo detector to the absorption bench have become loose.
   - Carefully tighten the screws, hand-tight and note whether, after the analyzer has come up to operating temperature, whether the **PHT DRIVE** voltage has returned to an acceptable level.
2. The two large transistor-type devices mounted to the side of the Absorption Bench have come loose from the bench.
   - Tighten the retaining screws and note whether there is an improvement in the **PHT DRIVE** voltage.
3. The photo-detector has failed. Contact the factory for instructions.
4. The sync demodulator circuit board has failed. Contact the factor for instructions.

## 12.4.2. **EXCESSIVE NOISE**

Noise is continuously monitored in the **TEST** functions as the **STABIL** reading and only becomes meaningful after sampling a constant gas concentration for at least 10 minutes. Compare the current **STABIL** reading with that recorded at the time of manufacture (included in the T300/T300M *Final Test and Validation Data Sheet*,P/N 04271 shipped with the unit from Teledyne API).

1. The most common cause of excessive noise is leaks. Leak check and flow check the instrument described in Section 11.3.3 and 11.3.4.
2. Detector failure – caused by failure of the hermetic seal or over-temperature due to poor heat sinking of the detector can to the optical bench.
   - In addition to increased noise due to poor signal-to-noise ratio, another indicator of detector failure is a drop in the signal levels of the **CO MEASURE** signal and **CO REFERENCE** signal.
3. Sync/Demod Board failure. There are many delicate, high impedance parts on this board. Check the **CO MEAS** and **CO REF** Test Functions via the Front Panel Display.
4. The detector cooler control circuit can fail for reasons similar to the detector itself failing. Symptoms would be a change in **MR RATIO** Test Function when zero air is being sampled.
5. Also check the SIGNAL I/O parameter **PHT DRIVE**.
   - After warm-up, and at 25$^{o}$C ambient, if **PHT DRIVE** < 4800 mV, the cooler is working properly.
   - If **PHT DRIVE** is > 4800 mV there is a malfunction.
6. The +5 and ±15 VDC voltages in the T300/T300M are provided by switching power supplies.

- Switch mode supplies create DC outputs by switching the input AC waveform at high frequencies.
- As the components in the switcher age and degrade, the main problem observed is increased noise on the DC outputs.
- If a noisy switcher power supply is suspected, attach an oscilloscope to the DC output test points located on the top right hand edge of the Relay board.
- Look for short period spikes > 100 mV p-p on the DC output

# 12.5. SUBSYSTEM CHECKOUT

The preceding subsections discussed a variety of methods for identifying possible sources of failures or performance problems within the analyzer. In most cases this included a list of possible causes. If the problem is not resolved at this point, the next step is to check the subsystems. This subsection describes how to determine whether an individual component or subsystem is the cause of the problem being investigated.

## 12.5.1. AC MAINS CONFIGURATION

The analyzer is correctly configured for the AC mains voltage in use if:

- The Sample Pump is running.
- The GFC Wheel motor is spinning. LEDs D1 & D2 (located on the sync/demod PCA) should be flashing.
- If incorrect power is suspected, check that the correct voltage and frequency is present at the line input on the rear panel.

**Note**

- **If the unit is set for 230 VAC and is plugged into 115VAC, or 100VAC the sample pump will not start, and the heaters will not come up to temperature.**
- **If the unit is set for 115 or 100 VAC and is plugged into a 230 VAC circuit, the circuit breaker built into the ON/OFF Switch on the Front Panel will trip to the OFF position immediately after power is switched on.**

## 12.5.2. DC POWER SUPPLY

If you have determined that the analyzer's AC mains power is working, but the unit is still not operating properly, there may be a problem with one of the instrument's switching power supplies. The supplies can have two faults, namely no DC output, and noisy output.

To assist tracing DC Power Supply problems, the wiring used to connect the various printed circuit assemblies and DC Powered components and the associated test points on the relay board follow a standard color-coding scheme as defined in the following table.

**Table 12-6: DC Power Test Point and Wiring Color Codes**

| NAME | TEST POINT# | TP AND WIRE COLOR |
|---|---|---|
| Dgnd | 1 | Black |
| +5V | 2 | Red |
| Agnd | 3 | Green |
| +15V | 4 | Blue |
| -15V | 5 | Yellow |
| +12R | 6 | Purple |
| +12V | 7 | Orange |

A voltmeter should be used to verify that the DC voltages are correct per the values in the table below, and an oscilloscope, in AC mode, with band limiting turned on, can be used to evaluate if the supplies are producing excessive noise (> 100 mV p-p).

**Table 12-7: DC Power Supply Acceptable Levels**

| POWER SUPPLY ASSY | VOLTAGE | CHECK RELAY BOARD TEST POINTS | | | | MIN V | MAX V |
|---|---|---|---|---|---|---|---|
| | | FROM TEST POINT | | TO TEST POINT | | | |
| | | NAME | # | NAME | # | | |
| PS1 | +5 | Dgnd | 1 | +5 | 2 | 4.8 | 5.25 |
| PS1 | +15 | Agnd | 3 | +15 | 4 | 13.5 | 16V |
| PS1 | -15 | Agnd | 3 | -15V | 5 | -14V | -16V |
| PS1 | Agnd | Agnd | 3 | Dgnd | 1 | -0.05 | 0.05 |
| PS1 | Chassis | Dgnd | 1 | Chassis | N/A | -0.05 | 0.05 |
| PS2 | +12 | +12V Ret | 6 | +12V | 7 | 11.75 | 12.5 |
| PS2 | Dgnd | +12V Ret | 6 | Dgnd | 1 | -0.05 | 0.05 |

## 12.5.3. $I^2C$ BUS

Operation of the $I^2C$ bus can be verified by observing the behavior of D1 on the relay PCA. Assuming that the DC power supplies are operating properly, the $I^2C$ bus is operating properly if D1 on the relay PCA is flashing.

## 12.5.4. TOUCHSCREEN INTERFACE

Verify the functioning of the touchscreen by observing the display when pressing a touchscreen control button. Assuming that there are no wiring problems and that the DC power supplies are operating properly, if pressing a control button on the display does not change the display, any of the following may be the problem:

- The touchscreen controller may be malfunctioning.
- The internal USB bus may be malfunctioning.

You can verify this failure by logging on to the instrument using APICOM or a terminal program to any of the communications ports. If the analyzer responds to remote commands and the display changes accordingly, the touchscreen interface may be faulty.

## 12.5.5. LCD DISPLAY MODULE

Verify the functioning of the front panel display by observing it when power is applied to the instrument. Assuming that there are no wiring problems and that the DC power supplies are operating properly, the display screen should light and show the splash screen with logo and other indications of its state as the CPU goes through its initialization process.

## 12.5.6. RELAY BOARD

The relay board PCA (P/N 04135) can be most easily checked by observing the condition of the its status LEDs on the relay board, as described in Section 12.1.4.3, and the associated output when toggled on and off through signal I/O function in the diagnostic menu, see Section 12.1.3.

1. If the front panel display responds to button presses and D1 on the relay board is NOT flashing then either the wiring between the touchscreen and the relay board is bad, or the relay board is bad.
2. If D1 on the relay board is flashing and the status indicator for the output in question (heater power, valve drive, etc.) toggles properly using the signal I/O function, then the associated control device on the relay board is bad.
   - Several of the control devices are in sockets and can be easily replaced.
   - The table below lists the control device associated with a particular function:

**Table 12-8: Relay Board Control Devices**

| FUNCTION | CONTROL DEVICE | IN SOCKET |
|---|---|---|
| Wheel Heater | K1 | Yes |
| Bench Heater | K2 | Yes |
| Spare AC Control | K3 | Yes |
| IZS Valves | U4 | Yes |
| IR Source Drive | U5 | No |

The IR source drive output can be verified by measuring the voltage at J16 with the IR source disconnected. It should be 11.5± 0.5 VDC.

# 12.5.7. SENSOR ASSEMBLY

## 12.5.7.1. SYNC/DEMODULATOR ASSEMBLY

To verify that the Sync/Demodulator Assembly is working, follow the procedure below:

1. Verify that D1 and D2 are flashing.
   - If not, check the opto pickup assembly, Section 12.5.7.3 and the GFC Wheel drive, Section 12.5.7.4.
   - If the wheel drive and opto pickup are working properly then verify that there is 2.4 ±0.1 VAC and 2.5 ±0.15 VDC between digital ground and TP 5 on the sync/demod board. If not then check the wiring between the sync/demod and opto pickup assembly (see interconnect drawing, P/N 04216). If good then the sync/demod board is bad.
2. Verify that the IR source is operating, Section 12.5.7.5.
3. With the analyzer connected to zero air, measure between TP11 (measure) and analog ground, and TP12 (reference) and analog ground.
   - If they are similar to values recorded on the factory data sheet then there is likely a problem with the wiring or the A/D converter.
   - If they are not then either the sync demodulator board or the IR-photodetector are bad. See Section 12.4.1.4 for problems with the IR-photodetector TEC drive.

## 12.5.7.2. ELECTRICAL TEST

The electric test function substitutes simulated signals for CO MEAS and CO REF, generated by circuitry on the sync/demod board, for the output of the IR photo-detector. While in this mode the user can also view the same test functions viewable from the main **SAMPLE** display. When the test is running, the concentration reported on the front panel display should be 40.0 ppm. Also see Section 5.9.4.

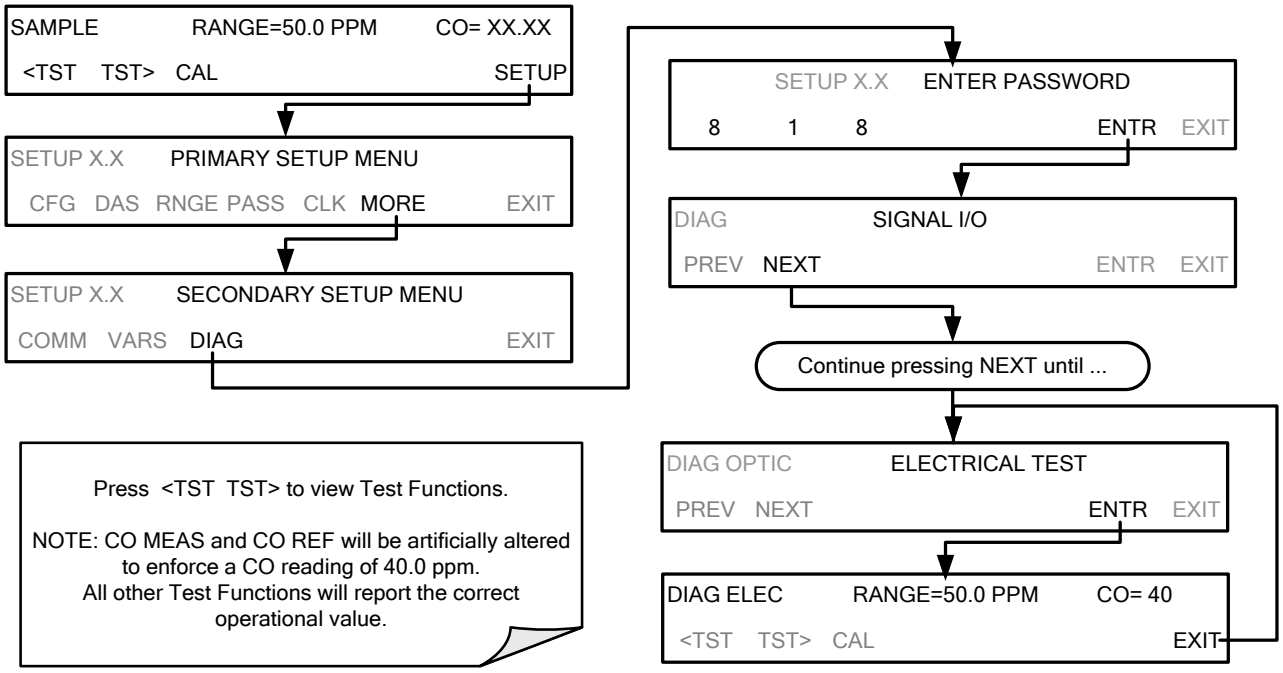

### 12.5.7.3. **OPTO PICKUP ASSEMBLY**

Operation of the opto pickup PCA (P/N 04088) can be verified with a voltmeter. Measure the AC and DC voltage between digital ground on the relay board, or touchscreen and TP2 and TP4 on the sync pickup PCA. For a working board, with the GFC motor spinning, they should read 2.4 ±0.1 VAC and 2.5 ±0.15 VDC.

Further confirmation that the pickups and motor are operating properly can be obtained by measuring the frequency at TP2 and TP4 using a frequency counter, a digital voltmeter with a frequency counter, or an oscilloscope, per Table 12-9.

**Table 12-9: Opto Pickup Board Nominal Output Frequencies**

| | Nominal Measured Frequency | |
|---|---|---|
| **AC Mains Freq.** | **TP2** | **TP4** |
| 50 Hz | 25 | 300 |
| 60 Hz | 30 | 360 |

### 12.5.7.4. **GFC WHEEL DRIVE**

If the D1 and D2 on the sync demodulator board are not flashing then:

1. Check for power to the motor by measuring between pins 1 and 3 on the connector feeding the motor.
   - For instruments configured for 120 or 220-240VAC there should be approximately 88 VAC for instruments configured for 100VAC, it should be the voltage of the AC mains, approximately 100VAC.
2. Verify that the frequency select jumper, JP4, is properly set on the relay board.
   - For 50 Hz operation it should be installed.
   - For 60 Hz operation may either be missing or installed in a vertical orientation.
3. If there is power to the motor and the frequency select jumper is properly set then the motor is likely bad.
   - See Section 12.6.2 for instructions on removing and replacing the GFC assembly that the motor is bolted to.

### 12.5.7.5. **IR SOURCE**

The IR source can be checked using the following procedure:

1. Disconnect the source and check its resistance when cold.
   - When new, the source should have a cold resistance of more than 1.5 Ohms but less than 3.5 Ohms.
   - If not, then the source is bad.
2. With the source disconnected, energize the analyzer and wait for it to start operating.
   - Measure the drive Voltage between pins 1 and 2 on the jack that the source is normally connected to; it should be 11.5 ± 0.25 VDC.
   - If not, then the problem is with the wiring, the relay board, or the +12V power supply.
3. If the drive voltage is correct in step 2, then remove the source from the heat sink assembly (2 screws on top) and connect to its mating connector.
   - Observe the light being emitted from the source.
   - It should be centered at the bottom of the U-shaped element.
   - If there is either no emission or a badly centered emission, then the source is bad.

### 12.5.7.6. **PRESSURE/FLOW SENSOR ASSEMBLY**

The pressure/flow sensor PCA, located on the top of the absorption bench, can be checked with a voltmeter using the following procedure which, assumes that the wiring is intact, and that the motherboard and the power supplies are operating properly:

1. For Pressure related problems:
   - Measure the voltage across C1 - it should be 5 ± 0.25 VDC.

If not, then the board is bad.

- Measure the voltage across TP4 and TP1.
- With the sample pump disabled it should be 4500 mV ±250 mV.
- With the pump energized it should be approximately 200 mV less.

If the voltage is incorrect, then S1, the pressure transducer is bad, the board is bad, or there is a pneumatic failure preventing the pressure transducer from sensing the absorption cell pressure properly.

2. For flow related problems:
   - Measure the voltage across TP2 and TP1 - it should be 10 ±0.25 VDC.

If not, then the board is bad.

- Measure the voltage across TP3 and TP1:
- With proper flow (800 sccm at the sample inlet) this should be approximately 4.5V (this voltage will vary with altitude).
- With flow stopped (sample inlet blocked) the voltage should be approximately 1V.

If the voltage is incorrect, the flow sensor is bad, the board is bad, or there is a leak upstream of the sensor.

# 12.5.8. **MOTHERBOARD**

## 12.5.8.1. **A/D FUNCTIONS**

The simplest method to check the operation of the A-to-D converter on the motherboard is to use the Signal I/O function under the **DIAG** menu to check the two A/D reference voltages and input signals that can be easily measured with a voltmeter.

1. Use the Signal I/O function (see Section 12.1.3 and Appendix A) to view the value of REF_4096_MV and REF_GND.
   - If both are within 3 mV of nominal (4096 and 0), and are stable, ±0.5 mV then the basic A/D is functioning properly. If not then the motherboard is bad.
2. Choose a parameter in the Signal I/O function such as SAMPLE_PRESSURE, SAMPLE_FLOW, CO_MEASURE or CO_REFERENCE.
   - Compare these voltages at their origin (see interconnect drawing, P/N 04215 and interconnect list, P/N 04216) with the voltage displayed through the signal I/O function.
   - If the wiring is intact but there is a large difference between the measured and displayed voltage (±10 mV) then the motherboard is bad.

See also Sections 5.9.1 and 12.1.3.

## 12.5.8.2. **TEST CHANNEL / ANALOG OUTPUTS VOLTAGE**

The **ANALOG OUTPUT** submenu, located under the **SETUP → MORE → DIAG** menu is used to verify that the T300/T300M Analyzer's analog outputs are working properly. The test generates a signal on functioning outputs simultaneously as shown in the following table. (See also Section 5.9.2).

**Table 12-10: Analog Output Test Function - Nominal Values Voltage Outputs**

| | | FULL SCALE OUTPUT OF VOLTAGE RANGE (see Section 5.9.3.1) | | | |
|---|---|---|---|---|---|
| | | **100MV** | **1V** | **5V** | **10V** |
| **STEP** | **%** | **NOMINAL OUTPUT VOLTAGE** | | | |
| 1 | 0 | 0 | 0 | 0 | 0 |
| 2 | 20 | 20 mV | 0.2 | 1 | 2 |
| 3 | 40 | 40 mV | 0.4 | 2 | 4 |
| 4 | 60 | 60 mV | 0.6 | 3 | 6 |
| 5 | 80 | 80 mV | 0.8 | 4 | 8 |
| 6 | 100 | 100 mV | 1.0 | 5 | 10 |

For each of the steps the output should be within 1% of the nominal value listed in the table below except for the 0% step, which should be within 0mV ±2 mV. Make sure you take into account any offset that may have been programmed into channel (see Section 5.9.3.9).

If one or more of the steps fails to be within these ranges, it is likely that there has been a failure of either or both of the DACs and their associated circuitry on the motherboard. To perform the test connect a voltmeter to the output in question and perform an analog output step test as follows:

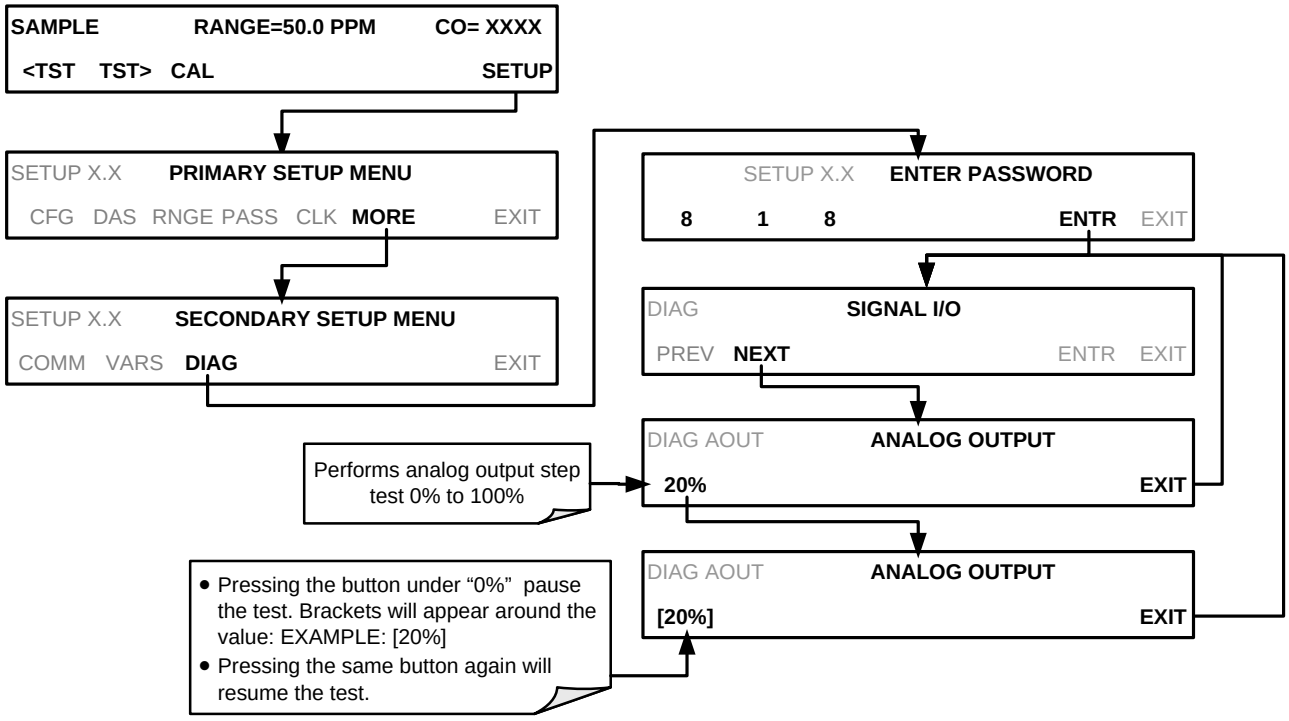


## 12.5.8.3. **ANALOG OUTPUTS: CURRENT LOOP**

To verify that the analog outputs with the optional current mode output are working properly, connect a 250 ohm resistor across the outputs and use a voltmeter to measure the output as described in Section 5.9.3.6 and then perform an analog output step test as described in Section 12.5.8.2.

For each step the output should be within 1% of the nominal value listed in the table below.

**Table 12-11: Analog Output Test Function - Nominal Values Voltage Outputs**

| | | OUTPUT RANGE | | | |
|---|---|---|---|---|---|
| | | 2 -20 | | 4 -20 | |
| | | NOMINAL OUTPUT VALUES | | | |
| STEP | % | CURRENT | V(250 OHMS) | CURRENT | V(250 OHMS) |
| 1 | 0 | 2 mA | 0.5V | 4 | 1 |
| 2 | 20 | 5.6 | 1.4 | 7.2 | 1.8 |
| 3 | 40 | 9.2 | 2.3 | 10.4 | 2.6 |
| 4 | 60 | 12.8 | 3.2 | 13.6 | 3.4 |
| 5 | 80 | 16.4 | 4.1 | 16.8 | 4.2 |
| 6 | 100 | 20 | 5 | 20 | 5 |

### 12.5.8.4. **STATUS OUTPUTS**

The procedure below can be used to test the Status outputs:

1. Connect a jumper between the "D" pin and the "▽" pin on the status output connector.
2. Connect a 1000 ohm resistor between the "+" pin and the pin for the status output that is being tested.
3. Connect a voltmeter between the "▽" pin and the pin of the output being tested (see table below).

Under the **DIAG→** SIGNAL I/O menu (see Section 12.1.3), scroll through the inputs and outputs until you get to the output in question. Alternately turn on and off the output noting the voltage on the voltmeter, it should vary between 0 volts for ON and 5 volts for OFF.

**Table 12-12: Status Outputs Check**

| PIN (LEFT TO RIGHT) | STATUS |
|---|---|
| 1 | SYSTEM OK |
| 2 | CONC VALID |
| 3 | HIGH RANGE |
| 4 | ZERO CAL |
| 5 | SPAN CAL |
| 6 | DIAG MODE |
| 7 | SPARE |
| 8 | SPARE |

### 12.5.8.5. **CONTROL INPUTS – REMOTE ZERO, SPAN**

The control input bits can be tested by the following procedure:

1. Jumper the +5 pin on the Status connector to the U on the Control In connector.
2. Connect a second jumper from the − pin on the Status connector to the A pin on the Control In connector. The instrument should switch from Sample Mode to ZERO CAL R mode.
3. Connect a second jumper from the − pin on the Status connector to the B pin on the Control In connector. The instrument should switch from Sample Mode to SPAN CAL R mode.
4. In each case, the T300/T300M should return to Sample Mode when the jumper is removed.

## 12.5.9. **CPU**

There are two major types of CPU board failures, a complete failure and a failure associated with the Disk On Module (DOM). If either of these failures occurs, contact the factory.

For complete failures, assuming that the power supplies are operating properly and the wiring is intact, the CPU is faulty if on power-on, the watchdog LED on the motherboard is not flashing.

In some rare circumstances, this failure may be caused by a bad IC on the motherboard, specifically U57, the large, 44 pin device on the lower right hand side of the board. If this is true, removing U57 from its socket will allow the instrument to start up but the measurements will be invalid.

If the analyzer stops during initialization (the front panel display shows a fault or warning message), it is likely that the DOM, the firmware or the configuration and data files have been corrupted.

## 12.5.10. **RS-232 COMMUNICATIONS**

### 12.5.10.1. **GENERAL RS-232 TROUBLESHOOTING**

Teledyne API analyzers use the RS-232 communications protocol to allow the instrument to be connected to a variety of computer-based equipment. RS-232 has been used for many years and as equipment has become more advanced, connections between various types of hardware have become increasingly difficult. Generally, every manufacturer observes the signal and timing requirements of the protocol very carefully.

Problems with RS-232 connections usually center around the following general areas:

1. Incorrect cabling and connectors. See Section 3.3 for connector and pin-out information.
2. The BAUD rate and protocol are incorrectly configured. See Section 6.2.2.
3. If a modem is being used, additional configuration and wiring rules must be observed. See Section 8.3
4. Incorrect setting of the DTE-DCE Switch. Ensure that switch is set correctly. See Section 6.1.
5. Verify that cable (P/N 03596) that connects the serial COM ports of the CPU to J12 of the motherboard is properly seated.

### 12.5.10.2. **TROUBLESHOOTING ANALYZER/MODEM OR TERMINAL OPERATION**

These are the general steps for troubleshooting problems with a modem connected to a Teledyne API analyzer.

1. Check cables for proper connection to the modem, terminal or computer.
2. Check to make sure the DTE-DCE is in the correct position as described in Section 6.1.
3. Check to make sure the set up command is correct. See Section 8.3.
4. Verify that the Ready to Send (RTS) signal is at logic high. The T300/T300M sets pin 7 (RTS) to greater than 3 volts to enable modem transmission.
5. Make sure the BAUD rate, word length, and stop bit settings between modem and analyzer match. See Section 8.3.
6. Use the RS-232 test function to send "w" characters to the modem, terminal or computer. See Section 8.3.
7. Get your terminal, modem or computer to transmit data to the analyzer (holding down the space bar is one way); the green LED should flicker as the instrument is receiving data.
8. Make sure that the communications software or terminal emulation software is functioning properly.

Further help with serial communications is available in a separate manual "RS-232 Programming Notes" Teledyne API P/N 013500000.

## 12.5.11. **THE OPTIONAL $CO_2$ SENSOR**

There are Two LEDs located on the $CO_2$ sensor PCA.

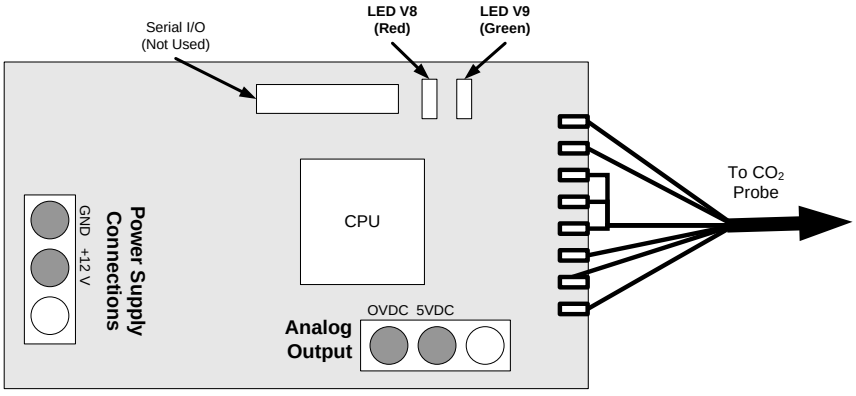


**Figure 12-13: Location of Diagnostic LEDs on$CO_2$ Sensor PCA**

- Normal Operation: V8 is not lit – V9 is Blinking
- Error State: Both LEDs are blinking.

Check to make sure that the cable to the $CO_2$ probe is properly connected.

# 12.6. REPAIR PROCEDURES

This contains procedures that might need to be performed on rare occasions when a major component of the analyzer requires repair or replacement.

## 12.6.1. REPAIRING SAMPLE FLOW CONTROL ASSEMBLY

The critical flow orifice is housed in the flow control assembly (Teledyne API P/N 001760400) located on the top of the optical bench. A sintered filter protects the jewel orifice so it is unusual for the orifice to need replacing, but if it does, or the filter needs replacement please use the following procedure (see the Spare Parts list in Appendix B for part numbers and kits):

1. Turn off power to the analyzer.
2. Locate the assembly attached to the sample pump. See Figure 3-6.
3. Disconnect the pneumatic connection from the flow assembly and the assembly from the pump.
4. Remove the fitting and the components as shown in the exploded view below.
5. Replace the o-rings (P/N OR0000001) and the sintered filter (P/N FL0000001).
6. If replacing the critical flow orifice itself (P/N 000941000), make sure that the side with the colored window (usually red) is facing upstream to the flow gas flow.
7. Apply new Teflon® tape to the male connector threads.
8. Re-assemble in reverse order.
9. After reconnecting the power and pneumatic lines, flow check the instrument as described in Section 11.3.4.

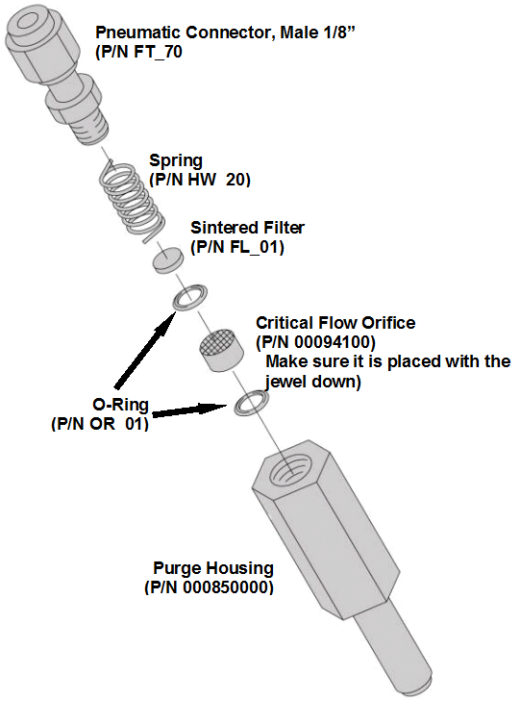


**Figure 12-14: Critical Flow Restrictor Assembly/Disassembly**

## 12.6.2. **REMOVING/REPLACING THE GFC WHEEL**

When removing or replacing the GFC Wheel it is important to perform the disassembly in the following order to avoid damaging the components:

1. Turn off the analyzer.
2. Remove the top cover.
3. Open the instrument's hinged front panel.
4. Locate the GFC Wheel/motor assembly. See Figure 3-6.
5. Unplug the following electronic components:
   - The GFC Wheel housing temperature sensor
   - GFC Wheel heater
   - GFC Wheel motor power supply

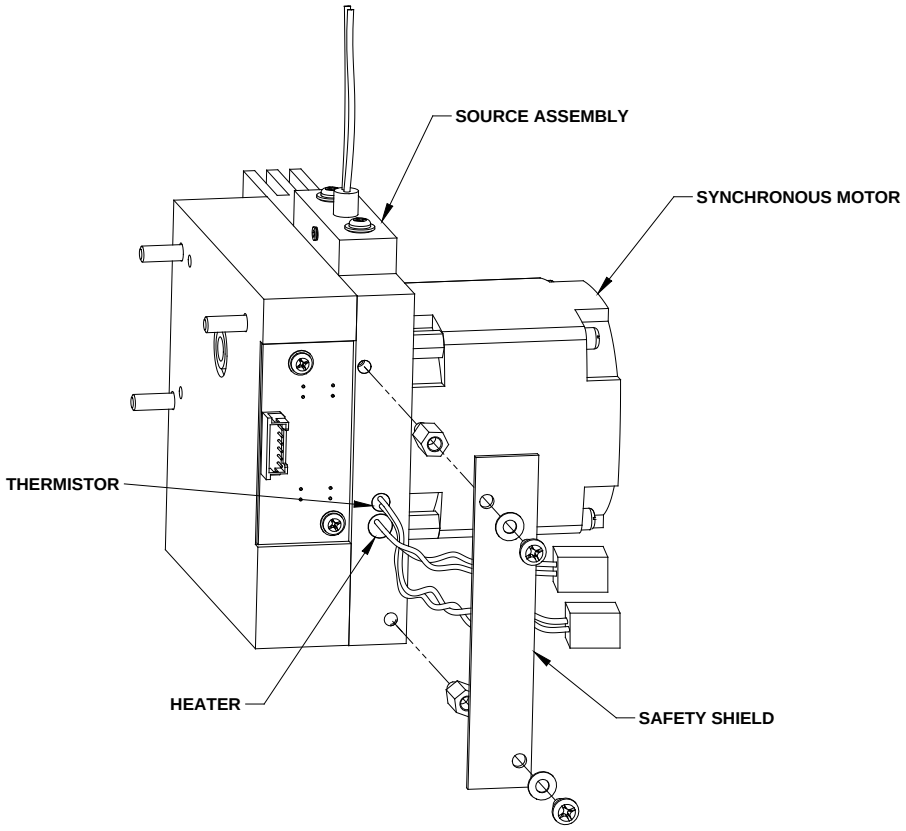


**Figure 12-15: Opening the GFC Wheel Housing**

6. Remove the two (2) screws holding the opto-pickup printed circuit assembly to the GFC Wheel housing.

7. Carefully remove the opto-pickup printed circuit assembly.

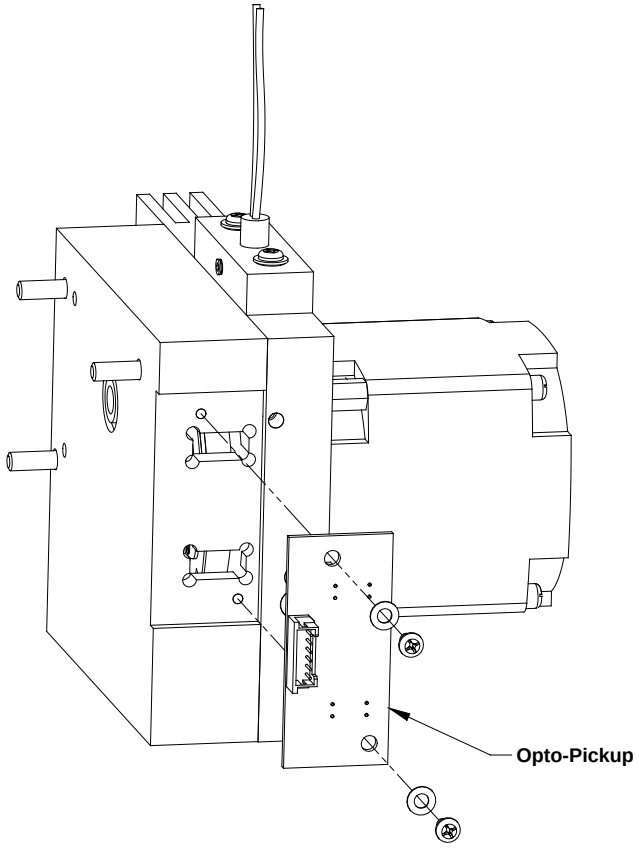


**Figure 12-16: Removing the Opto-Pickup Assembly**

8. Remove the three (3) screws holding the GFC Wheel motor/heat sink assembly to the GFC Wheel housing.
9. Carefully remove the GFC Wheel motor/heat sink assembly from the GFC Wheel housing.

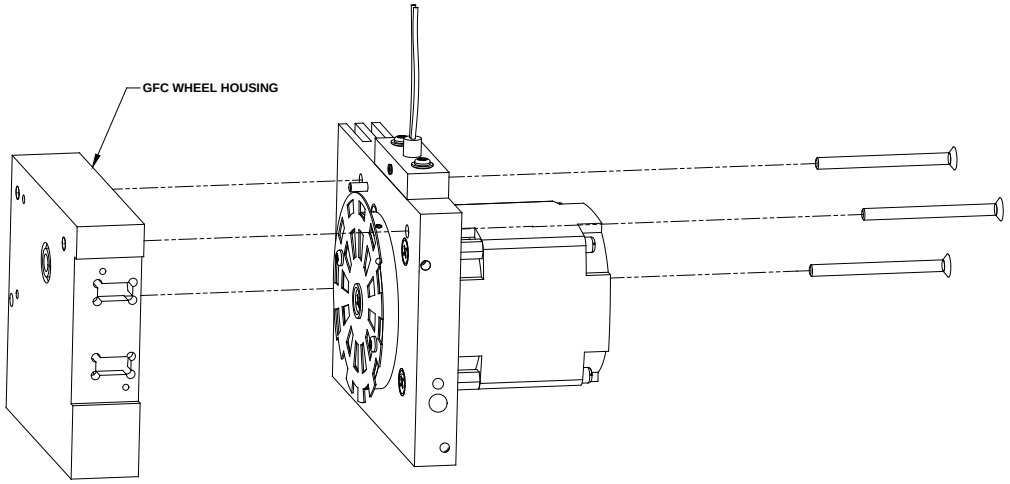


**Figure 12-17: Removing the GFC Wheel Housing**

10. Remove the one (1) screw fastening the GFC Wheel/mask assembly to the GFC motor hub.

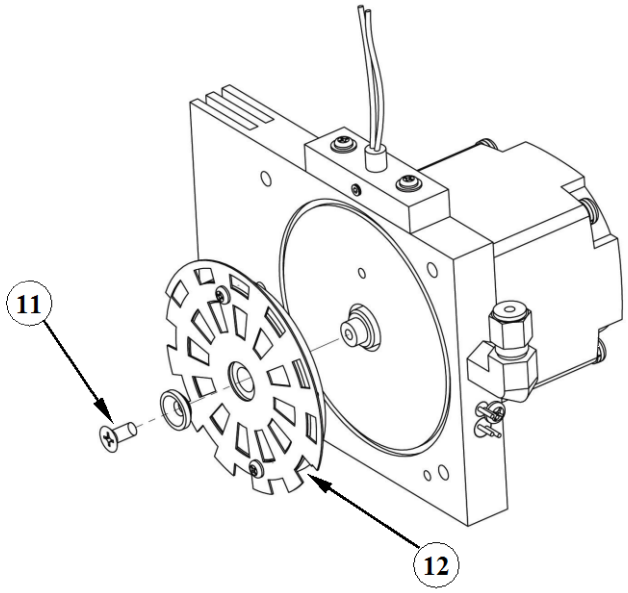


**Figure 12-18: Removing the GFC Wheel**

11. Remove the GFC Wheel/mask assembly.
12. Follow the previous steps in reverse order to put the GFC Wheel/motor assembly back together.

## 12.6.3. CHECKING AND ADJUSTING THE SYNC/DEMODULATOR, CIRCUIT GAIN (CO MEAS)

### 12.6.3.1. CHECKING THE SYNC/DEMODULATOR CIRCUIT GAIN

The T300/T300M Analyzers will operate accurately as long as the sync/demodulator circuit gain is properly adjusted. To determine if this gain factor is correct:

1. Make sure that the analyzer is turned on and warmed up.
2. Set the analyzer display to show the **STABIL** or **CO STB** test function.
3. Apply Zero Air to Sample Inlet of the analyzer.
4. Wait until the stability reading falls below 1.0 ppm.
5. Change the analyzer display to show the **CO MEAS**
   - The value of **CO MEAS** must be > 2800 mV and < 4800 mV for the instrument to operate correctly.
   - Optimal value for **CO MEAS** is 4500 mV ± 300 mV. If it is not, adjust the value.

### 12.6.3.2. **ADJUSTING THE SYNC/DEMODULATOR, CIRCUIT GAIN**

To adjust the sync/demodulator circuit gain:

1. Make sure that the analyzer is turned on and warmed up.
2. Set the analyzer display to show the **STABIL** or **CO STB** test function.
3. Apply Zero Air to Sample Inlet of the analyzer.
4. Wait until the stability reading falls below 1.0 ppm.
5. Change the analyzer display to show the **CO MEAS.**
6. Remove the Sync/Demod Housing
   - Remove the two mounting screws.
   - Carefully lift the housing to reveal the sync/demod PCA.

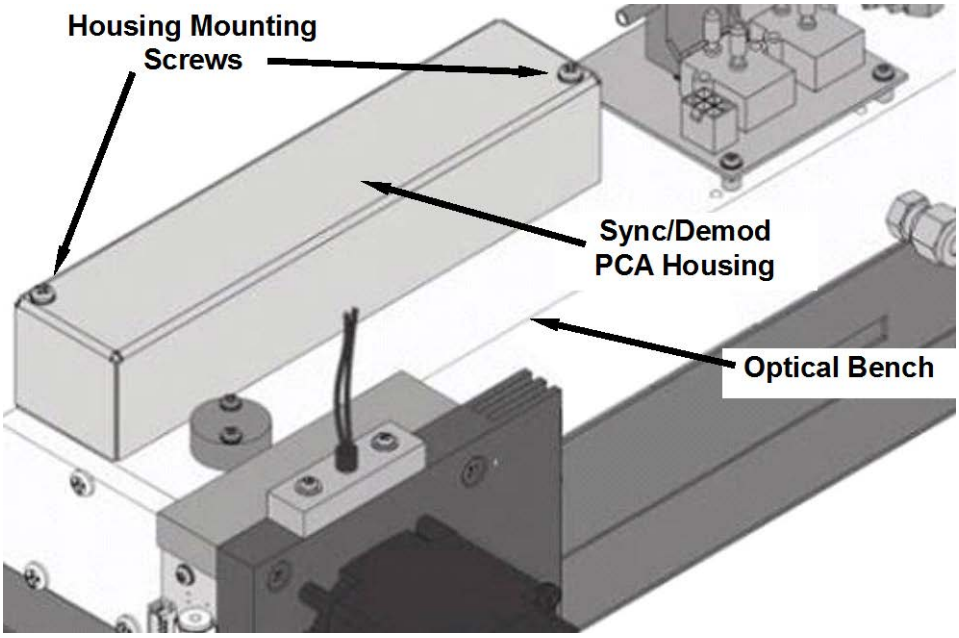


**Figure 12-19: Location of Sync/Demod Housing Mounting Screws**

7. Adjust potentiometer VR1 until **CO MEAS** reads 4500 mV ± 300 mV

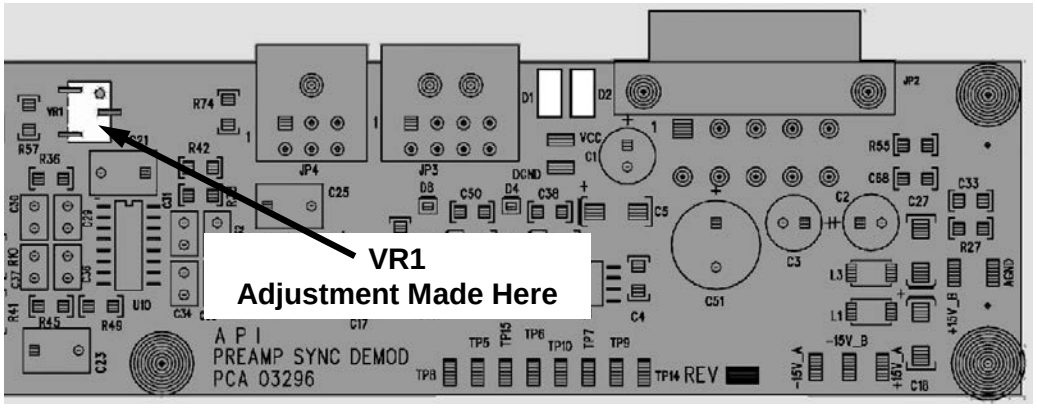


**Figure 12-20: Location of Sync/Demod Gain Potentiometer**

## 12.6.4. DISK-ON-MODULE REPLACEMENT

**ATTENTION**

**COULD DAMAGE INSTRUMENT AND VOID WARRANTY**

**Servicing of circuit components requires electrostatic discharge protection, i.e. ESD grounding straps, mats and containers. Failure to use ESD protection when working with electronic assemblies will void the instrument warranty. Refer to Section 13 for more information on preventing ESD damage.**

Replacing the Disk-on-Module (DOM) will cause loss of all DAS data; it may also cause loss of some instrument configuration parameters unless the replacement DOM carries the exact same firmware version. Whenever changing the version of installed software, the memory must be reset. Failure to ensure that memory is reset can cause the analyzer to malfunction, and invalidate measurements. After the memory is reset, the A/D converter must be re-calibrated, and all information collected in Step 1 below must be re-entered before the instrument will function correctly. Also, zero and span calibration should be performed.

1. Document all analyzer parameters that may have been changed, such as range, auto-cal, analog output, serial port and other settings before replacing the DOM
2. Turn off power to the instrument, fold down the rear panel by loosening the mounting screws.
3. When looking at the electronic circuits from the back of the analyzer, locate the Disk-on-Module in the right-most socket of the CPU board.
4. The DOM should carry a label with firmware revision, date and initials of the programmer.
5. Remove the nylon standoff clip that mounts the DOM over the CPU board, and lift the DOM off the CPU. Do not bend the connector pins.
6. Install the new Disk-on-Module, making sure the notch at the end of the chip matches the notch in the socket.
7. It may be necessary to straighten the pins somewhat to fit them into the socket. Press the chip all the way in.
8. Close the rear panel and turn on power to the machine.
9. If the replacement DOM carries a firmware revision, re-enter all of the setup information.

# 12.7. FREQUENTLY ASKED QUESTIONS

The following is a list from the Teledyne API's Customer Service Department of the most commonly asked questions relating to the T300/T300M CO Analyzer.

| QUESTION | ANSWER |
|---|---|
| Why does the **ENTR** button sometimes disappear on the Front Panel Display? | During certain types of adjustments or configuration operations, the **ENTR** button will disappear if you select a setting that is out of the allowable range for that parameter (such as trying to set the 24-hour clock to 25:00:00, or selecting a DAS hold off period of more than 20 minutes).<br>Once you adjust the setting in question to an allowable value, the **ENTR** button will re-appear. |
| Why is the **ZERO** or **SPAN** button not displayed during calibration? | The T300/T300M disables these buttons when the expected span or zero value entered by the users is too different from the gas concentration actually measured value at the time. This is to prevent the accidental recalibration of the analyzer to an out-of-range response curve.<br>EXAMPLE: The span set point is 40 ppm but gas concentration being measured is only 5 ppm.<br>For more information, see Sections 12.3.3 and 12.3.4. |
| How do I enter or change the value of my Span Gas? | Press the **CONC** button found under the **CAL** or **CALS** buttons of the main SAMPLE display menus to enter the expected CO span concentration.<br>See Section 0 for more information. |
| Why does the analyzer not respond to span gas? | There could be something wrong with a span gas tank, or a span gas concentration was entered incorrectly, or there could be a pneumatic leak. Section 12.3.3 addresses these issues. |
| Is there an optional midpoint calibration? | There is an optional mid-point linearity adjustment; however, midpoint adjustment is applicable only to applications where CO measurements are expected above 100 ppm.<br>Call Teledyne API's Customer Service Department for more information on this topic. |
| What do I do if the concentration on the instrument's front panel display does not match the value recorded or displayed on my data logger even if both instruments are properly calibrated? | This most commonly occurs for one of the following reasons:<br>• a difference in circuit ground between the analyzer and the data logger or a wiring problem<br>• a scale problem with the input to the data logger (The analog outputs of the T300/T300M can be manually adjusted to compensate for either or both of these effects, see Section 5.9.3.9).<br>• the analog outputs are not calibrated, which can happen after a firmware upgrade (Both the electronic scale and offset of the analog outputs can be adjusted; see Section 5.9.3.2. Alternately, use the data logger itself as the metering device during calibration procedures. |

| QUESTION | ANSWER |
|---|---|
| How do I perform a leak check? | Section 11.3.3 provides leak check instructions. |
| How do I measure the sample flow? | Sample flow is measured by attaching a calibrated rotameter, wet test meter, or other flow-measuring device to the sample inlet port when the instrument is operating. The sample flow should be 800 $cm^3$/min ±10%. See Section 11.3.4. |
| How long does the IR source last? | Typical lifetime is about 2-3 years. |
| Can I automate the calibration of my analyzer? | Any analyzer with zero/span valve or IZS option can be automatically calibrated using the instrument's AutoCal feature. The setup of this option is located in Section 9.4. |
| Can I use the IZS option to calibrate the analyzer? | Yes. However, whereas this may be acceptable for basic calibration checks, the IZS option is not permitted as a calibration source in applications following US EPA protocols.<br>To achieve highest accuracy, it is recommended to use cylinders of calibrated span gases in combination with a zero air source. |
| **Q:** What is the averaging time for an T300/T300M? | **A:** The default averaging time, optimized for ambient pollution monitoring, is 150 seconds for stable concentrations and 10 seconds for rapidly changing concentrations (see Section 13.5.1 for more information).<br>However, it is adjustable over a range of 0.5 second to 200 seconds (please contact Customer Service for more information). |

# 12.8. TECHNICAL ASSISTANCE

If this manual and its troubleshooting / repair sections do not solve your problems, technical assistance may be obtained from:

**Teledyne API Technical Support**
**9970 Carroll Canyon Road**
**San Diego, California 92131-1106 USA**

**Toll-free Phone:** 800-324-5190
**Phone:** +1 858-657-9800
**Fax:** +1 858-657-9816
**Email:** Sda_techsupport@teledyne.com
**Website:** http://www.teledyne-api.com/

Before contacting Teledyne API Tech Support, please fill out the problem report form in Appendix C, which is also available online for electronic submission at http://www.teledyne-api.com/forms/.

# 13. THEORY OF OPERATION

The T300/T300M Gas Filter Correlation Carbon monoxide Analyzer is a microprocessor-controlled analyzer that determines the concentration of carbon monoxide (CO) in a sample gas drawn through the instrument. It requires that the sample and calibration gases be supplied at ambient atmospheric pressure in order to establish a stable gas flow through the sample chamber where the gases ability to absorb infrared radiation is measured.

Calibration of the instrument is performed in software and does not require physical adjustments to the instrument. During calibration, the microprocessor measures the current state of the IR Sensor output and various other physical parameters of the instrument and stores them in memory.

The microprocessor uses these calibration values, the IR absorption measurements made on the sample gas along with data regarding the current temperature and pressure of the gas to calculate a final CO concentration.

This concentration value and the original information from which it was calculated are stored in one of the unit's internal data acquisition system (DAS - See Sections 7) as well as reported to the user via front panel display display or a variety of digital and analog signal outputs.

## 13.1. MEASUREMENT METHOD

This section presents measurement principles and fundamentals for this instrument.

### 13.1.1. BEER'S LAW

The basic principle by which the analyzer works is called the Beer-Lambert Law or Beer's Law. It defines how light of a specific wavelength is absorbed by a particular gas molecule over a certain distance. The mathematical relationship between these three parameters is:

$$I = I_o \, e^{-\alpha L C}$$

Equation 13-1

Where:

$I_o$ is the intensity of the light if there was no absorption.

$I$ is the intensity with absorption.

$L$ is the absorption path, or the distance the light travels as it is being absorbed.

$C$ is the concentration of the absorbing gas; in the case of the T300/T300M, Carbon Monoxide (CO).

$\alpha$ is the absorption coefficient that tells how well CO absorbs light at the specific wavelength of interest.

## 13.2. MEASUREMENT FUNDAMENTALS

In the most basic terms, the T300/T300M uses a high-energy heated element to generate a beam of broad-band IR light with a known intensity (measured during instrument calibration). This beam is directed through multi-pass cell filled with sample gas. The sample cell uses mirrors at each end to reflect the IR beam back and forth through the sample gas a number of times (see Figure 13-1).

The total length that the reflected light travels is directly related to the intended sensitivity of the instrument. The lower the concentrations the instrument is designed to detect, the longer the light path must be in order to create detectable levels of attenuation.

Lengthening the absorption path is accomplished partly by making the physical dimension of the reaction cell longer, but primarily by adding extra passes back and forth along the length of the chamber.

**Table 13-1: Absorption Path Lengths for T300 and T300M**

| MODEL | TOTAL NUMBER OF REFLECTIVE PASSES | DISTANCE BETWEEN MIRRORS | TOTAL ABSORPTION LIGHT PATH |
|---|---|---|---|
| T300 | 32 | 437.5 mm | 14 Meters |
| T300M | 8 | 312.5 mm | 2.5 Meters |

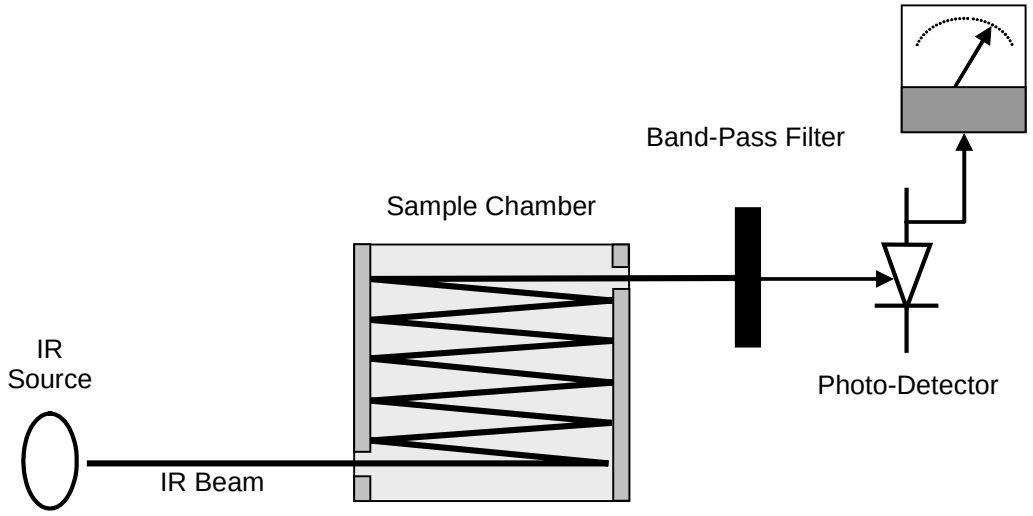


**Figure 13-1: Measurement Fundamentals**

Upon exiting the sample cell, the beam shines through a band-pass filter that allows only light at a wavelength of 4.7 µm to pass. Finally, the beam strikes a solid-state photo-detector that converts the light signal into a modulated voltage signal representing the attenuated intensity of the beam.

## 13.2.1. GAS FILTER CORRELATION

Unfortunately, water vapor absorbs light at 4.7 µm too. To overcome the interfering effects of water vapor the T300/T300M adds another component to the IR light path called a Gas Filter Correlation (GFC) Wheel.

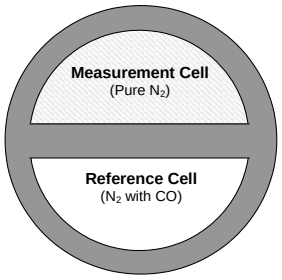


**Figure 13-2: GFC Wheel**

### 13.2.1.1. THE GFC WHEEL

A GFC Wheel is a metallic wheel into which two chambers are carved. The chambers are sealed on both sides with material transparent to 4.7 µm IR radiation creating two airtight cavities. Each cavity is mainly filled with composed gases. One cell is filled with pure $N_2$ (the measurement cell). The other is filled with a combination of $N_2$ and a high concentration of CO (the reference cell).

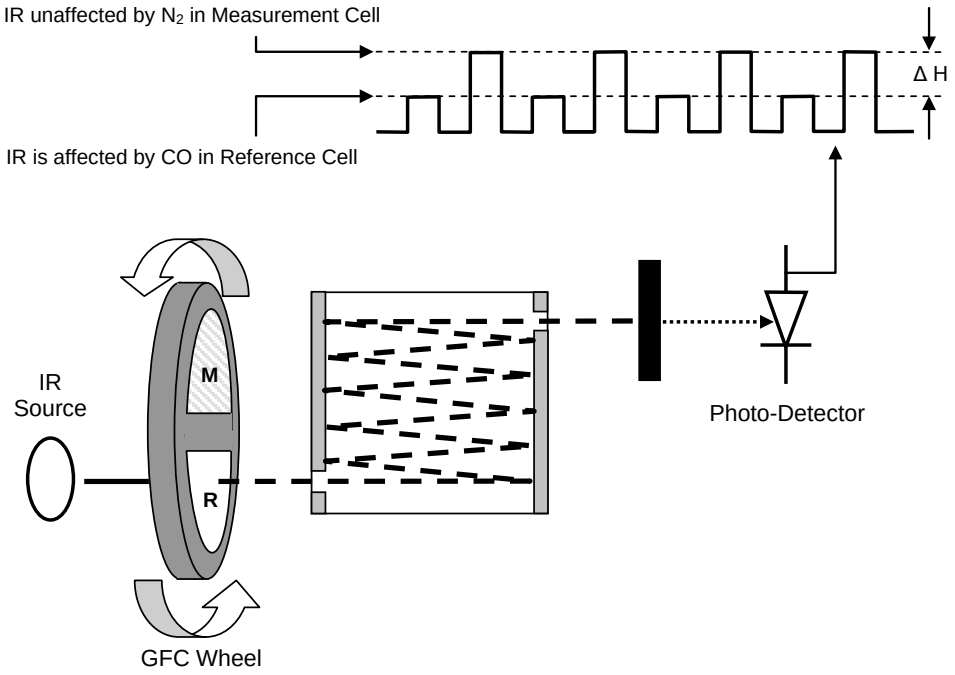


**Figure 13-3: Measurement Fundamentals with GFC Wheel**

As the GFC Wheel spins, the IR light alternately passes through the two cavities. When the beam is exposed to the reference cell, the CO in the gas filter wheel strips the beam of most of the IR at 4.7µm. When the light beam is exposed to the measurement cell, the $N_2$ in the filter wheel does not absorb IR light. This causes a fluctuation in the intensity of the IR light striking the photo-detector which results in the output of the detector resembling a square wave.

### 13.2.1.2. THE MEASURE REFERENCE RATIO

The T300/T300M determines the amount of CO in the sample chamber by computing the ratio between the peak of the measurement pulse (**CO MEAS**) and the peak of the reference pulse (**CO REF**).

If no gases exist in the sample chamber that absorb light at 4.7µm, the high concentration of CO in the gas mixture of the reference cell will attenuate the intensity of the IR beam by 60% giving a M/R ratio of approximately 2.4:1.

Adding CO to the sample chamber causes the peaks corresponding to both cells to be attenuated by a further percentage. Since the intensity of the light passing through the measurement cell is greater, the effect of this additional attenuation is greater. This causes **CO MEAS** to be more sensitive to the presence of CO in the sample chamber than **CO REF** and the ratio between them (M/R) to move closer to 1:1 as the concentration of CO in the sample chamber increases.

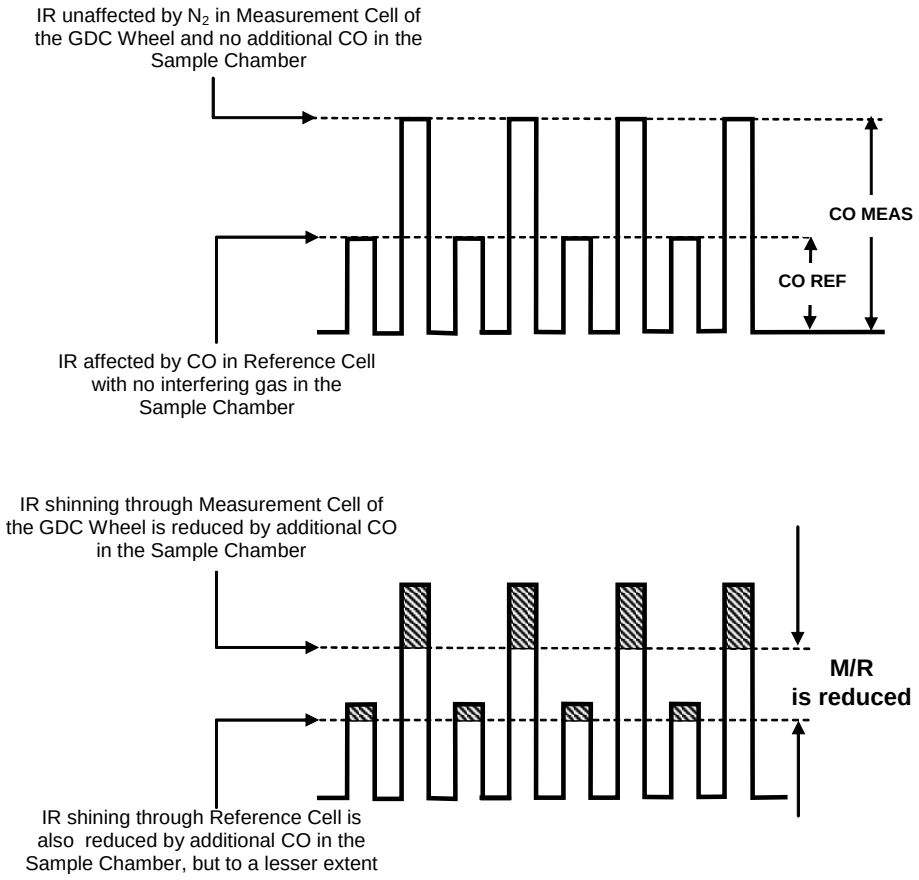


**Figure 13-4: Affect of CO in the Sample on CO MEAS & CO REF**

Once the T300/T300M has computed this ratio, a look-up table is used, with interpolation, to linearize the response of the instrument. This linearized concentration value is combined with calibration SLOPE and OFFSET values to produce the CO concentration which is then normalized for changes in sample pressure.

### INTERFERENCE AND SIGNAL TO NOISE REJECTION

If an interfering gas, such as $H_2O$ vapor is introduced into the sample chamber, the spectrum of the IR beam is changed in a way that is identical for both the reference and the measurement cells, but without changing the ratio between the peak heights of **CO MEAS** and **CO REF**. In effect, the difference between the peak heights remains the same.

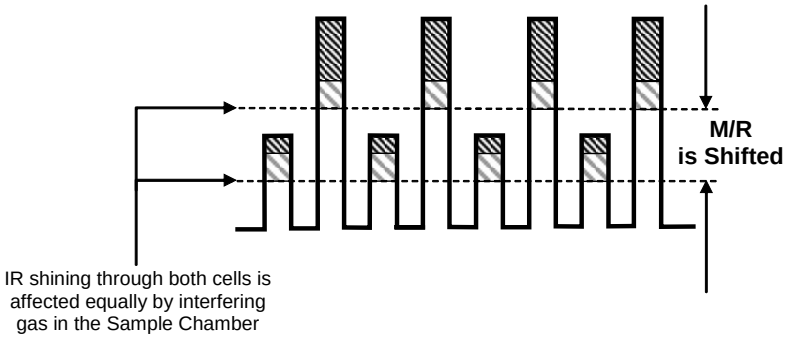


**Figure 13-5: Effects of Interfering Gas on CO MEAS & CO REF**

Thus, the difference in the peak heights and the resulting M/R ratio is only due to CO and not to interfering gases. In this case, GFC rejects the effects of interfering gases and so that the analyzer responds only to the presence of CO.

To improve the signal-to-noise performance of the IR photo-detector, the GFC Wheel also incorporates an optical mask that chops the IR beam into alternating pulses of light and dark at six times the frequency of the measure/reference signal. This limits the detection bandwidth helping to reject interfering signals from outside this bandwidth improving the signal to noise ratio.

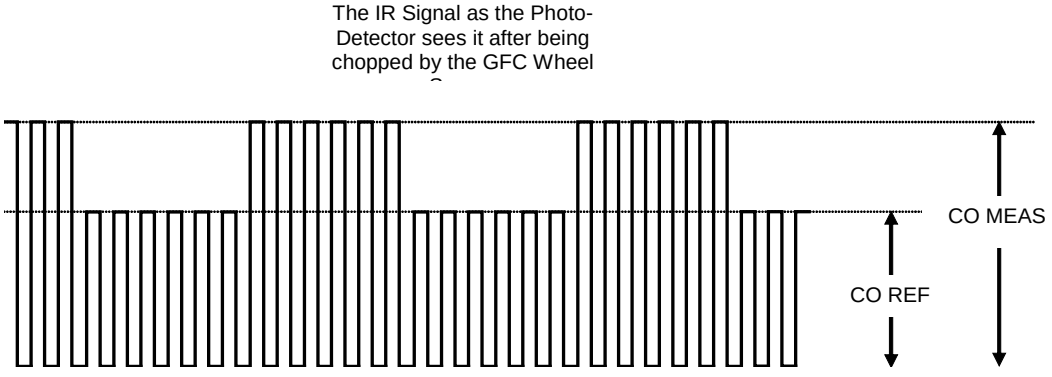


**Figure 13-6: Chopped IR Signal**

### 13.2.1.3. **SUMMARY INTERFERENCE REJECTION**

The basic design of the T300/T300M rejects most of this interference at a 300:1 ratio. The two primary methods used to accomplish this are:

- The 4.7µm band pass filter just before the IR sensor which allows the instrument to only react to IR absorption in the wavelength affected by CO.
- Comparison of the measure and reference signals and extraction of the ratio between them.
- Pneumatic Operation

**CAUTION – GENERAL SAFETY HAZARD**

**It is important that the sample airflow system is both leak tight and not pressurized over ambient pressure.**

**Regular leak checks should be performed on the analyzer as described in the maintenance schedule, Table 11-1.**

**Procedures for correctly performing leak checks can be found in Section 11.3.3.**

An internal pump evacuates the sample chamber creating a small vacuum that draws sample gas into the analyzer. Normally the analyzer is operated with its inlet near ambient pressure either because the sample is directly drawn at the inlet or a small vent is installed at the inlet. There are several advantages to this "pull through" configuration.

- By placing the pump down stream from the sample chamber several problems are avoided.
- First the pumping process heats and compresses the sample air complicating the measurement process.
- Additionally, certain physical parts of the pump itself are made of materials that might chemically react with the sample gas.
- Finally, in certain applications where the concentration of the target gas might be high enough to be hazardous, maintaining a negative gas pressure relative to ambient means that should a minor leak occur, no sample gas will be pumped into the atmosphere surrounding analyzer.

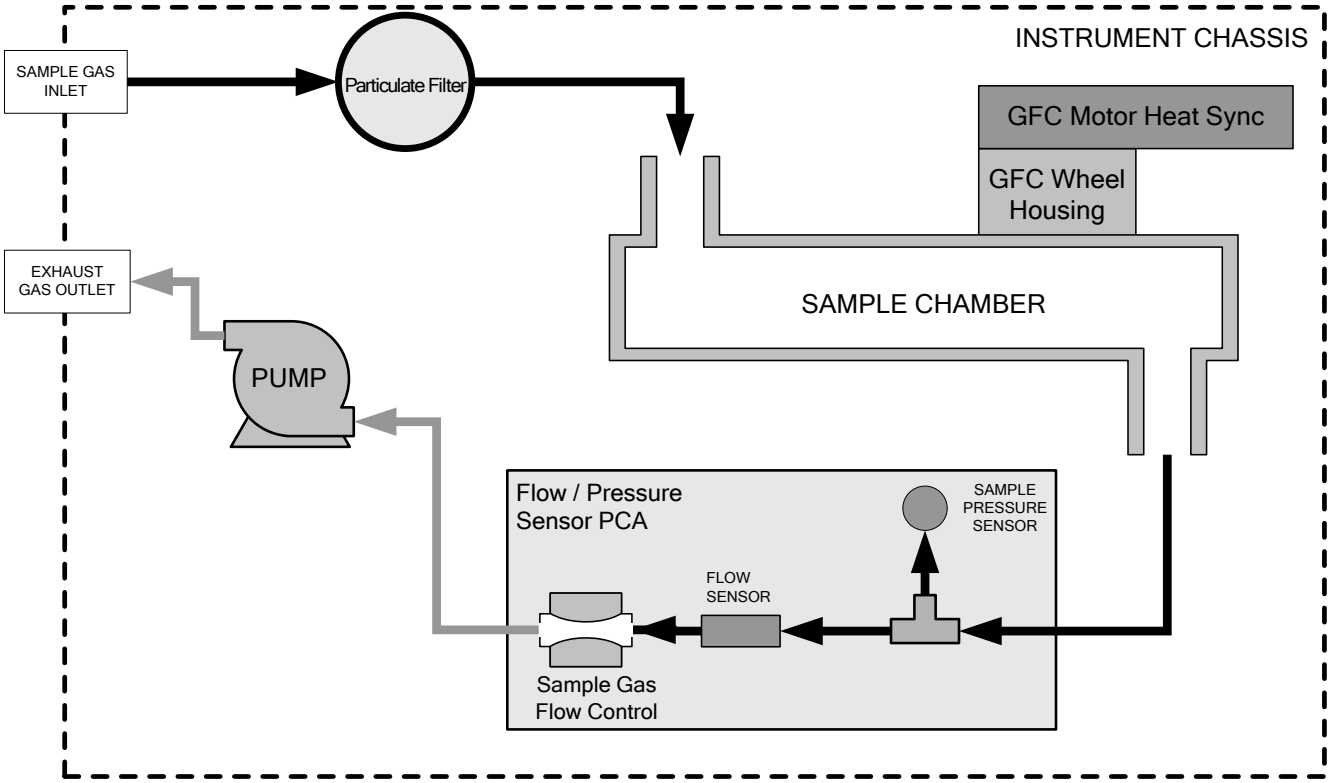


**Figure 13-7: Internal Pneumatic Flow – Basic Configuration**

# 13.3. FLOW RATE CONTROL

To maintain a constant flow rate of the sample gas through the instrument, the T300/T300M uses a special flow control assembly located in the exhaust gas line just before the pump. In instruments with the $O_2$ sensor installed, a second flow control assembly is located between the $O_2$ sensor assembly and the pump. These assemblies consist of:

- A critical flow orifice.
- Two o-rings: Located just before and after the critical flow orifice, the o-rings seal the gap between the walls of assembly housing and the critical flow orifice.
- A spring: Applies mechanical force needed to form the seal between the o-rings, the critical flow orifice and the assembly housing.

### 13.3.1.1. **CRITICAL FLOW ORIFICE**

The most important component of this flow control assembly is the critical flow orifice.

Critical flow orifices are a remarkably simple way to regulate stable gas flow rates. They operate without moving parts by taking advantage of the laws of fluid dynamics. By restricting the flow of gas though the orifice, a pressure differential is created. This pressure differential combined with the action of the analyzer's pump draws the gas through the orifice.

As the pressure on the downstream side of the orifice (the pump side) continues to drop, the speed that the gas flows through the orifice continues to rise. Once the ratio of upstream pressure to downstream pressure is greater than 2:1, the velocity of the gas through the orifice reaches the speed of sound. As long as that ratio stays at least 2:1, the gas flow rate is unaffected by any fluctuations, surges, or changes in downstream pressure because such variations only travel at the speed of sound themselves and are therefore cancelled out by the sonic shockwave at the downstream exit of the critical flow orifice.

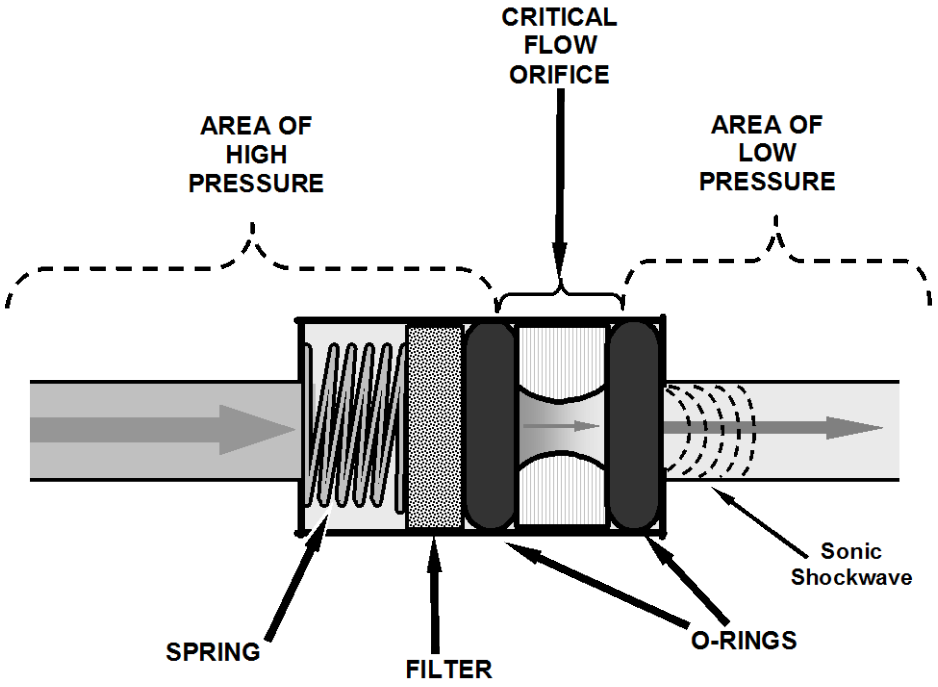


**Figure 13-8: Flow Control Assembly & Critical Flow Orifice**

The actual flow rate of gas through the orifice (volume of gas per unit of time), depends on the size and shape of the aperture in the orifice. The larger the hole, the more the gas molecules move at the speed of sound and pass through the orifice. Because the flow rate of gas through the orifice is only related to the minimum 2:1 pressure differential and not absolute pressure, the flow rate of the gas is also unaffected by degradations in pump efficiency due to age.

The critical flow orifice used in the T300/T300M is designed to provide a flow rate of 800 cc/min.

### 13.3.2. PARTICULATE FILTER

The T300/T300M Analyzer comes equipped with a 47 mm diameter, Teflon, particulate filter with a 5 micron pore size. The filter is accessible through the front panel, which folds down to allow access, and should be changed according to the suggested maintenance schedule described in Table 11-1.

### 13.3.3. PNEUMATIC SENSORS

There are two pneumatic sensors: one each to measure sample pressure and flow.

#### 13.3.3.1. SAMPLE PRESSURE SENSOR

An absolute value pressure transducer plumbed to the outlet of the sample chamber is used to measure sample pressure. The output of the sensor is used to compensate the concentration measurement for changes in air pressure. This sensor is mounted to a printed circuit board with the Sample Flow Sensor on the sample chamber (see Section 13.3.3.2 and Figure 3-4).

#### 13.3.3.2. SAMPLE FLOW SENSOR

A thermal-mass flow sensor is used to measure the sample flow through the analyzer. The sensor is calibrated at the factory with ambient air or $N_2$, but can be calibrated to operate with samples consisting of other gases such as CO. This sensor is mounted to a printed circuit board with the Sample Pressure Sensor on the sample chamber (see Section 13.3.3.1 and Figure 3-4).

## 13.4. ELECTRONIC OPERATION

Figure 13-9 shows a block diagram of the major electronic components of the analyzer.

The core of the analyzer is a microcomputer/central processing unit (CPU) that controls various internal processes, interprets data, makes calculations, and reports results using specialized firmware developed by Teledyne API. It communicates with the user as well as receives data from and issues commands to a variety of peripheral devices via a separate printed circuit assembly called the motherboard.

The motherboard is directly mounted to the inside rear panel and collects data, performs signal conditioning duties and routes incoming and outgoing signals between the CPU and the analyzer's other major components.

Data are generated by a gas-filter-correlation optical bench which outputs an analog signal corresponding to the concentration of CO in the sample gas. This analog signal is transformed into two, pre-amplified, DC voltages (**CO MEAS** and **CO REF**) by a synchronous demodulator printed circuit assembly. **CO MEAS** and **CO REF** are converted into digital data by a unipolar, analog-to-digital converter, located on the motherboard.

A variety of sensors report the physical and operational status of the analyzer's major components, again through the signal processing capabilities of the motherboard. These status reports are used as data for the CO concentration calculation and as trigger events for certain control commands issued by the CPU. This information is stored in memory by the CPU and in most cases can be viewed but the user via the front panel display.

The CPU issues commands via a series of relays and switches (also over the $I^2C$ bus) located on a separate printed circuit assembly to control the function of key electromechanical devices such as heaters, motors and valves.

The CPU communicates with the user and the outside world in several ways:

- Through the analyzer's front panel LCD touch-screen interface
- RS-232 and RS-485 serial I/O channels
- Various analog voltage and current outputs
- Several digital I/O channels
- Ethernet

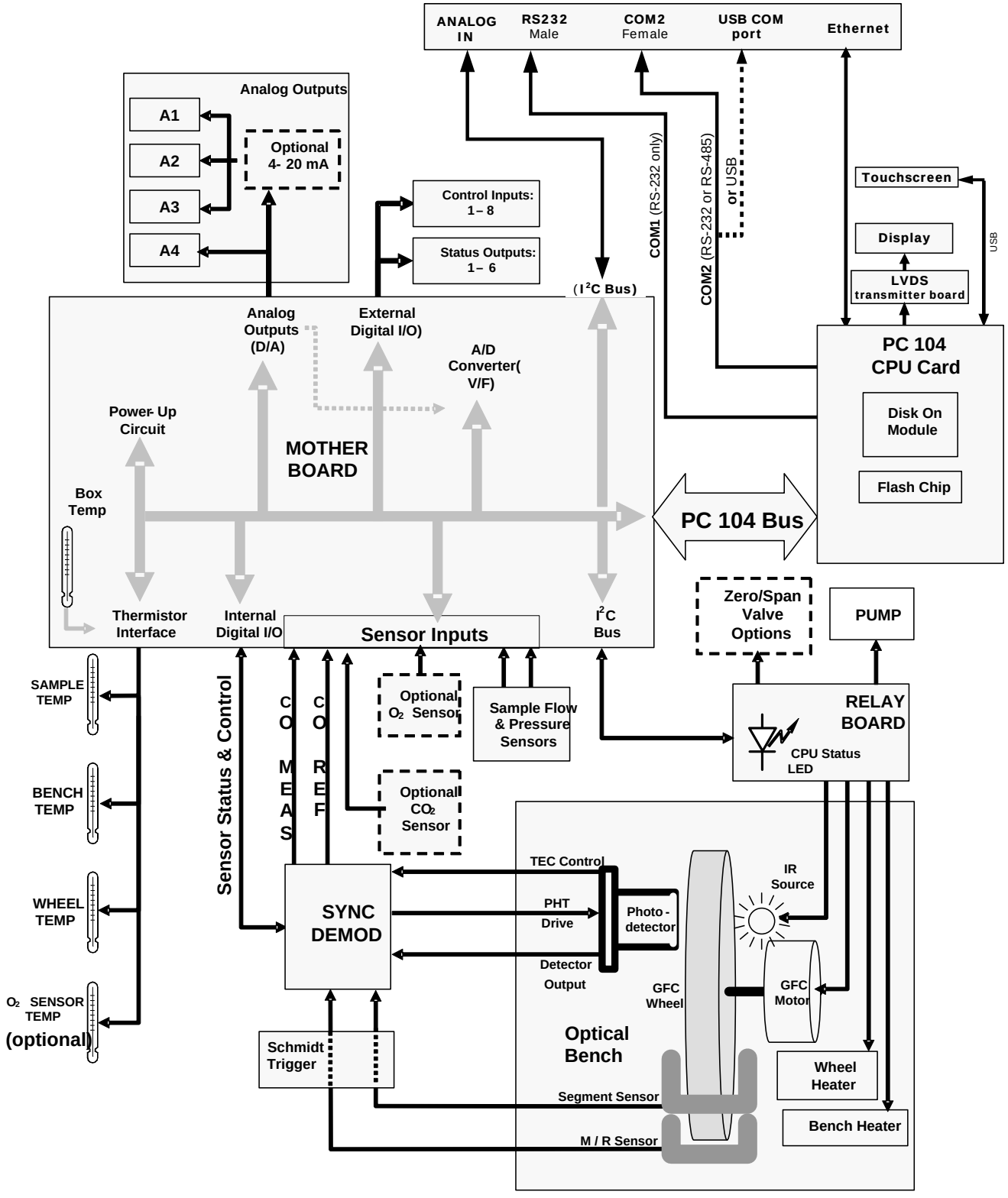


**Figure 13-9: Electronic Block Diagram**

## 13.4.1. **CPU**

The unit's CPU card is installed on the motherboard located inside the rear panel. It is a low power (5 VDC, 720mA max), high performance, Vortex 86SX-based microcomputer running Windows CE. Its operation and assembly conform to the PC/104 specification.

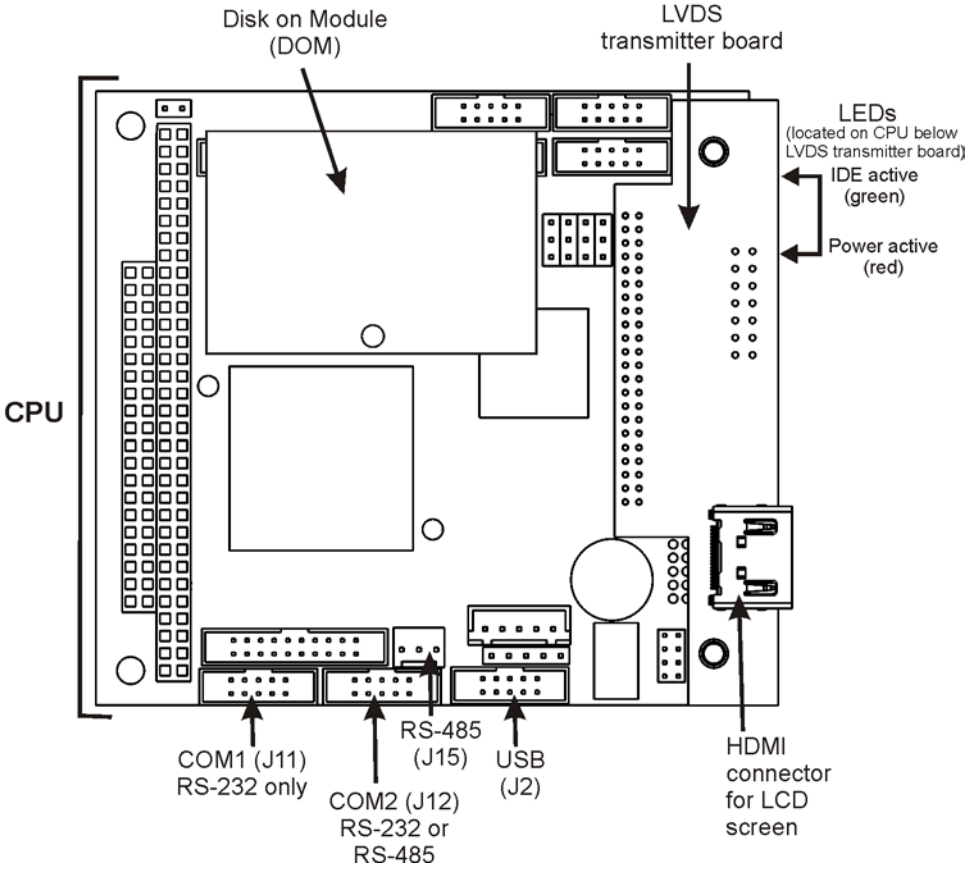


**Figure 13-10. CPU Board**

The CPU includes two types of non-volatile data storage: a Disk-On-Module (DOM) and an embedded flash chip.

### 13.4.1.1. **DISK-ON-MODULE (DOM)**

The DOM is a 44-pin IDE flash drive with a storage capacity up to 128 MB. It is used to store the computer's operating system, the Teledyne API firmware, and most of the operational data generated by the analyzer's internal data acquisition system (DAS).

### 13.4.1.2. **FLASH CHIP**

This non-volatile, embedded flash chip includes 2MB of storage for calibration data as well as a backup of the analyzer configuration. Storing these key data on a less heavily accessed chip significantly decreases the chance of data corruption.

In the unlikely event that the flash chip should fail, the analyzer will continue to operate with just the DOM. However, all configuration information will be lost, requiring that the unit be recalibrated.

## 13.4.2. OPTICAL BENCH & GFC WHEEL

Electronically, in the case of the optical bench for the T300 Analyzer, GFC Wheel and associated components do more than simply measure the amount of CO present in the sample chamber. A variety of other critical functions are performed here as well.

### 13.4.2.1. TEMPERATURE CONTROL

Because the temperature of a gas affects its density resulting in the amount of light absorbed by that gas, it is important to reduce the effect of fluctuations in ambient temperature on the T300's measurement of CO for the T300 Analyzer. To accomplish this both the temperature of the sample chamber and the GFC Wheel are maintained at constant temperatures above their normal operating ranges.

#### BENCH TEMPERATURE

To minimize the effects of ambient temperature variations on the sample measurement, the sample chamber is heated to 48°C (8 degrees above the maximum suggested ambient operating temperature for the analyzer). A strip heater attached to the underside of the chamber housing is the heat source. The temperature of the sample chamber is sensed by a thermistor, also attached to the sample chamber housing.

#### WHEEL TEMPERATURE

To minimize the effects of temperature variations caused by the near proximity of the IR Source to the GFC Wheel on the gases contained in the wheel, it is also raised to a high temperature level. Because the IR Source itself is very hot, the set point for this heat circuit is 68°C. A cartridge heater implanted into the heat sync on the motor is the heat source. The temperature of the wheel/motor assembly is sensed by a thermistor also inserted into the heat sync.

Both heaters operate off of the AC line voltage supplied to the instrument.

### 13.4.2.2. IR SOURCE

The light used to detect CO in the sample chamber is generated by an element heated to approximately 1100°C producing infrared radiation across a broad band. This radiation is optically filtered after it has passed through the GFC Wheel and the sample chamber and just before it reaches the photo-detector to eliminate all black body radiation and other extraneous IR emitted by the various components of those components.

### 13.4.2.3. GFC WHEEL

A synchronous AC motor turns the GFC Wheel motor. For analyzers operating on 60Hz line power this motor turns at 1800 rpm. For those operating on 50Hz line power the spin rate is 1500 rpm. The actual spin rate is unimportant within a large range since a phase lock loop circuit is used to generate timing pulses for signal processing.

In order to accurately interpret the fluctuations of the IR beam after it has passed through the sample gas, the GFC Wheel several other timing signals are produced by

other photo emitters/detectors. These devices consist of a combination LED and detector mounted so that the light emitted by the LED shines through the same mask on the GFC Wheel that chops the IR beam.

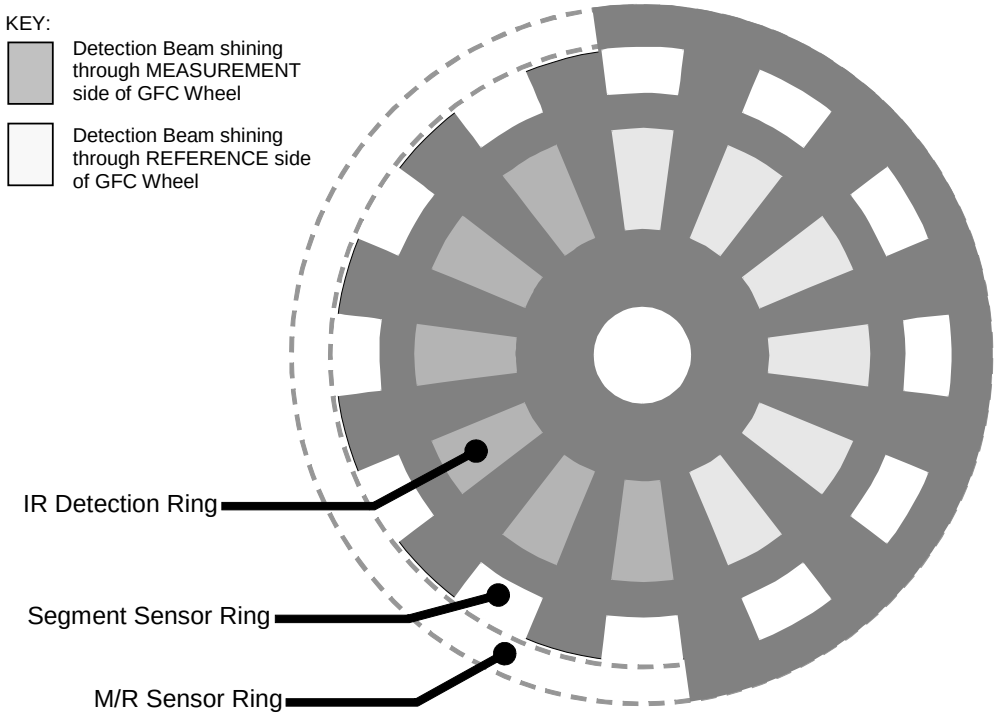


**Figure 13-11: GFC Light Mask**

### M/R SENSOR

This emitter/detector assembly produces a signal that shines through a portion of the mask that allows light to pass for half of a full revolution of the wheel. The resulting light signal tells the analyzer whether the IR beam is shining through the measurement or the reference side of the GFC Wheel.

### SEGMENT SENSOR

Light from this emitter/detector pair shines through a portion of the mask that is divided into the same number of segments as the IR detector ring. It is used by the synchronous/demodulation circuitry of the analyzer to latch onto the most stable part of each measurement and reference IR pulse.

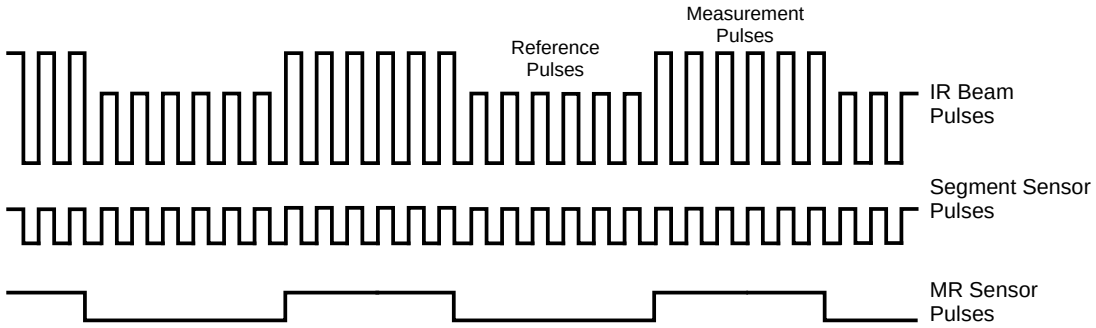


**Figure 13-12: Segment Sensor and M/R Sensor Output**

#### SCHMIDT TRIGGERS

To ensure that the waveforms produced by the Segment Sensor and the M/R Sensor are properly shaped and clean, these signals are passed through a set of Schmidt Triggers circuits.

### 13.4.2.4. IR PHOTO-DETECTOR

The IR beam is converted into an electrical signal by a cooled solid-state photo-conductive detector. The detector is composed of a narrow-band optical filter, a piece of lead-salt crystal whose electrical resistance changes with temperature, and a two-stage thermo-electric cooler.

When the analyzer is on, a constant electrical current is directed through the detector. The IR beam is focused onto the detector surface, raising its temperature and lowering its electrical resistance that results in a change in the voltage drop across the detector.

During those times that the IR beam is bright, the temperature of the detector is high; the resistance of the detector is correspondingly low and its output voltage output is low. During those times when the IR beam intensity is low or completely blocked by the GFC Wheel mask, the temperature of the detector is lowered by the two-stage thermo-electric cooler, increasing the detector's resistance and raising the output voltage.

## 13.4.3. SYNCHRONOUS DEMODULATOR (SYNC/DEMOD) ASSEMBLY

While the photo-detector converts fluctuations of the IR beam into electronic signals, the Sync/Demod Board amplifies these signals and converts them into usable information. Initially the output by the photo-detector is a complex and continuously changing waveform made up of Measure and Reference pulses. The sync/demod board demodulates this waveform and outputs two analog DC voltage signals, corresponding to the peak values of these pulses. **CO MEAS** and **CO REF** are converted into digital signals by circuitry on the motherboard then used by the CPU to calculate the CO concentration of the sample gas.

Additionally the synch/demod board contains circuitry that controls the photo-detector's thermoelectric cooler as well as circuitry for performing certain diagnostic tests on the analyzer.

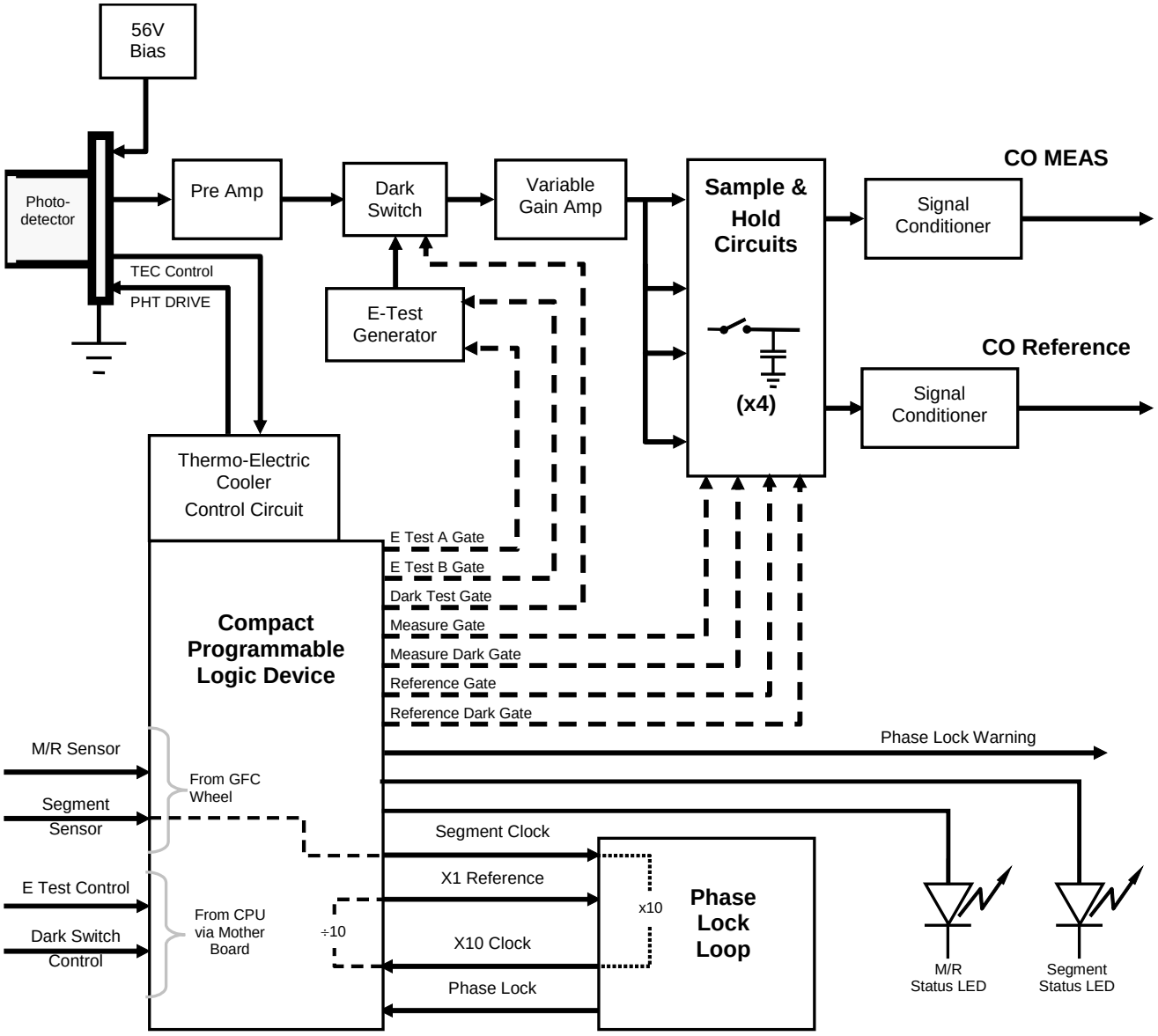


**Figure 13-13: T300/T300M Sync/Demod Block Diagram**

### 13.4.3.1. **SIGNAL SYNCHRONIZATION AND DEMODULATION**

The signal emitted by the IR photo-detector goes through several stages of amplification before it can be accurately demodulated. The first is a pre-amplification stage that raises the signal to levels readable by the rest of the sync/demod board circuitry. The second is a variable amplification stage that is adjusted at the factory to compensate for performance variations of mirrors, detectors, and other components of the optical bench from instrument to instrument.

The workhorses of the sync/demod board are the four sample-and-hold circuits that capture various voltage levels found in the amplified detector signal needed to determine the value of **CO MEAS** and **CO REF**. They are activated by logic signals under the control of a compact Programmable Logic Device (PLD), which in turn responds to the output of the Segment Sensor and M/R Sensor as shown in Figure 13-9.

The four sample and hold circuits are designated as follows:

**Table 13-2: Sync DEMOD Sample and Hold Circuits**

| Designation | Active When: | |
|---|---|---|
| | IR BEAM PASSING THROUGH | Segment Sensor Pulse is: |
| Measure Gate | MEASUREMENT cell of GFC Wheel | HIGH |
| Measure Dark Gate | MEASUREMENT Cell of GFC Wheel | LOW |
| Reference Gate | REFERENCE cell of GFC Wheel | HIGH |
| Reference Dark Gate | REFERENCE cell of GFC Wheel | LOW |

Timing for activating the Sample and Hold Circuits is provided by a Phase Lock Loop (PLL) circuit. Using the segment sensor output as a reference signal the PLL generates clock signal at ten times that frequency. This faster clock signal is used by the PLD to make the Sample and Hold Circuits capture the signal during the center portions of the detected waveform, ignore the rising and falling edges of the detector signal.

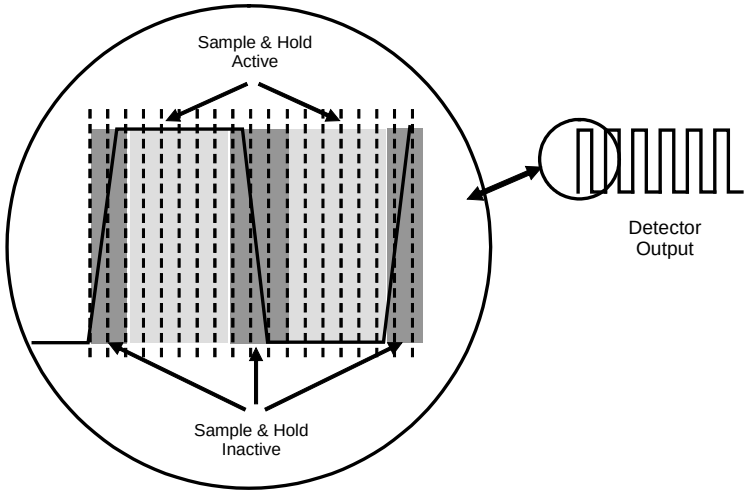


**Figure 13-14: Sample & Hold Timing**

### 13.4.3.2. SYNC/DEMOD STATUS LEDS

The following two status LEDs located on the sync/demod board provide additional diagnostic tools for checking the GFC Wheel rotation.

**Table 13-3: Sync/Demod Status LED Activity**

| LED | Function | Status OK | Fault Status |
|---|---|---|---|
| D1 | M/R Sensor Status | LED flashes approximately 2/second | LED is stuck ON or OFF |
| D2 | Segment Sensor Status | LED flashes approximately 6/second | LED is stuck ON or OFF |

See Section 12.1.4.2 for more information.

#### 13.4.3.3. **PHOTO-DETECTOR TEMPERATURE CONTROL**

The sync/demod board also contains circuitry that controls the IR photo-detector's Thermal Electric Coolers (TEC). A drive voltage, **PHT DRIVE**, is supplied to the coolers by the sync/demod board which is adjusted by the sync/demod board based on a return signal called TEC control which alerts the sync/demod board of the detector's temperature. The warmer the detector, the harder the coolers are driven.

**PHT DRIVE** is one of the Test Functions viewable by the user via the form panel. Press **<TST** or **TST>** until it appears on the display.

#### 13.4.3.4. **DARK CALIBRATION SWITCH**

This switch initiates the Dark Calibration procedure. When initiated by the user (See Section 9.6.1 for more details), the dark calibration process opens this switch, interrupting the signal from the IR photo-detector. This allows the analyzer to measure any offset caused by the sync/demod board circuitry.

#### 13.4.3.5. **ELECTRIC TEST SWITCH**

When active, this circuit generates a specific waveform intended to simulate the function of the IR photo-detector but with a known set of value which is substituted for the detector's actual signal via the dark switch. It may also be initiated by the user (See Section 5.4 for more details).

### 13.4.4. **RELAY BOARD**

By actuating various switches and relays located on this board, the CPU controls the status of other key components. The relay board receives instructions in the form of digital signals over the $I^2C$ bus, interprets these digital instructions and activates its various switches and relays appropriately.

#### 13.4.4.1. **HEATER CONTROL**

The two heaters attached to the sample chamber housing and the GFC Wheel motor are controlled by solid state relays located on the relay board.

The GFC Wheel heater is simply turned on or off, however control of the bench heater also includes circuitry that selects which one of its two separate heating elements is activated depending on whether the instrument is running on 100 VAC, 115 VAC or 230 VAC line power.

#### 13.4.4.2. **GFC WHEEL MOTOR CONTROL**

The GFC Wheel operates from a AC voltage supplied by a multi-input transformer located on the relay board. The step-down ratio of this transformer is controlled by factory-installed jumpers to adjust for 100 VAC, 115 VAC or 230 VAC line power. Other circuitry slightly alters the phase of the AC power supplied to the motor during start up based on whether line power is 50Hz or 60 Hz.

Normally, the GFC Wheel Motor is always turning while the analyzer is on. A physical switch located on the relay board can be used to turn the motor off for certain diagnostic procedures.

#### 13.4.4.3. **ZERO/SPAN VALVE OPTIONS**

Any zero/span/shutoff valve options installed in the analyzer are controlled by a set of electronic switches located on the relay board. These switches, under CPU control, supply the +12VDC needed to activate each valve's solenoid.

#### 13.4.4.4. **IR SOURCE**

The relay board supplies a constant 11.5VDC to the IR Source. Under normal operation the IR source is always on.

### 13.4.4.5. **STATUS LEDS**

Eight LEDs are located on the analyzer's relay board to show the current status on the various control functions performed by the relay board. They are listed on Table 13-4.

**Table 13-4: Relay Board Status LEDs**

| LED | COLOR | FUNCTION | STATUS WHEN LIT | STATUS WHEN UNLIT |
|---|---|---|---|---|
| D1 | RED | Watch Dog Circuit | Cycles On/Off every 3 seconds under direct control of the analyzer's CPU. | |
| D2 | YELLOW | Wheel Heater | HEATING | NOT HEATING |
| D3 | YELLOW | Bench Heater | HEATING | NOT HEATING |
| D4 | YELLOW | Spare | N/A | N/A |
| D5 | GREEN | Sample/Cal Gas Valve Option | Valve Open to CAL GAS FLOW | Valve Open to SAMPLE Gas Flow |
| D6 | GREEN | Zero/Span Gas Valve Option | Valve Open to SPAN GAS FLOW | Valve Open to ZERO GAS FLOW |
| D7 | GREEN | Shutoff Valve Option | Valve Open to CAL GAS FLOW | Valve CLOSED to CAL GAS FLOW |
| D8 | GREEN | IR SOURCE | Source ON | Source OFF |

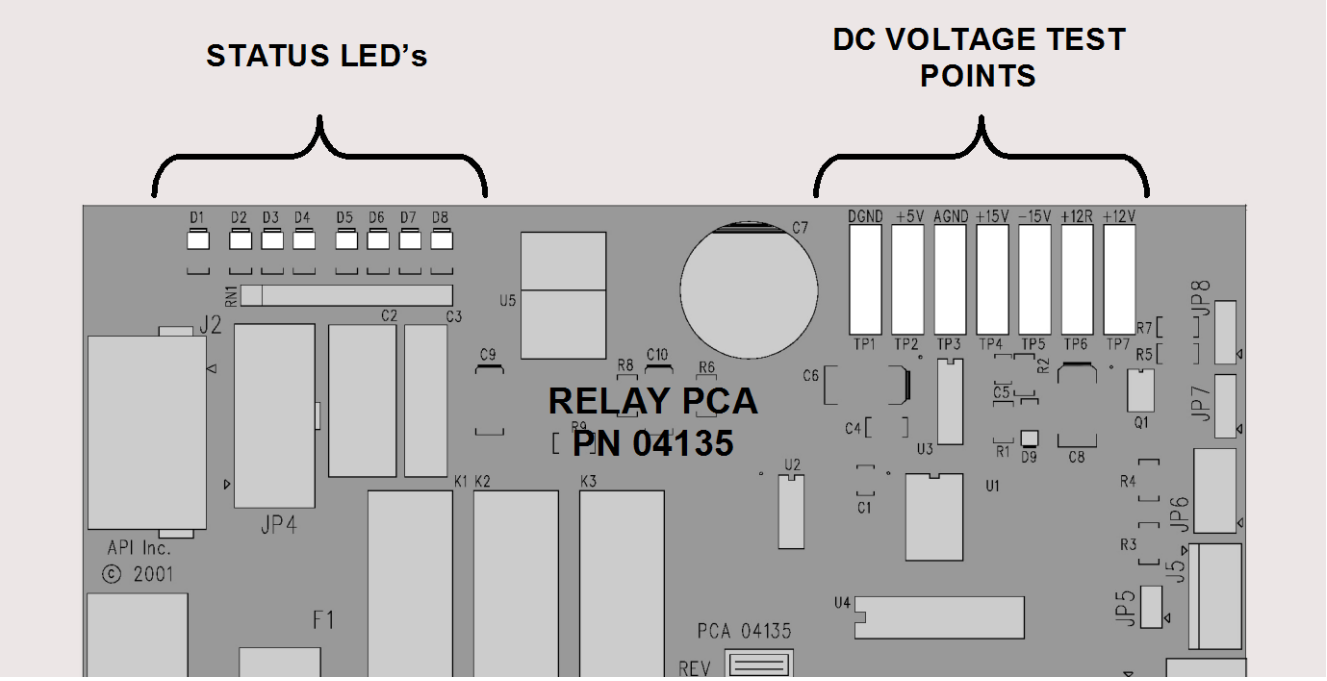


**Figure 13-15: Location of relay board Status LEDs**

### 13.4.4.6. **I2C WATCH DOG CIRCUITRY**

Special circuitry on the relay board monitors the activity on the $I^2C$ bus and drives LED D1. Should this LED ever stay ON or OFF for 30 seconds, the watch dog circuit will automatically shut off all valves as well as turn off the IR Source and all heaters. The GFC Wheel motor will still be running as will the Sample Pump, which is not controlled by the relay board.

## 13.4.5. **MOTHERBOARD**

This printed circuit assembly provides a multitude of functions including, A/D conversion, digital input/output, PC-104 to $I^2C$ translation, temperature sensor signal processing and is a pass through for the RS-232 and RS-485 signals.

### 13.4.5.1. **A TO D CONVERSION**

Analog signals, such as the voltages received from the analyzer's various sensors, are converted into digital signals that the CPU can understand and manipulate by the analog to digital converter (A/D). Under the control of the CPU, this functional block selects a particular signal input (e.g. BOX TEMP, **CO MEAS**, **CO REF**, etc.) and then coverts the selected voltage into a digital word.

The A/D consists of a Voltage-to-Frequency (V-F) converter, a Programmable Logic Device (PLD), three multiplexers, several amplifiers and some other associated devices. The V-F converter produces a frequency proportional to its input voltage. The PLD counts the output of the V-F during a specified time period, and sends the result of that count, in the form of a binary number, to the CPU.

The A/D can be configured for several different input modes and ranges but in the T300/T300M is used in uni-polar mode with a +5 V full scale. The converter includes a 1% over and under-range. This allows signals from –0.05 V to +5.05 V to be fully converted.

For calibration purposes, two reference voltages are supplied to the A/D converter: Reference Ground and +4.096 VDC. During calibration, the device measures these two voltages, outputs their digital equivalent to the CPU. The CPU uses these values to compute the converter's offset and slope and uses these factors for subsequent conversions.

See Section 5.9.3.2 for instructions on performing this calibration.

### 13.4.5.2. **SENSOR INPUTS**

The key analog sensor signals are coupled to the A/D through the master multiplexer from two connectors on the motherboard. 100K terminating resistors on each of the inputs prevent cross talk from appearing on the sensor signals.

#### CO MEASURE AND REFERENCE

These are the primary signals that are used in the computation of the CO concentration. They are the demodulated IR-sensor signals from the sync demodulator board.

#### SAMPLE PRESSURE AND FLOW

These are analog signals from two sensors that measure the pressure and flow rate of the gas stream at the outlet of the sample chamber. This information is used in two ways. First, the sample pressure is used by the CPU to calculate CO concentration. Second, the pressure and flow rate are monitored as a test function to assist the user in predicting and troubleshooting failures.

### 13.4.5.3. THERMISTOR INTERFACE

This circuit provides excitation, termination and signal selection for several negative-coefficient, thermistor temperature sensors located inside the analyzer. They are as follows:

#### SAMPLE TEMPERATURE SENSOR

The source of this signal is a thermistor located inside the sample chamber of the Optical Bench. It measures the temperature of the sample gas in the chamber. This data is used to during the calculation of the CO concentration value.

#### BENCH TEMPERATURE SENSOR

This thermistor is attached to the sample chamber housing. It reports the current temperature of the chamber housing to the CPU as part of the bench heater control loop.

#### WHEEL TEMPERATURE SENSOR

This thermistor is attached to the heatsink on the GFC Wheel motor assembly. It reports the current temperature of the wheel/motor assembly to the CPU as part of the Wheel Heater control loop.

#### BOX TEMPERATURE SENSOR

A thermistor is attached to the motherboard. It measures the analyzer's internal temperature. This information is stored by the CPU and can be viewed by the user for troubleshooting purposes via the front panel display (see Section 12.1.2).

### 13.4.5.4. ANALOG OUTPUTS

The analyzer comes equipped with four analog outputs: **A1**, **A2**, **A3** and **A4**. The type of data and electronic performance of these outputs are configurable by the user (see Section 5.4).

#### OUTPUT LOOP-BACK

All four analog outputs are connected back to the A/D converter through a loop-back circuit. This permits the voltage outputs to be calibrated by the CPU without need for any additional tools or fixtures.

### 13.4.5.5. INTERNAL DIGITAL I/O

This channel is used to communicate digital status and control signals about the operation of key components of the Optical Bench. The CPU sends signals to the sync/demod board that initiate the **ELECTRICAL TEST** and **DARK CALIBRATION** procedures.

### 13.4.5.6. EXTERNAL DIGITAL I/O

This External Digital I/O performs two functions: status outputs and control inputs.

#### STATUS OUTPUTS

Logic-Level voltages are output through an optically isolated 8-pin connector located on the rear panel of the analyzer. These outputs convey good/bad and on/off information

about certain analyzer conditions. They can be used to interface with certain types of programmable devices (See Section 3.3.1.4).

#### CONTROL INPUTS

By applying +5VDC power supplied from an external source such as a PLC or Data logger (See Section 3.3.1.6), Zero and Span calibrations can be initiated by contact closures on the rear panel.

#### POWER UP CIRCUIT

This circuit monitors the +5V power supply during start-up and sets the analog outputs, external digital I/O ports, and $I^2C$ circuitry to specific values until the CPU boots and the instrument software can establish control.

## 13.4.6. $I^2C$ DATA BUS

$I^2C$ is a two-wire, clocked, bi-directional, digital serial I/O bus that is used widely in commercial and consumer electronic systems. A transceiver on the motherboard converts data and control signals from the PC-104 bus to $I^2C$. The data is then fed to the relay board, optional analog input board and valve driver board circuitry.

## 13.4.7. POWER SUPPLY/ CIRCUIT BREAKER

The analyzer operates on 100 VAC, 115 VAC or 230 VAC power at either 50Hz or 60Hz. Individual units are set up at the factory to accept any combination of these five attributes. As illustrated in Figure 13-14, power enters the analyzer through a standard IEC 320 power receptacle located on the rear panel of the instrument. From there it is routed through the ON/OFF Switch located in the lower right corner of the Front Panel. A 6.75 Amp circuit breaker is built into the ON/OFF Switch.

AC power is distributed directly to the sample gas pump. The bench and GFC Wheel heaters as well as the GFC Wheel receive AC power via the relay board.

AC Line power is converted stepped down and converted to DC power by two DC power supplies. One supplies +12 VDC, for valves and the IR source, while a second supply provides +5 VDC and ±15 VDC for logic and analog circuitry. All DC voltages are distributed via the relay board.

**CAUTION**
**GENERAL SAFETY HAZARD**
**Should the AC power circuit breaker trip, investigate and correct the condition causing this situation before turning the analyzer back on.**

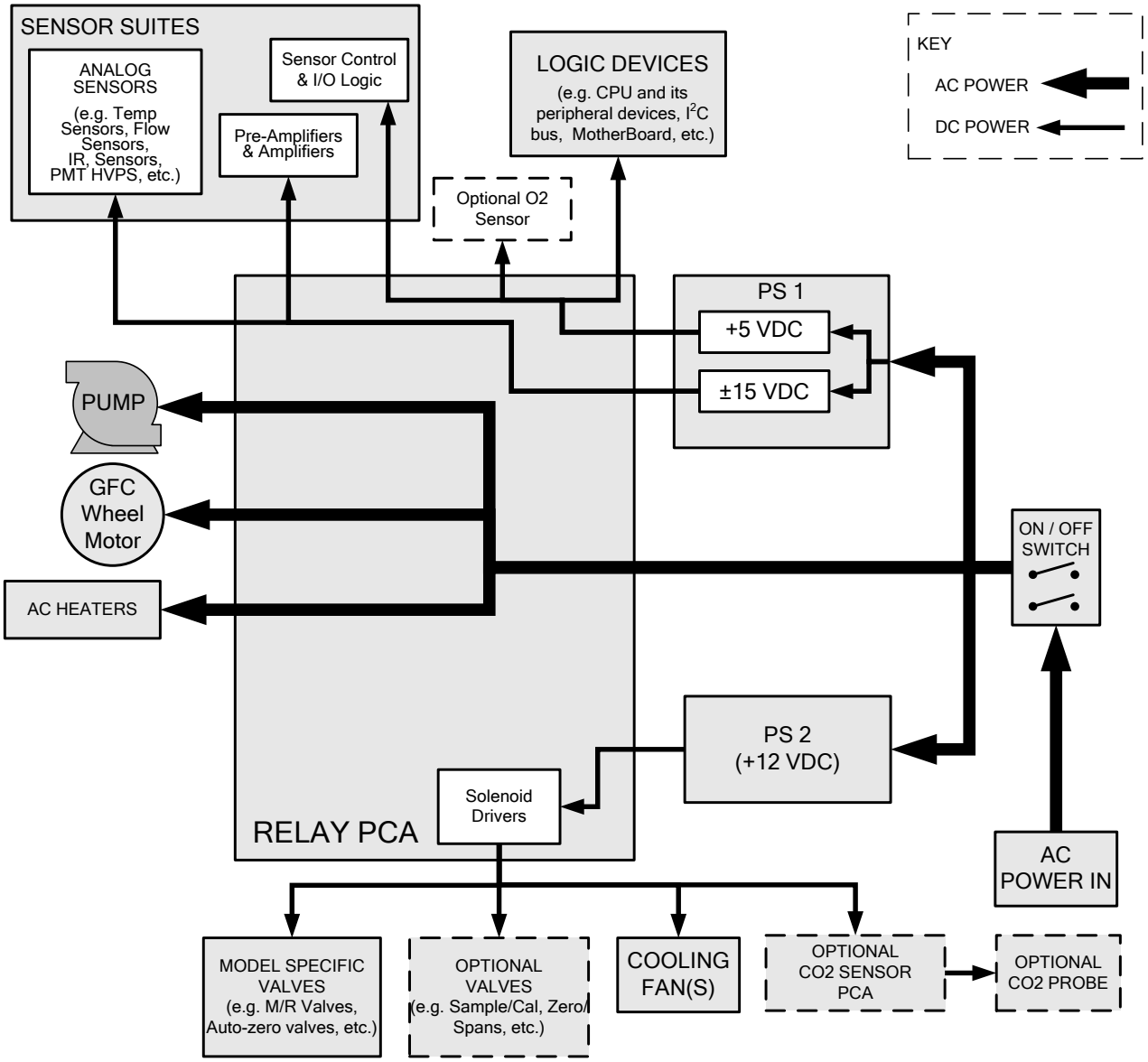


**Figure 13-16: Power Distribution Block Diagram**

## 13.4.8. FRONT PANEL TOUCHSCREEN/DISPLAY INTERFACE

Users can input data and receive information directly through the front panel touchscreen display. The LCD display is controlled directly by the CPU board. The touchscreen is interfaced to the CPU by means of a touchscreen controller that connects to the CPU via the internal USB bus and emulates a computer mouse.

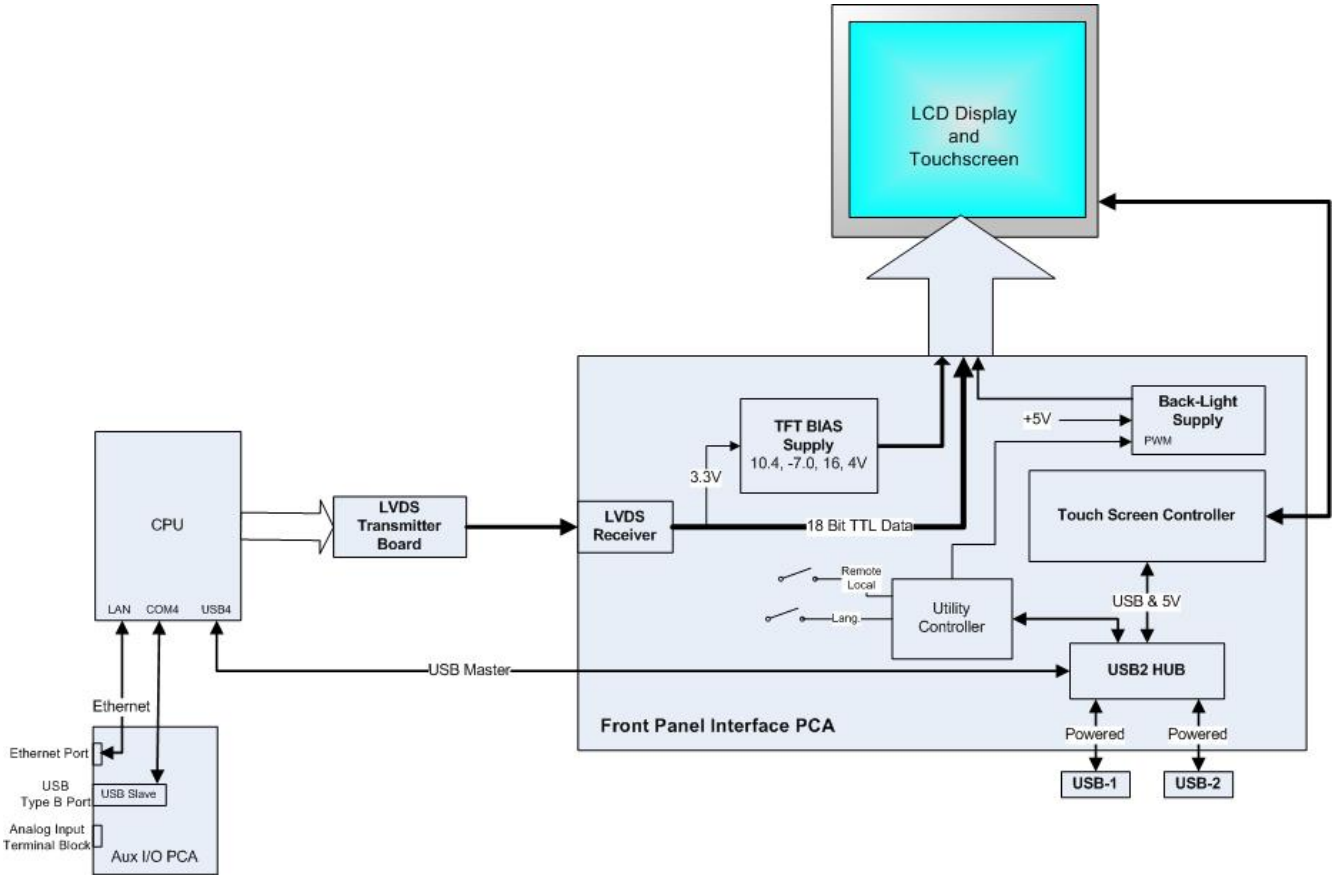


**Figure 13-17: Front Panel and Display Interface Block Diagram**

### 13.4.8.1. LVDS TRANSMITTER BOARD

The LVDS (low voltage differential signaling) transmitter board converts the parallel display bus to a serialized, low voltage, differential signal bus in order to transmit the video signal to the LCD interface PCA.

### 13.4.8.2. FRONT PANEL TOUCHSCREEN/DISPLAY INTERFACE PCA

The front panel touchscreen/display interface PCA controls the various functions of the display and touchscreen. For driving the display it provides connection between the CPU video controller and the LCD display module. This PCA also contains:

- power supply circuitry for the LCD display module
- a USB hub that is used for communications with the touchscreen controller and the two front panel USB device ports
- the circuitry for powering the display backlight

# 13.5. SOFTWARE OPERATION

The T300/T300M Gas Filter Correlation Carbon Monoxide Analyzer has a high performance, VortexX86-based microcomputer running Windows CE. Inside Windows CE, special software developed by Teledyne API interprets user commands via the various interfaces, performs procedures and tasks, stores data in the CPU's various memory devices and calculates the concentration of the sample gas.

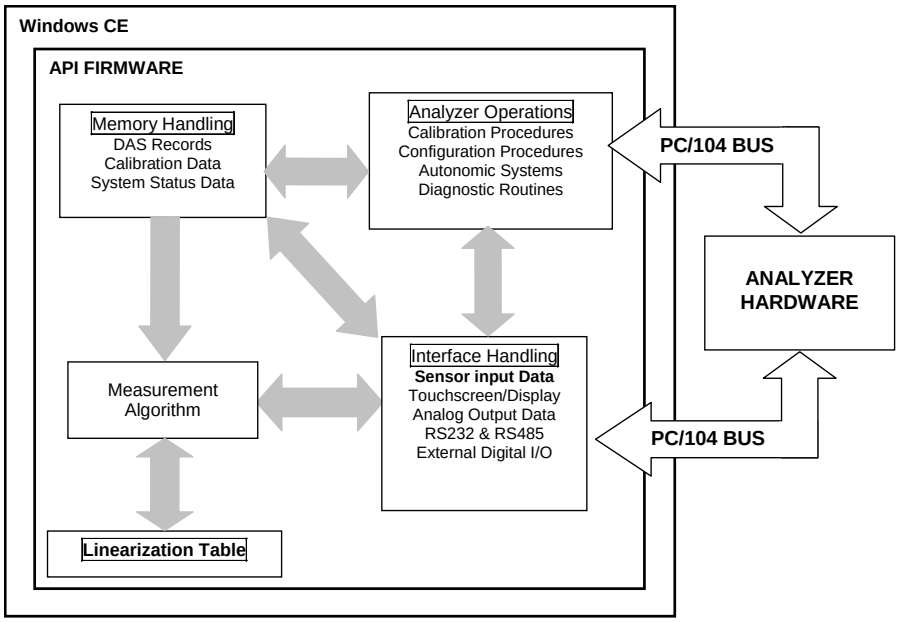


**Figure 13-18: Basic Software Operation**

## 13.5.1. ADAPTIVE FILTER

The T300/T300M software processes the **CO MEAS** and **CO REF** signals, after they are digitized by the motherboard, through an adaptive filter built into the software. Unlike other analyzers that average the output signal over a fixed time period, the T300/T300M averages over a set number of samples, where each sample is 0.2 seconds. This technique is known as boxcar averaging. During operation, the software automatically switches between two different length filters based on the conditions at hand. Once triggered, the short filter remains engaged for a fixed time period to prevent chattering.

During conditions of constant or nearly constant concentration the software, by default, computes an average of the last 750 samples, or approximately 150 seconds. This provides the calculation portion of the software with smooth stable readings. If a rapid change in concentration is detected the filter includes, by default, the last 48 samples, approximately 10 seconds of data, to allow the analyzer to more quickly respond. If necessary, these boxcar lengths can be changed between 1 and 1000 samples but with corresponding tradeoffs in rise time and signal-to-noise ratio (contact customer service for more information).

Two conditions must be simultaneously met to switch to the short filter. First the instantaneous concentration must exceed the average in the long filter by a fixed amount. Second the instantaneous concentration must exceed the average in the long filter by a portion, or percentage, of the average in the long filter.

## 13.5.2. CALIBRATION - SLOPE AND OFFSET

Calibration of the analyzer is performed exclusively in software.

During instrument calibration (see Section 9) the user enters expected values for zero and span via the front panel control buttonand commands the instrument to make readings of calibrated sample gases for both levels. The readings taken are adjusted, linearized, and compared to the expected values. With this information the software computes values for instrument slope and offset and stores these values in memory for use in calculating the CO concentration of the sample gas.

The instrument slope and offset values recorded during the last calibration are available for viewing from the from the front panel (see Section 3.4.3).

## 13.5.3. MEASUREMENT ALGORITHM

Once the IR photo-detector signal is demodulated into **CO MEAS** and **CO REF** by the sync/demod board and converted to digital data by the motherboard, the T300/T300M analytical software calculates the ratio between **CO MEAS** and **CO REF**. This value is compared to a look-up table that is used, with interpolation, to linearize the response of the instrument. The linearized concentration value is combined with calibration slope and offset values, then normalized for changes in sample gas pressure to produce the final CO concentration. This is the value that is displayed on the instrument front panel display and is stored in memory by the analyzer's DAS system.

## 13.5.4. TEMPERATURE AND PRESSURE COMPENSATION

Changes in pressure can have a noticeable, effect on the CO concentration calculation. To account for this, the T300/T300M software includes a feature which allows the instrument to compensate for the CO calculations based on changes in ambient pressure.

The TPC feature multiplies the analyzer's CO concentration by a factor which is based on the difference between the ambient pressure of the sample gas normalized to standard atmospheric pressure. As ambient pressure increases, the compensated CO concentration is decreased.

## 13.5.5. INTERNAL DATA ACQUISITION SYSTEM (DAS)

The DAS is designed to implement predictive diagnostics that stores trending data for users to anticipate when an instrument will require service. Large amounts of data can be stored in non-volatile memory and retrieved in plain text format for further processing with common data analysis programs. The DAS has a consistent user interface in all Teledyne API analyzers. New data parameters and triggering events can be added to the instrument as needed.

Depending on the sampling frequency and the number of data parameters the DAS can store several months of data, which are retained even when the instrument is powered off or a new firmware is installed. The DAS permits users to access the data through the instrument's front panel or the remote interface. The latter can automatically download stored data for further processing. For information on using the DAS, refer to Section 7.

# 14. A PRIMER ON ELECTRO-STATIC DISCHARGE

Teledyne API considers the prevention of damage caused by the discharge of static electricity to be extremely important part of making sure that your analyzer continues to provide reliable service for a long time. This section describes how static electricity occurs, why it is so dangerous to electronic components and assemblies as well as how to prevent that damage from occurring.

## 14.1. HOW STATIC CHARGES ARE CREATED

Modern electronic devices such as the types used in the various electronic assemblies of your analyzer, are very small, require very little power and operate very quickly. Unfortunately, the same characteristics that allow them to do these things also make them very susceptible to damage from the discharge of static electricity. Controlling electrostatic discharge begins with understanding how electro-static charges occur in the first place.

Static electricity is the result of something called triboelectric charging which happens whenever the atoms of the surface layers of two materials rub against each other. As the atoms of the two surfaces move together and separate, some electrons from one surface are retained by the other.

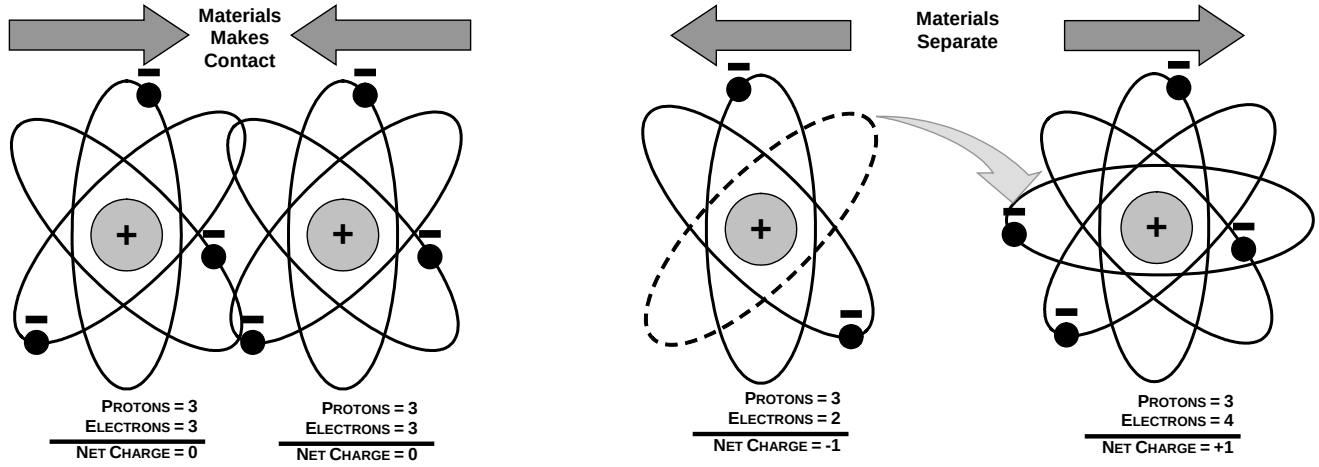


**Figure 14-1: Triboelectric Charging**

If one of the surfaces is a poor conductor or even a good conductor that is not grounded, the resulting positive or negative charge cannot bleed off and becomes trapped in place,

or static. The most common example of triboelectric charging happens when someone wearing leather or rubber soled shoes walks across a nylon carpet or linoleum tiled floor. With each step, electrons change places and the resulting electro-static charge builds up, quickly reaching significant levels. Pushing an epoxy printed circuit board across a workbench, using a plastic handled screwdriver or even the constant jostling of Styrofoam™ pellets during shipment can also build hefty static charges.

**Table 14-1: Static Generation Voltages for Typical Activities**

| MEANS OF GENERATION | 65-90% RH | 10-25% RH |
|---|---|---|
| Walking across nylon carpet | 1,500V | 35,000V |
| Walking across vinyl tile | 250V | 12,000V |
| Worker at bench | 100V | 6,000V |
| Poly bag picked up from bench | 1,200V | 20,000V |
| Moving around in a chair padded with urethane foam | 1,500V | 18,000V |

# 14.2. HOW ELECTRO-STATIC CHARGES CAUSE DAMAGE

Damage to components occurs when these static charges come into contact with an electronic device. Current flows as the charge moves along the conductive circuitry of the device and the typically very high voltage levels of the charge overheat the delicate traces of the integrated circuits, melting them or even vaporizing parts of them. When examined by microscope the damage caused by electro-static discharge looks a lot like tiny bomb craters littered across the landscape of the component's circuitry.

A quick comparison of the values in Table 14-1 with the those shown in the Table 14-2, listing device susceptibility levels, shows why *Semiconductor Reliability News* estimates that approximately 60% of device failures are the result of damage due to electro-static discharge.

**Table 14-2: Sensitivity of Electronic Devices to Damage by ESD**

| DEVICE | DAMAGE SUSCEPTIBILITY VOLTAGE RANGE | |
|---|---|---|
| | DAMAGE BEGINS OCCURRING AT | CATASTROPHIC DAMAGE AT |
| MOSFET | 10 | 100 |
| VMOS | 30 | 1800 |
| NMOS | 60 | 100 |
| GaAsFET | 60 | 2000 |
| EPROM | 100 | 100 |
| JFET | 140 | 7000 |
| SAW | 150 | 500 |
| Op-AMP | 190 | 2500 |
| CMOS | 200 | 3000 |
| Schottky Diodes | 300 | 2500 |
| Film Resistors | 300 | 3000 |
| This Film Resistors | 300 | 7000 |
| ECL | 500 | 500 |
| SCR | 500 | 1000 |
| Schottky TTL | 500 | 2500 |

Potentially damaging electro-static discharges can occur:

- Any time a charged surface (including the human body) discharges to a device. Even simple contact of a finger to the leads of a sensitive device or assembly can allow enough discharge to cause damage. A similar discharge can occur from a charged conductive object, such as a metallic tool or fixture.
- When static charges accumulated on a sensitive device discharges from the device to another surface such as packaging materials, work surfaces, machine surfaces or other device. In some cases, charged device discharges can be the most destructive.
- A typical example of this is the simple act of installing an electronic assembly into the connector or wiring harness of the equipment in which it is to function. If the assembly is carrying a static charge, as it is connected to ground a discharge will occur.
- Whenever a sensitive device is moved into the field of an existing electro-static field, a charge may be induced on the device in effect discharging the field onto the device. If the device is then momentarily grounded while within the electrostatic field or removed from the region of the electrostatic field and grounded somewhere else, a second discharge will occur as the charge is transferred from the device to ground.

## 14.3. COMMON MYTHS ABOUT ESD DAMAGE

- **I didn't feel a shock so there was no electro-static discharge:** The human nervous system isn't able to feel a static discharge of less than 3500 volts. Most devices are damaged by discharge levels much lower than that.
- **I didn't touch it so there was no electro-static discharge:** Electro Static charges are fields whose lines of force can extend several inches or sometimes even feet away from the surface bearing the charge.
- **It still works so there was no damage:** Sometimes the damaged caused by electro-static discharge can completely sever a circuit trace causing the device to fail immediately. More likely, the trace will be only partially occluded by the damage causing degraded performance of the device or worse, weakening the trace. This weakened circuit may seem to function fine for a short time, but even the very low voltage and current levels of the device's normal operating levels will eat away at the defect over time causing the device to fail well before its designed lifetime is reached.
- These latent failures are often the most costly since the failure of the equipment in which the damaged device is installed causes down time, lost data, lost productivity, as well as possible failure and damage to other pieces of equipment or property.
- Static Charges can't build up on a conductive surface: There are two errors in this statement.
- Conductive devices can build static charges if they are not grounded. The charge will be equalized across the entire device, but without access to earth ground, they are still trapped and can still build to high enough levels to cause damage when they are discharged.
- A charge can be induced onto the conductive surface and/or discharge triggered in the presence of a charged field such as a large static charge clinging to the surface of a nylon jacket of someone walking up to a workbench.
- **As long as my analyzer is properly installed, it is safe from damage caused by static discharges:** It is true that when properly installed the chassis ground of your analyzer is tied to earth ground and its electronic components are prevented from building static electric charges themselves. This does not prevent discharges from

static fields built up on other things, like you and your clothing, from discharging through the instrument and damaging it.

# 14.4. BASIC PRINCIPLES OF STATIC CONTROL

It is impossible to stop the creation of instantaneous static electric charges. It is not, however difficult to prevent those charges from building to dangerous levels or prevent damage due to electro-static discharge from occurring.

## 14.4.1. GENERAL RULES

Only handle or work on all electronic assemblies at a properly set up ESD station. Setting up an ESD safe workstation need not be complicated. A protective mat properly tied to ground and a wrist strap are all that is needed to create a basic anti-ESD workstation.

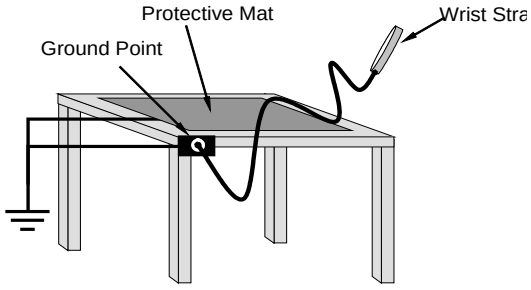


**Figure 14-2: Basic anti-ESD Workbench**

For technicians that work in the field, special lightweight and portable anti-ESD kits are available from most suppliers of ESD protection gear. These include everything needed to create a temporary anti-ESD work area anywhere.

- **Always wear an Anti-ESD wrist strap when working on the electronic assemblies of your analyzer.** An anti-ESD wrist strap keeps the person wearing it at or near the same potential as other grounded objects in the work area and allows static charges to dissipate before they can build to dangerous levels. Anti-ESD wrist straps terminated with alligator clips are available for use in work areas where there is no available grounded plug.

  Also, anti-ESD wrist straps include a current limiting resistor (usually around one meg-ohm) that protects you should you accidentally short yourself to the instrument's power supply.

- **Simply touching a grounded piece of metal is insufficient**. While this may temporarily bleed off static charges present at the time, once you stop touching the grounded metal new static charges will immediately begin to re-build. In some conditions, a charge large enough to damage a component can rebuild in just a few seconds.
- **Always store sensitive components and assemblies in anti-ESD storage bags or bins:** Even when you are not working on them, store all devices and assemblies in a closed anti-Static bag or bin. This will prevent induced charges from building up on the device or assembly and nearby static fields from discharging through it.
- **Use metallic anti-ESD bags for storing and shipping ESD sensitive components and assemblies rather than pink-poly bags.** The famous, pink-poly bags are made of a plastic that is impregnated with a liquid (similar to liquid laundry detergent) which very slowly sweats onto the surface of the plastic creating a slightly conductive layer over the surface of the bag.

  While this layer may equalizes any charges that occur across the whole bag, it does not prevent the build up of static charges. If laying on a conductive, grounded surface, these bags will allow charges to bleed away but the very charges that build up on the surface of the bag itself can be transferred through the bag by induction onto the circuits of your ESD sensitive device. Also, the liquid impregnating the plastic is eventually used up after which the bag is as useless for preventing damage from ESD as any ordinary plastic bag.

  Anti-Static bags made of plastic impregnated with metal (usually silvery in color) provide all of the charge equalizing abilities of the pink-poly bags but also, when properly sealed, create a Faraday cage that completely isolates the contents from discharges and the inductive transfer of static charges.

  Storage bins made of plastic impregnated with carbon (usually black in color) are also excellent at dissipating static charges and isolating their contents from field effects and discharges.
- **Never use ordinary plastic adhesive tape near an ESD sensitive device or to close an anti-ESD bag.** The act of pulling a piece of standard plastic adhesive tape, such as Scotch® tape, from its roll will generate a static charge of several thousand or even tens of thousands of volts on the tape itself and an associated field effect that can discharge through or be induced upon items up to a foot away.

## 14.4.2. BASIC ANTI-ESD PROCEDURES FOR ANALYZER REPAIR AND MAINTENANCE

### 14.4.2.1. WORKING AT THE INSTRUMENT RACK

When working on the analyzer while it is in the instrument rack and plugged into a properly grounded power supply:

1. Attach you anti-ESD wrist strap to ground before doing anything else.
   - Use a wrist strap terminated with an alligator clip and attach it to a bare metal portion of the instrument chassis.
   - This will safely connect you to the same ground level to which the instrument and all of its components are connected.
2. Pause for a second or two to allow any static charges to bleed away.
3. Open the casing of the analyzer and begin work. Up to this point, the closed metal casing of your analyzer has isolated the components and assemblies inside from any conducted or induced static charges.

4. If you must remove a component from the instrument, do not lay it down on a non-ESD preventative surface where static charges may lie in wait.
5. Only disconnect your wrist strap after you have finished work and closed the case of the analyzer.

### 14.4.2.2. **WORKING AT AN ANTI-ESD WORK BENCH**

When working on an instrument of an electronic assembly while it is resting on a anti-ESD workbench:

1. Plug you anti-ESD wrist strap into the grounded receptacle of the work station before touching any items on the work station and while standing at least a foot or so away. This will allow any charges you are carrying to bleed away through the ground connection of the workstation and prevent discharges due to field effects and induction from occurring.
2. Pause for a second or two to allow any static charges to bleed away.
3. Only open any anti-ESD storage bins or bags containing sensitive devices or assemblies after you have plugged your wrist strap into the workstation.
   - Lay the bag or bin on the workbench surface.
   - Before opening the container, wait several seconds for any static charges on the outside surface of the container to be bled away by the workstation's grounded protective mat.
4. Do not pick up tools that may be carrying static charges while also touching or holding an ESD sensitive device.
   - Only lay tools or ESD-sensitive devices and assemblies on the conductive surface of your workstation. Never lay them down on any non-ESD preventative surface.
5. Place any static sensitive devices or assemblies in anti-static storage bags or bins and close the bag or bin before unplugging your wrist strap.
6. Disconnecting your wrist strap is always the last action taken before leaving the workbench.

### 14.4.2.3. **TRANSFERRING COMPONENTS FROM RACK TO BENCH AND BACK**

When transferring a sensitive device from an installed Teledyne API analyzer to an anti-ESD workbench or back:

1. Follow the instructions listed above for working at the instrument rack and workstation.
2. Never carry the component or assembly without placing it in an anti-ESD bag or bin.
3. Before using the bag or container allow any surface charges on it to dissipate:
   - If you are at the instrument rack, hold the bag in one hand while your wrist strap is connected to a ground point.
   - If you are at an anti-ESD workbench, lay the container down on the conductive work surface.
   - In either case wait several seconds.
4. Place the item in the container.
5. Seal the container. If using a bag, fold the end over and fastening it with anti-ESD tape.

- Folding the open end over isolates the component(s) inside from the effects of static fields.
- Leaving the bag open or simply stapling it shut without folding it closed prevents the bag from forming a complete protective envelope around the device.

6. Once you have arrived at your destination, allow any surface charges that may have built up on the bag or bin during travel to dissipate:
   - Connect your wrist strap to ground.
   - If you are at the instrument rack, hold the bag in one hand while your wrist strap is connected to a ground point.
   - If you are at a anti-ESD workbench, lay the container down on the conductive work surface
   - In either case wait several seconds
7. Open the container.

### 14.4.2.4. OPENING SHIPMENTS FROM TELEDYNE API'S CUSTOMER SERVICE

Packing materials such as bubble pack and Styrofoam pellets are extremely efficient generators of static electric charges. To prevent damage from ESD, Teledyne API ships all electronic components and assemblies in properly sealed anti-ESD containers.

Static charges will build up on the outer surface of the anti-ESD container during shipping as the packing materials vibrate and rub against each other. To prevent these static charges from damaging the components or assemblies being shipped make sure that you:

Always unpack shipments from Teledyne API Customer Service by:

1. Opening the outer shipping box away from the anti-ESD work area.
2. Carry the still sealed anti-ESD bag, tube or bin to the anti-ESD work area.
3. Follow steps 6 and 7 of Section 14.4.2.3 above when opening the anti-ESD container at the work station.
4. Reserve the anti-ESD container or bag to use when packing electronic components or assemblies to be returned to Teledyne API.

### 14.4.2.5. PACKING COMPONENTS FOR RETURN TO TELEDYNE API'S CUSTOMER SERVICE

Always pack electronic components and assemblies to be sent to Teledyne API's Customer Service in anti-ESD bins, tubes or bags.

**CAUTION**
**ESD Hazard**

- **DO NOT use pink-poly bags.**
- **NEVER allow any standard plastic packaging materials to touch the electronic component/assembly directly.**
  - **This includes, but is not limited to, plastic bubble-pack, Styrofoam peanuts, open cell foam, closed cell foam, and adhesive tape.**
- **DO NOT use standard adhesive tape as a sealer. Use ONLY anti-ESD tape.**

Never carry the component or assembly without placing it in an anti-ESD bag or bin.

1. Before using the bag or container allow any surface charges on it to dissipate:
   - If you are at the instrument rack, hold the bag in one hand while your wrist strap is connected to a ground point.
   - If you are at an anti-ESD workbench, lay the container down on the conductive work surface.
   - In either case wait several seconds.
2. Place the item in the container.
3. Seal the container. If using a bag, fold the end over and fastening it with anti-ESD tape.
   - Folding the open end over isolates the component(s) inside from the effects of static fields.
   - Leaving the bag open or simply stapling it shut without folding it closed prevents the bag from forming a complete protective envelope around the device.

**Note**

**If you do not already have an adequate supply of anti-ESD bags or containers available, Teledyne API's Customer Service department will supply them (see Section 11.8 for contact information).**

**Follow the instructions listed above for working at the instrument rack and workstation.**

# GLOSSARY

Note: Some terms in this glossary may not occur elsewhere in this manual.

| Term | Description/Definition |
|---|---|
| 10Base-T | an Ethernet standard that uses twisted ("T") pairs of copper wires to transmit at 10 megabits per second (Mbps) |
| 100Base-T | same as 10BaseT except ten times faster (100 Mbps) |
| APICOM | name of a remote control program offered by Teledyne-API to its customers |
| ASSY | *Assembly* |
| CAS | *Code-Activated Switch* |
| CD | *Corona Discharge*, a frequently luminous discharge, at the surface of a conductor or between two conductors of the same transmission line, accompanied by ionization of the surrounding atmosphere and often by a power loss |
| CE | *Converter Efficiency*, the percentage of light energy that is actually converted into electricity |
| CEM | *Continuous Emission Monitoring* |
| Chemical formulas that may be included in this document: | |
| $CO_2$ | carbon dioxide |
| $C_3H_8$ | propane |
| $CH_4$ | methane |
| $H_2O$ | water vapor |
| HC | general abbreviation for hydrocarbon |
| $HNO_3$ | nitric acid |
| $H_2S$ | hydrogen sulfide |
| NO | nitric oxide |
| $NO_2$ | nitrogen dioxide |
| $NO_X$ | nitrogen oxides, here defined as the sum of NO and $NO_2$ |
| $NO_y$ | nitrogen oxides, often called odd nitrogen: the sum of $NO_X$ plus other compounds such as $HNO_3$ (definitions vary widely and may include nitrate ($NO_3$), PAN, $N_2O$ and other compounds as well) |
| $NH_3$ | ammonia |
| $O_2$ | molecular oxygen |
| $O_3$ | ozone |
| $SO_2$ | sulfur dioxide |
| $cm^3$ | metric abbreviation for *cubic centimeter* (replaces the obsolete abbreviation "cc") |
| CPU | *Central Processing Unit* |
| DAC | *Digital-to-Analog Converter* |

| | |
|---|---|
| DAS | *Data Acquisition System* |
| DCE | *Data Communication Equipment* |
| DFU | *Dry Filter Unit* |
| DHCP | *Dynamic Host Configuration Protocol.* A protocol used by LAN or Internet servers to automatically set up the interface protocols between themselves and any other addressable device connected to the network |
| DIAG | *Diagnostics*, the diagnostic settings of the analyzer. |
| DOM | *Disk On Module,* a 44-pin IDE flash drive with up to 128MB storage capacity for instrument's firmware, configuration settings and data |
| DOS | *Disk Operating System* |
| DRAM | *Dynamic Random Access Memory* |
| DR-DOS | *Digital Research DOS* |
| DTE | *Data Terminal Equipment* |
| EEPROM | *Electrically Erasable Programmable Read-Only Memory* also referred to as a FLASH chip or drive |
| ESD | *Electro-Static Discharge* |
| ETEST | *Electrical Test* |
| Ethernet | a standardized (IEEE 802.3) computer networking technology for local area networks (LANs), facilitating communication and sharing resources |
| FEP | *Fluorinated Ethylene Propylene* polymer, one of the polymers that Du Pont markets as *Teflon*® |
| Flash | non-volatile, solid-state memory |
| FPI | *Fabry-Perot Interface*: a special light filter typically made of a transparent plate with two reflecting surfaces or two parallel, highly reflective mirrors |
| GFC | *Gas Filter Correlation* |
| $I^2C$ bus | a clocked, bi-directional, serial bus for communication between individual analyzer components |
| IC | *Integrated Circuit*, a modern, semi-conductor circuit that can contain many basic components such as resistors, transistors, capacitors etc in a miniaturized package used in electronic assemblies |
| IP | *Internet Protocol* |
| IZS | *Internal Zero Span* |
| LAN | *Local Area Network* |

| | |
|---|---|
| LCD | *Liquid Crystal Display* |
| LED | *Light Emitting Diode* |
| LPM | *Liters Per Minute* |
| MFC | *Mass Flow Controller* |
| M/R | *Measure/Reference* |
| MOLAR MASS | the mass, expressed in grams, of 1 mole of a specific substance. Conversely, one mole is the amount of the substance needed for the molar mass to be the same number in grams as the atomic mass of that substance.<br>EXAMPLE: The atomic weight of Carbon is 12 therefore the molar mass of Carbon is 12 grams. Conversely, one mole of carbon equals the amount of carbon atoms that weighs 12 grams.<br>Atomic weights can be found on any Periodic Table of Elements. |
| NDIR | *Non-Dispersive Infrared* |
| NIST-SRM | *National Institute of Standards and Technology - Standard Reference Material* |
| PC | *Personal Computer* |
| PCA | P*rinted Circuit Assembly*, the PCB with electronic components, ready to use |
| PC/AT | *Personal Computer / Advanced Technology* |
| PCB | *Printed Circuit Board*, the bare board without electronic component |
| PFA | *Perfluoroalkoxy*, an inert polymer; one of the polymers that *Du Pont* markets as *Teflon*® |
| PLC | *Programmable Logic Controller*, a device that is used to control instruments based on a logic level signal coming from the analyzer |
| PLD | *Programmable Logic Device* |
| PLL | *Phase Lock Loop* |
| PMT | *Photo Multiplier Tube*, a vacuum tube of electrodes that multiply electrons collected and charged to create a detectable current signal |
| P/N (or PN) | *Part Number* |
| PSD | *Prevention of Significant Deterioration* |
| PTFE | *Polytetrafluoroethylene*, a very inert polymer material used to handle gases that may react on other surfaces; one of the polymers that *Du Pont* markets as *Teflon*® |
| PVC | *Poly Vinyl Chloride*, a polymer used for downstream tubing |
| Rdg | Reading |
| RS-232 | specification and standard describing a serial communication method between DTE (Data Terminal Equipment) and DCE (Data Circuit-terminating Equipment) devices, using a maximum cable-length of 50 feet |

| | |
|---|---|
| RS-485 | specification and standard describing a binary serial communication method among multiple devices at a data rate faster than RS-232 with a much longer distance between the host and the furthest device |
| SAROAD | *Storage and Retrieval of Aerometric Data* |
| SLAMS | *State and Local Air Monitoring Network Plan* |
| SLPM | *Standard Liters Per Minute* of a gas at standard temperature and pressure |
| STP | *Standard Temperature and Pressure* |
| TCP/IP | *Transfer Control Protocol / Internet Protocol*, the standard communications protocol for Ethernet devices |
| TEC | *Thermal Electric Cooler* |
| TPC | *Temperature/Pressure Compensation* |
| USB | *Universal Serial Bus*: a standard connection method to establish communication between peripheral devices and a host controller, such as a mouse and/or keyboard and a personal computer or laptop |
| VARS | *Variables*, the variable settings of the instrument |
| V-F | *Voltage-to-Frequency* |
| Z/S | *Zero / Span* |

## *6*

60 Hz, 46

## *A*

Absorption Path Lengths, 298
AC Power 60 Hz, 46
AIN, 135
**ALRM**, 96, 140
**ANALOG CAL WARNING**, 77, 93
Analog Inputs, 135
Analog Outputs, 47, 48, 49, 95, 96, 98, 99, 100, 116, **117**–**35**, 284, 285
  Ain Calibration, 135
  **CONC1**, 79
  **CONC2**, 79
  Configuration & Calibration, 96, 121, 123, 124, 126, 127, 129, 131, 133, 134, 135
    *Automatic, 39, 95, 127*
    *Manual-Current Loop, 130, 132*
    *Manual-Voltage, 128*
  Electrical Connections, 47
  Electronic Range Selection, 102, 122
  Output Loop Back, 319
  Over-Range Feature, 133
  Pin Assignments, 48
  Recorder Offset, 134
  Reporting Range, 80, 95
  Test Channel, 138
    *BENCH TEMP, 138*
    *CHASSIS TEMP, 138*
    *CO MEASURE, 138*
    *CO REFERFENCE, 138*
    *NONE, 138*
    *$O_2$ CELL TEMP, 138*
    *PHT DRIVE, 138*
    *SAMPLE FLOW, 138*
    *SAMPLE PRESS, 138*
    *SAMPLE TEMP, 138*
    *WHEEL TEMP, 138*
AOUT  Calibration Feature, 124
APICOM, 25, 26, 144, 167, 170, 181, 186, 187, 199, 249
  and DAS System, 169, 173, 178, 181, 183, 184, 187
  Interface Example, 186
  Software Download, 187
ATIMER, 169, 173, 175
AutoCal, 92, 95, 124, 212, 213, 214, 236, 296
AZERO, 165

## *B*

Baud Rate, 157
Beer-Lambert law, 25
BENCH TEMP, 92, 259
**BENCH TEMP WARNING**, 77, 93, 165, 257
Bench Temperature
  Control, 310
BENCH_HEATER, 266
**BOX TEMP**, 77, 92, 165, 259, 275
**BOX TEMP WARNING**, 77, 93, 165, 257
brass, 61, 197, 275

## *C*

CAL Button, 94, 295
CALDAT, 170
Calibration
  AIN, 135
  Analog Ouputs, 39, 95, 127
  Analog Outputs
    *Current Loop, 130, 132*
    *Voltage, 128*
  Initial Calibration
    *Basic Configuration, 80*
Calibration Checks, 200, 208
Calibration Gases
  Zero Air, 42
Calibration Gasses
  Span Gas, 64, 66, 68, 70, 73, 202, 209, 295
    *Dilution Feature, 108*
  Standard Reference Materials (SRM's)
    *CO Span Gas, 75*
  Zero Air, 64, 66, 68, 70, 73, 198
CALS Button, 94, 205, 295
CALZ Button, 94, 205
**CANNOT DYN SPAN**, 77, 93, 165, 257
**CANNOT DYN ZERO**, 77, 93, 165, 257
Carbon Monoxide, 25, 240
CLOCK_ADJ, 111, 114
CO Concentration Alarms, 140, 141
CO MEAS, 92, 219, 248, 249, 259, 274, 277, 281, 292, 293, 300, 301, 302, 306, 312, 313, 318, 323, 324
CO REF, 92, 219, 259, 274, 277, 281, 300, 301, 302, 306, 312, 313, 318, 323, 324
$CO_2$, 51, 75, 80, 85, 89, 92, 105, 114, 120, 162, 165, 218, 227, 228, 229, 230, 236, 288
**CO2 ALARM1 WARN**, 78
**CO2 ALARM2 WARN**, 78
$CO_2$ OFFSET, 92
$CO_2$ Sensor, 51, 75, 85, 92, 165, 227, 229
  Calibration
    *Procedure, 230*
    *Setup, 227*
    *Span Gas Concentration, 228*
  Troubleshoting, 288
$CO_2$ Sensor Option

Pneumatic Set Up for Calibration, 227
$CO_2$ SLOPE, 92
COMM Ports, 144, 157, 195
and DAS System, 183
COM1, 57
COM2, 57, 58, 144
Communication Modes, 144
DCE & DTE, 56
Machine ID, 60
Parity, 144, 157
COMM PORTS
Default Settings, 57
CONC, 169, 173
CONC ALRM1 WARNING, 93, 165
CONC ALRM2 WARNING, 93, 165
**CONC Button**, 114, 295
CONC VALID, 51, 286
CONC_PRECISION, 114
**CONC1**, 79
**CONC2**, 79
Concentration Field, 39
**CONFIG INITIALIZED**, 77, 93, 257
Contact, 331
Continuous Emission Monitoring (CEM), 108
Control Buttons Definition Field, 39
Control Inputs, 51, 286, 320
Pin Assignments, 52
Control InputS
Electrical Connections, 51
CPU, 57, 76, 77, 93, 97, 111, 120, 135, 219, 220, 254, 257, 259, 261, 263, 265, 287, 306, 307, 309, 312, 315, 316, 317, 318, 319, 320
Analog to Digital Converter, 77, 93, 120
Critical Flow Orifice, 169, 251, 252, 257, 267, 272, 289, 304, 305
Current Loop Outputs, 48, 49, 130, 132
Manual Calibration, 130


## *D*


Dark Calibration, 219, 315, 319
DAS Parameters
editing, 176
DAS System, 39, 77, 79, 92, 93, 95, 107, 114, 188, 199, 213, 218, 249, 257, 267, 297, 324
and APICOM, 186, 188
and RS-232, 188
and Terminal Emulation Programs, 188
Channel Names, 174
Channels, 168, 171
*CALDAT, 170*
*CONC, 169*
*PNUNTC, 169*
Compact Data Report, 183
HOLD OFF, 114, 169, 185
Holdoff Period, 295
Number of Records, 169, 181
Parameters, 168, 169
*CONC, 173*
*NXCNC1, 173*
*PMTDET, 169*
Precision, 176
Report Period, 169, 179, 184
Sample Mode
*AVG, 176, 178, 180*
*INST, 176, 178, 180*
*MAX, 176*
*MIN, 176, 178, 180*
*SDEV, 176, 178, 180*
Sample Period, 179, 180
Starting Date, 184
Store Number of Samples, 176, 180
Triggering Events, 168, 169, 175
*ATIMER, 169, 173, 175*
*EXITZR, 175*
*SLPCHG, 170, 175*
*WTEMPW, 175*
DAS_HOLD_OFF, 114
data acquisition. *See* DAS System
**DATA INITIALIZED**, 77, 93, 257
DB-25M, 28, 192
DB-9F, 28, 192
DC Power, 52
DCPS, 165
Default Settings
COMM Ports, 57
DAS System, 169
Hessen Protocol, 161, 165
VARS, 114
**DIAG AIO**, 116
**DIAG AOUT**, 116
**DIAG ELEC**, 116
**DIAG FCAL**, 116
**DIAG I/O**, 116
**DIAG OPTIC**, 116
**DIAG TEST CHAN**, 116
Diagnostic Menu (DIAG), 96, 109, 284
Ain Calibrated, 120, 135
Analog I/O
*Aout Calibration Configuration, 120*
*AOUT Calibration Configuration, 126*
*AOUTCalibrated Configuration, 124*
*Conc_Out_1, 120*
*Conc_Out_2, 120*
*Conc_Out_3, 120*
Analog I/O Configuration, 116, 121, 123, 124, 126, 127, 129, 131, 133, 134, 135
ANALOG OUTPUT (Step Test), 284
Analog Output Step Test, 116
Dark Calikbration, 116
Electrical Test, 116
Flow Calibration, 116
Pressure Calibration, 116
SIGNAL I/O, 116
Test Chan Ouptut, 116
Test Output, 120
Dilution Ratio, 108
Set Up, 82
Display Precision, 114

DUAL, 100, 103, 104
DYN_SPAN, 114
DYN_ZERO, 114
Dynamic Span, 114
Dynamic Zero, 114

## *E*

EEPROM
  Disk on Chip, 178
Electric Test, 281
Electric Test Switch, 315
Electrical Connections, **46**–**61**
  AC Power, 46
  Analog Outputs, 47, 99
    *Current Loop, 130*
    *Voltage Ranges, 128*
  Communications connections, 54
  Control InputS, 51
  Ethernet, 25
  Modem, 192
  Serial/COMM Ports, 57
  Status Outputs, 50
Electrical Test, 116
Electro-Static Discharge, 35, 58, 329, 330
ENTR Button, 96, 181
Environmental Protection Agency(EPA), 75, 296
  Calibration, 94
Ethernet, 25, 26, 148, 189
Exhaust Gas, 42, 304
**Exhaust Gas Outlet**, 42, 64, 67, 69, 71, 73
EXIT Button, 96
EXITZR, 175
External Pump, 27

## *F*

FEP, 61, 197
Final Test and Validation Data Sheet, 78, 79, 218, 277
Flash Chip, 309
Front Panel, 37
  Concentration Field, 39
  **Display**, 116, 138
  Message Field, 39
  Mode Field, 39
  Status LEDs, 39
  Touch screen Definition Field, 39

## *G*

Gas Filter Correlation, 25, 258, 291, 292, 297, 299, 300, 310, 311, 315, 320, 323
  GFC Wheel, 76, 249, 258, 259, 260, 263, 264, 281, 282, 290, 291, 292, 299, 300, 310, 311, 314, 315
    *Heater, 315, 320*
    *Light Mask, 302, 311, 312*
    *Motor, 278, 282, 290, 291, 315, 317, 319*
    *Temperature, 77, 92, 93, 138, 276*
  GFC Wheel Troubleshooting, 290
  Schmidt Triggers, 312
  Temperature Control, 310
Gas Inlets
  Sample, 42
  **Span**, 42
  **ZERO AIR**, 42
Gas Outlets
  Exhaust, 42, 64, 67, 69, 71, 73
GFC Wheel, 26

## *H*

Hessen Flags
  Internal Span Gas Generator, 165
Hessen Protocol, 144, 156, 157, 160, 161, 165
  Activation, 159
  and Reporting Ranges, 162
  Default Settings, 161
  Gas List, 163, 164
  GAS LIST, 162
  ID Code, 166
  response Mode, 161
  Setup Parameters, 157
  Status Flag
    *Default Settings, 165*
    *Modes, 165*
    *Unassigned Flags, 165*
    *Unused Bits, 165*
    *Warnings, 165*
  Status Flags, 165
  types, 160
HIGH RANGE
  REMOTE, 52
Hold Off Period, 295
Hostname, 152

## *I*

$I^2C$ bus, 257, 258, 259, 263, 265, 275, 276, 279, 307, 315, 317
  Power Up Circuit, 320
Infrared Radiation (IR), 25, 77, 80, 92, 93, 137, 138, 219, 240, 249, 257, 258, 259, 260, 266, 274, 277, 280, 281, 282, 296, 297, 298, 299, 300, 302, 303, 310, 311, 312, 313, 314, 315, 316, 317, 318, 320, 324
Interferents, 80
Internal Pneumatics
  Basic, 268
  Basic Configuration, 65
  WITH OPTIONAL $CO_2$ SENSOR, 271
  WITH OPTIONAL $O_2$ SENSOR, 270
  Zero/Span Valves, 268
  Zero/Span Valves, 67
  Zero/Span Valves with Internal Scrubber, 74, 269
  Zero/Span/Shutoff and Internal Scrubber Option, 270
  Zero/Span/Shutoff Valves, 69, 269
  ZeroScrubber/Pressurized Span, 71

Internal Pump, 33, 61, 169, 251, 257, 271, 272, 273, 283, 289, 303, 304, 305, 320
**Internal Span Gas Generator**
AutoCal, 213
**Warning Messages**, 77, 78
Internal Zero Air (IZS), 42, 67, 69, 72, 74, 236, 237, 272, 280
Gas Flow Problems, 267
**IZS TEMP WARNING**, 78

## *M*

Machine ID, 60
Maintenance Schedule, 170
Measure Reference Ratio, 300
Menu Buttons
CAL, 94, 295
CALS, 94, 205, 295
CALZ, 94, 205
CONC, 114, 295
ENTR, 96, 181
EXIT, 96
MENUS
AUTO, 100, 105
DUAL, 100, 103, 104
SNGL, 80, 100, 102
Message Field, 39
Mode Field, 39
Modem, 192
Troubleshooting, 288
Motherboard, 77, 120, 130
MR Ratio, 92, 248, 249, 259, 277
Multidrop, 58, 60, 144, 156

## *N*

National Institute of Standards and Technology (NIST)
Standard Reference Materials (SRM), 75
*CO, 75*
NXCNC1, 173

## *O*

$O_2$, 31, 47, 48, 51, 75, 85, 89, 92, 93, 99, 114, 120, 138, 162, 165, 218, 223, 224, 225, 267, 304
**O2 ALARM1 WARN**, 78
**O2 ALARM2 WARN**, 78
$O_2$ CELL TEMP, 92
$O_2$ CELL TEMP WARNING, 93
$O_2$ OFFSET, 92
$O_2$ sensor, 47, 48, 51, 75, 85, 92, 93, 99, 138, 165, 223, 225, 267, 304
$O_2$ Sensor, 225
Calibration
*Procedure, 226*
*Setup, 223, 227*
*Span Gas Concentration, 224*
$O_2$ Sensor Option
Pneumatic Set Up for Calibration, 223
$O_2$ SLOPE, 92
**OC CELL TEMP WARN**, 78
OFFSET, 92, 130, 134, 248, 249, 260
Operating Modes, 116
Calibration Mode, 165
Diagnostic Mode (DIAG), 116
Sample Mode, 39, 114, 212
Secondaru Setup, 96
Optic Test, 116
Optical Bench, 252, 310, 319
Layout, 45
Optional Sensors
$CO_2$
*INTERNAL PNEUMATICS, 271*
$O_2$
*INTERNAL PNEUMATICS, 270*

## *P*

Particulate Filter, 249, 250, 257, 306
**PHOTO TEMP WARNING**, 77, 93, 257
Photometer
Temperature Limits, 77
PHT DRIVE, 92, 248, 249, 259
PMT Preamp PCA, 116
PMTDET, 169
Pneumatic Set Up, 61
Ambient Zero/ Ambient Span Valves, 205
Ambient Zero/Pressurized Span, 206
Basic
*Bottled Gas, 63*
Basic Model
*Bottled Gas, 200*
*Gas Dilution Calibrator, 65, 200*
Calibration
*with $CO_2$ Sensor, 227*
*with $O_2$ Sensor, 223*
Calibration Gasses, 74
Zero Scrubber/Pressurized Span Option, 70
Zero/Span Valves, 67
Zero/Span Valves with Internal Scrubber, 72
Zero/Span Valves with Internal Scrubber, 206
Zero/Span/Shutoff and Internal Scrubber Option, 207
Zero/Span/Shutoff Valves, 68
PNUMTC, 169
Predictive Diagnostics
Using DAS System, 170
PRES, 92, 248, 249, 251, 259
PRESSURE SPAN inlet, 67
PTEF, 64, 67, 69, 71, 73
PTFE, 33, 61, 197, 233, 250

## *R*

RANGE, 92, 120, 162, 259

RANGE1, 92, 162
AUTO, 105
RANGE2, 92, 162
AUTO, 105
**REAR BOARD NOT DET**, 77, 93, 165, 257
Recorder Offset, 134
Relay Board
Status LEDs, 265
Troubleshooting, 280
**RELAY BOARD WARN**, 77, 93, 257
relay PCA, 77
Reporting Range, 80, 94, 95, 98, 100, 102, 103, 105
Configuration, 95, 98
Dilution Feature, 108
Modes, 108
*AUTO, 105*
*DUAL, 103*
*SNGL, 102*
Upper Span Limit, 102, 104, 108
RJ45, 28
RS-232, 26, 56, 57, 58, 59, 60, 61, 90, 144, 147, 157, 168, 169, 183, 188, 189, 192, 232, 236, 287, 288, 318
Activity Indicators, 148
DCE & DTE, 56
RS-485, 26, 61, 144, 147, 318

## *S*

Safety Messages
Electric Shock, 46, 275, 276
General, 35, 46, 61, 130, 253
Qualiified Personnel, 253
SAMPLE FL, 92, 259
Sample Flow Sensor, 306
**SAMPLE FLOW WARN**, 77, 93, 165, 257
Sample Gas Line, 64, 66, 68, 70, 72
**Sample Inlet**, 42
Sample Mode, 39, 89, 114, 212, 234, 286
**SAMPLE PRESS WARN**, 77, 93, 165, 257
Sample Pressure Sensor, 306
SAMPLE TEMP, 92, 93, 165, 259, 275
**SAMPLE TEMP WARN**, 77, 93, 165
Schmidt Triggers, 312
Scubber
Zero Air, 198
Sensor Inputs, 283, 318
Bench Temperature, 319
Box Temperature, 319
CO Measure And Reference, 318
Sample Pressure And Flow, 318
Sample Temperature, 319
Thermistor Interface, 319
Wheel Temperature, 319
SERIAL I/O
BENCH_HEATER, 275
CO_MEASURE, 277
CO_REFERENCE, 277
PHT_DRIVE, 277
WHEEL_HEATER, 276
Serial I/O Ports
Modem, 192
Multidrop, 58, 60, 144
RS-232, 58, 96, 168, 169, 183
RS-485, 144
Shutoff Valve
Span Gas, 68
SLOPE, 92, 248, 249, 260
SLPCHG, 170, 175
SNGL, 80, 100, 102
$SO_2$, 78, 103
**$SO_2$ ALARM1 WARN**, 78
**$SO_2$ ALARM2 WARN**, 78
**SOURCE WARNING**, 77, 93, 165
SPAN CAL, 51, 67, 69, 71, 74, 248, 286
Remote, 52
Span Gas, 42, 64, 65, 66, 67, 68, 70, 72, 73, 75, 79, 94, 108, 165, 198, 202, 205, 209, 213, 224, 228, 240, 251, 257, 260, 272, 273, 274, 295
Dilution Feature, 108
Standard Reference Materials (SRM's) )
*CO Span Gas, 75*
**Span Inlet**, 42
Specifications, 31
STABIL, 92, 248, 249, 259, 277, 292, 293
STABIL_GAS, 114
stainless steel, 61, 197
Status LEDs, 317
$CO_2$ Sensor, 288
CPU, 263
Relay Board, 265
Sync/Demod Board, 264, 278
Status Outputs, 105, 319
Electrical Connections, 50
Pin Assignments, 51
SYNC, 165
Sync/Demod Board, 137, 219, 257, 258, 259, 281, 312, 313, 314, 315, 319, 324
Photo-Detector Temperature Control, 315
Status LEDs, 264, 278
Troubleshooting, 281, 292, 293
System
Default Settings, 169
SYSTEM OK, 51, 286
**SYSTEM RESET**, 77, 93, 165

## *T*

Teledyne Contact Information
**Email Address**, **296**
**Fax**, **296**
**Phone**, **296**
Technical Assistance, **296**
Website, **296**

*Software Downloads, 187*
Terminal Mode, 190
Command Syntax, 190
Computer mode, 144
Test Channel, 116, 120, 138
BENCH TEMP, 138
CHASSIS TEMP, 138
CO MEASURE, 138
CO REFERENCE, 138
NONE, 138
$O_2$ CELL TEMP, 138
PHT DRIVE, 138
SAMPLE FLOW, 138
SAMPLE PRESS, 138
SAMPLE TEMP, 138
WHEEL TEMP, 138
Test Function
RANGE, 120, 162
**Test Functions**, 91, 120, 138, 284, 285
BENCH TEMP, 92, 259
**BOX TEMP**, 77, 92, 165, 259, 275
CO MEAS, 92, 248, 249, 292, 293
CO REF, 92
$CO_2$ OFFSET, 92
$CO_2$ SLOPE, 92
Defined, 92
MR Ratio, 92, 248, 249, 259, 277
$O_2$ CELL TEMP, 92
$O_2$ OFFSET, 92
$O_2$ SLOPE, 92
OFFSET, 92, 248, 249, 260
PHT DRIVE, 92, 248, 249, 259
PRES, 92, 248, 249, 251, 259
RANGE, 92, 162, 259
RANGE1, 92, 162
*AUTO, 105*
RANGE2, 92, 162
*AUTO, 105*
SAMPLE FL, 92, 259
SAMPLE TEMP, 92, 93, 165, 259, 275
SLOPE, 92, 248, 249, 260
STABIL, 92, 248, 249, 259, 277, 292, 293
TIME, 92, 259
WHEEL TEMP, 92, 259
**TIME**, 92, 259
Touch screen Interface Electronics
Troubleshooting, 280

## *U*

Units of Measurement, 80, 107, 108

## *V*

Valve Options, 42, 208, 316
Ambient Zero/ Ambient Span Valves
*Pneumatic Set Up, 205*
Ambient Zero/Pressurized Span
*Pneumatic Set Up, 206*
Calibration Using, 205, 209
**Internal Span Gas Generator**
*AutoCal, 213*
*Hessen Flags, 165*
***Warning Messages**, 77, 78*
Shutoff Valve
*Span Gas, 68*
Zero Scrubber/Pressurized Span
*Pneumatic Set Up, 70*
Zero/Span, 274
Zero/Span Valve w/ Internal Scrubber, 274
Zero/Span Valves
*Internal Pneumatics, 67, 268*
*Pneumatic Set Up, 67*
Zero/Span Valves with Internal Scrubber
*Internal Pneumatics, 74, 269*
*Pneumatic Set Up, 72, 206*
Zero/Span with Remote Contact Closure, 212
Zero/Span/Shutoff Valves
*Internal Pneumatics, 69, 269*
*Pneumatic Set Up, 68*
Zero/Span/Shutoff Valves with Internal Scrubber
*Internal Pneumatics, 270*
*Pneumatic Set Up, 207*
VARS Menu, 96, 109, 111, 114, 169, 185
Variable Default Values, 114
Variable Names
*CLOCK_ADJ, 114*
*CONC_PRECISION, 114*
*DAS_HOLD_OFF, 114*
*DYN_SPAN, 114*
*DYN_ZERO, 114*
*STABIL_GAS, 114*
Ventilation Clearance, 36
Venting, 64, 66, 68, 70, 73
Exhaust Line, 64, 67, 69, 71, 73
Sample Gas, 64, 66, 68, 70, 73
Span Gas, 64, 66, 68, 73
Zero Air, 64, 66, 68, 73

## *W*

Warm-up Period, 76
Warnings, 76
**ANALOG CAL WARNING**, 77, 93
AZERO, 165
**BENCH TEMP** WARNING, 165
**BENCH TEMP WARNING**, 77, 93, 257
**BOX TEMP WARNING**, 77, 93, 165, 257
**CANNOT DYN SPAN**, 77, 93, 165, 257
**CANNOT DYN ZERO**, 77, 93, 165, 257
**CO2 ALRM1 WARN**, 78
**CO2 ALRM2 WARN**, 78
CONC ALRM1 WARNING, 93, 165
CONC ALRM2 WARNING, 93, 165
**CONFIG INITIALIZED**, 77, 93, 257
**DATA INITIALIZED**, 77, 93, 257
DCPS, 165
**IZS TEMP WARNING**, 78
**O2 ALRM1 WARN**, 78
**O2 ALRM2 WARN**, 78
**O2 CELL TEMP WARN**, 78
$O_2$ CELL TEMP WARNING, 93
**PHOTO TEMP WARNING**, 77, 93, 257
**REAR BOARD NOT DET**, 77, 93, 165, 257
**RELAY BOARD WARN**, 77, 93, 257
**SAMPLE FLOW WARN**, 77, 93, 165, 257
**SAMPLE PRESS WARN**, 77, 93, 165, 257

**SAMPLE TEMP WARN**, 77, 93, 165
**$SO_2$ ALRM1 WARN**, 78
**$SO_2$ ALRM2 WARN**, 78
**SOURCE WARNING**, 77, 93, 165
SYNC, 165
**SYSTEM RESET**, 77, 93, 165
**Wheel temp WARNING**, 77
WHEEL TEMP WARNING, 93, 165
Watch Dog Circuit, 317
WHEEL TEMP, 92, 259
**WHEEL TEMP WARNING**, 77, 93, 165
WTEMPW, 175

## *Z*

Zero Air, 42, 64, 65, 66, 67, 68, 70, 71, 72, 73, 74, 75, 79, 94, 198, 205, 231, 236, 237, 238, 240, 249, 259, 260, 272, 273, 274, 277, 281, 296
**ZERO AIR Inlet**, 42
ZERO CAL, 51, 52, 67, 69, 71, 74, 248, 286
Remote, 52
Zero Scrubber/Pressurized Span
Internal Pneumatics, 71
Zero/Span Valves, 212
Internal Pneumatics, 67, 268
Pneumatic Set Up, 67
Zero/Span Valves with Internal Scrubber
Internal Pneumatics, 74, 269
Pneumatic Set Up, 72, 206
Zero/Span/Shutoff Valves
Internal Pneumatics, 69, 269
Pneumatic Set Up, 68
Zero/Span/Shutoff Valves with Internal Scrubber
Internal Pneumatics, 270
Pneumatic Set Up, 207

This page intentionally left blank.

# APPENDIX A - Version Specific Software Documentation

APPENDIX A-1: SOFTWARE MENU TREES, REVISION L.8 ..... 2
APPENDIX A-2: SETUP VARIABLES FOR SERIAL I/O ..... 8
APPENDIX A-3: WARNINGS AND TEST FUNCTIONS ..... 21
APPENDIX A-4: SIGNAL I/O DEFINITIONS ..... 26
APPENDIX A-5: DAS TRIGGERS AND PARAMETERS ..... 31
APPENDIX A-6: TERMINAL COMMAND DESIGNATORS ..... 34
APPENDIX A-7: MODBUS REGISTER MAP ..... 35

**APPENDIX A-1: Software Menu Trees, Revision L.8**

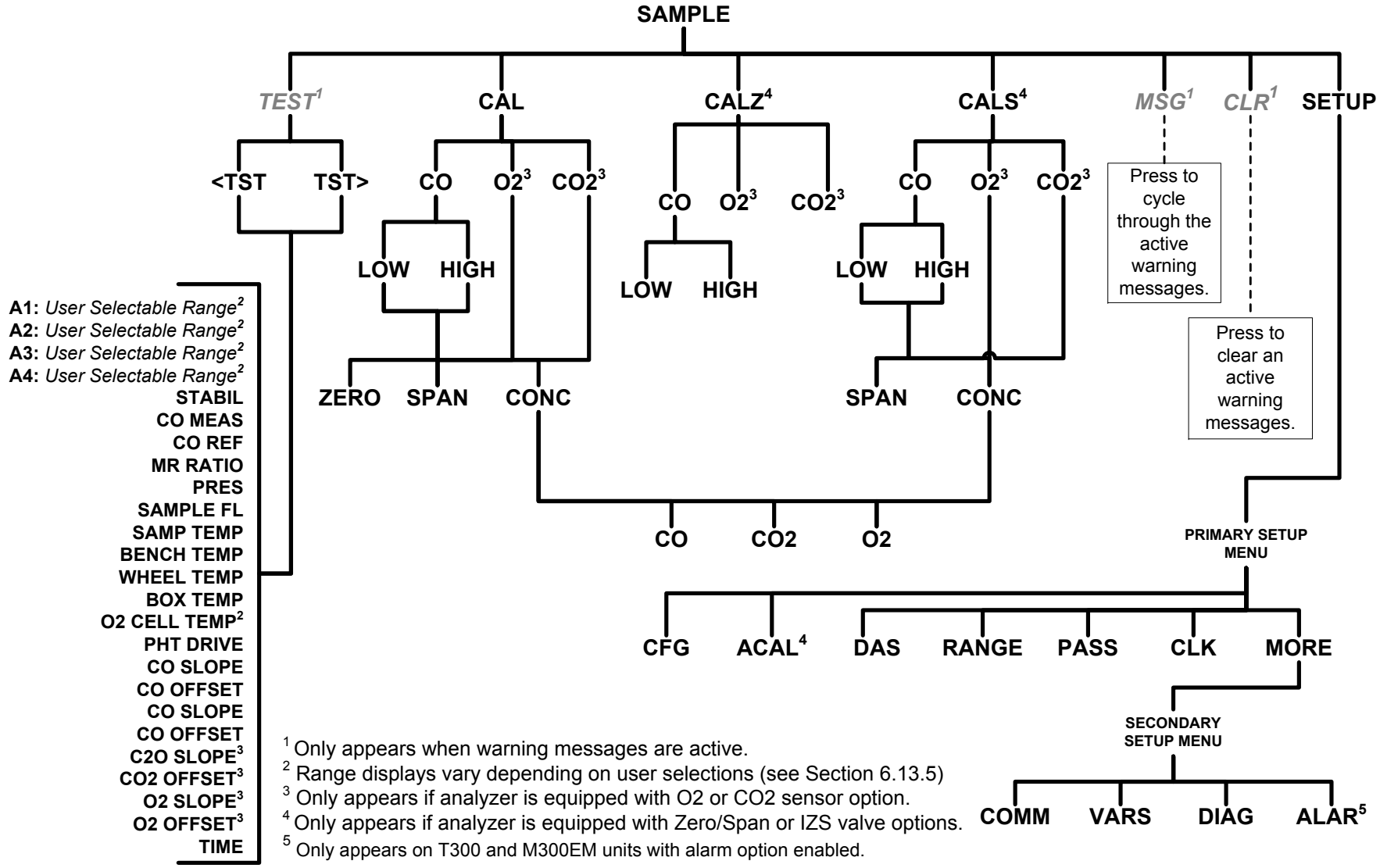


**Figure A-1: Basic Sample Display Menu**

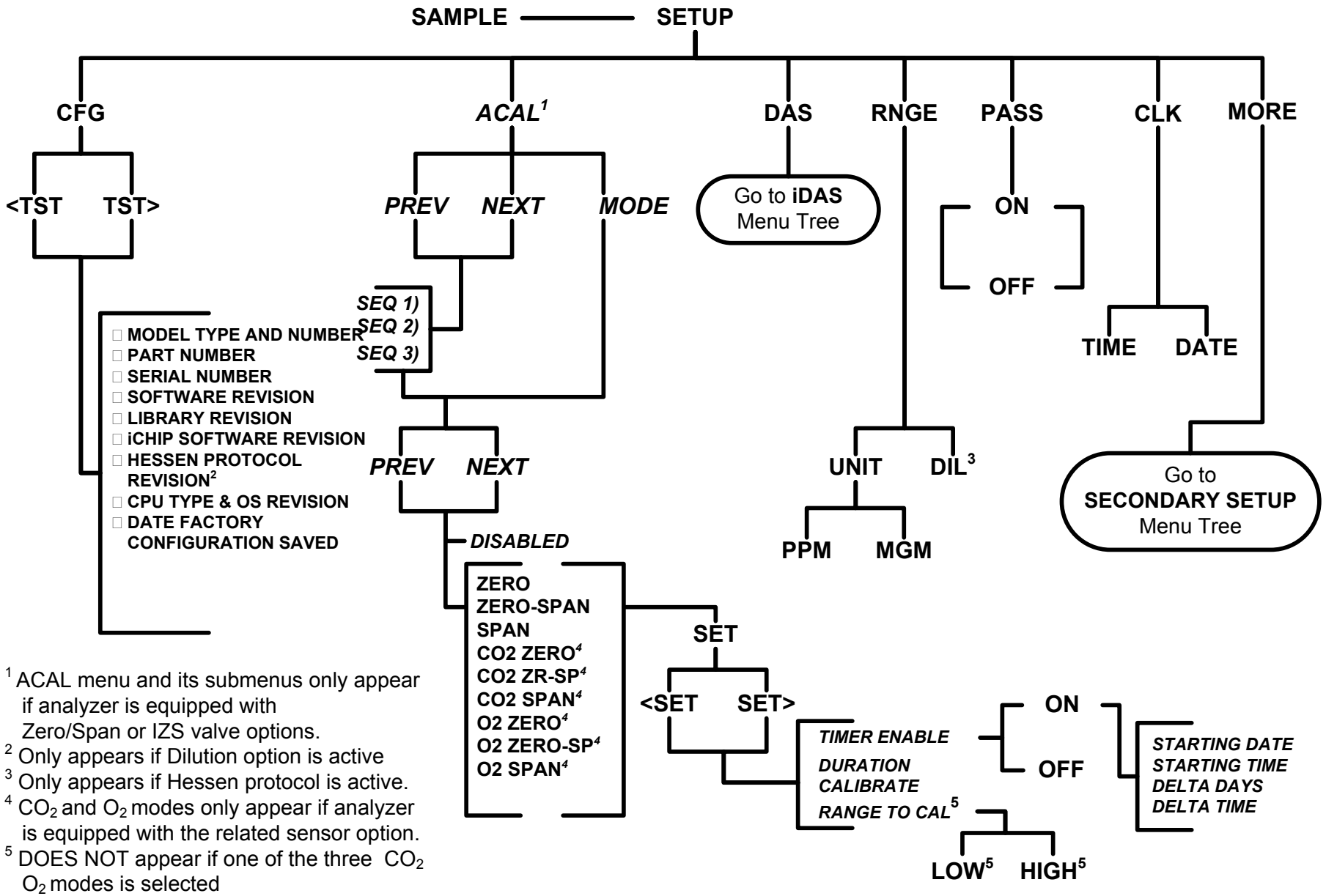


[1] ACAL menu and its submenus only appear if analyzer is equipped with Zero/Span or IZS valve options.
[2] Only appears if Dilution option is active
[3] Only appears if Hessen protocol is active.
[4] $CO_2$ and $O_2$ modes only appear if analyzer is equipped with the related sensor option.
[5] DOES NOT appear if one of the three $CO_2$ $O_2$ modes is selected

**Figure A-2: Primary Setup Menu (Except DAS)**

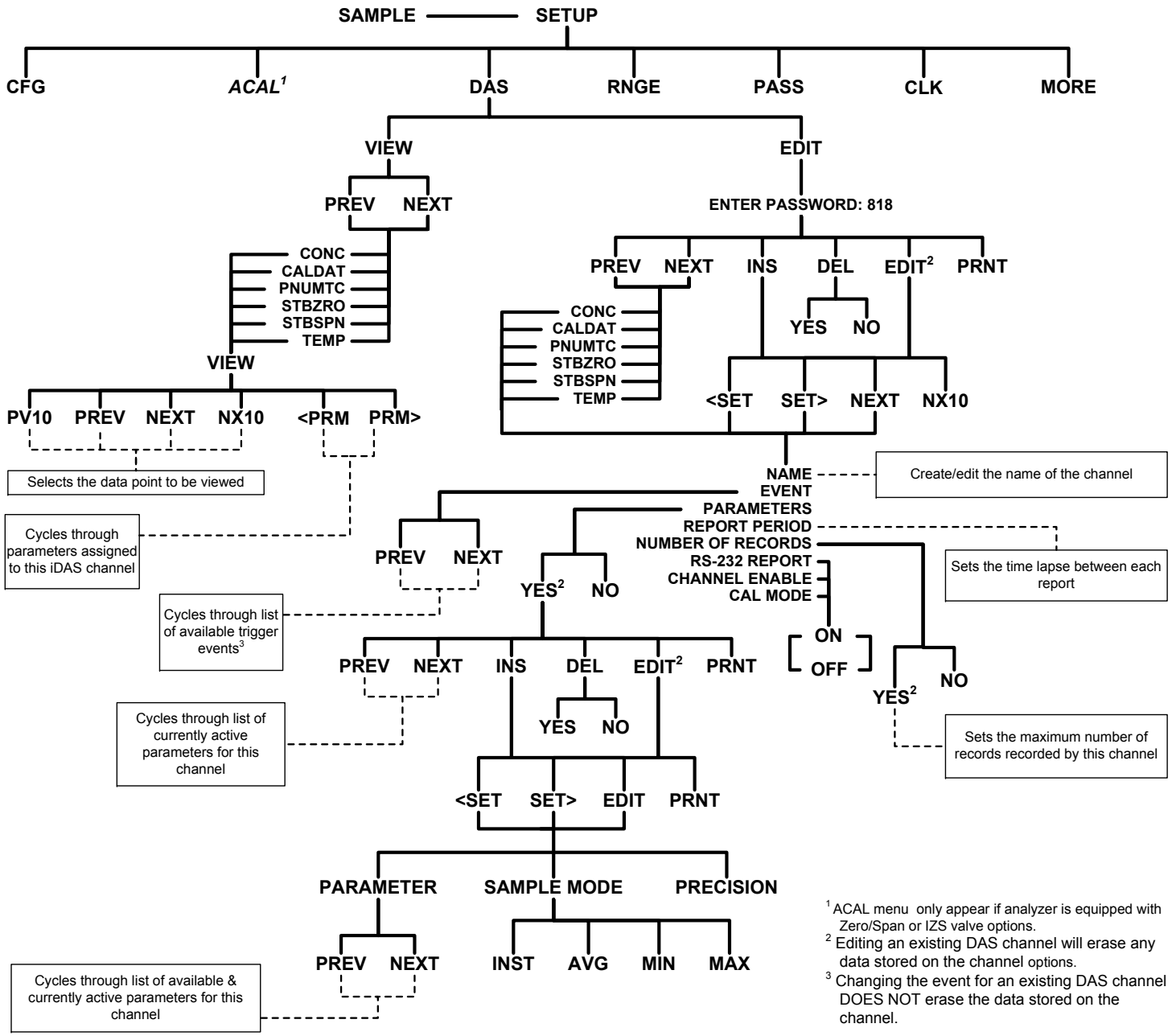


**Figure A-3: Primary Setup Menu → DAS Submenu**

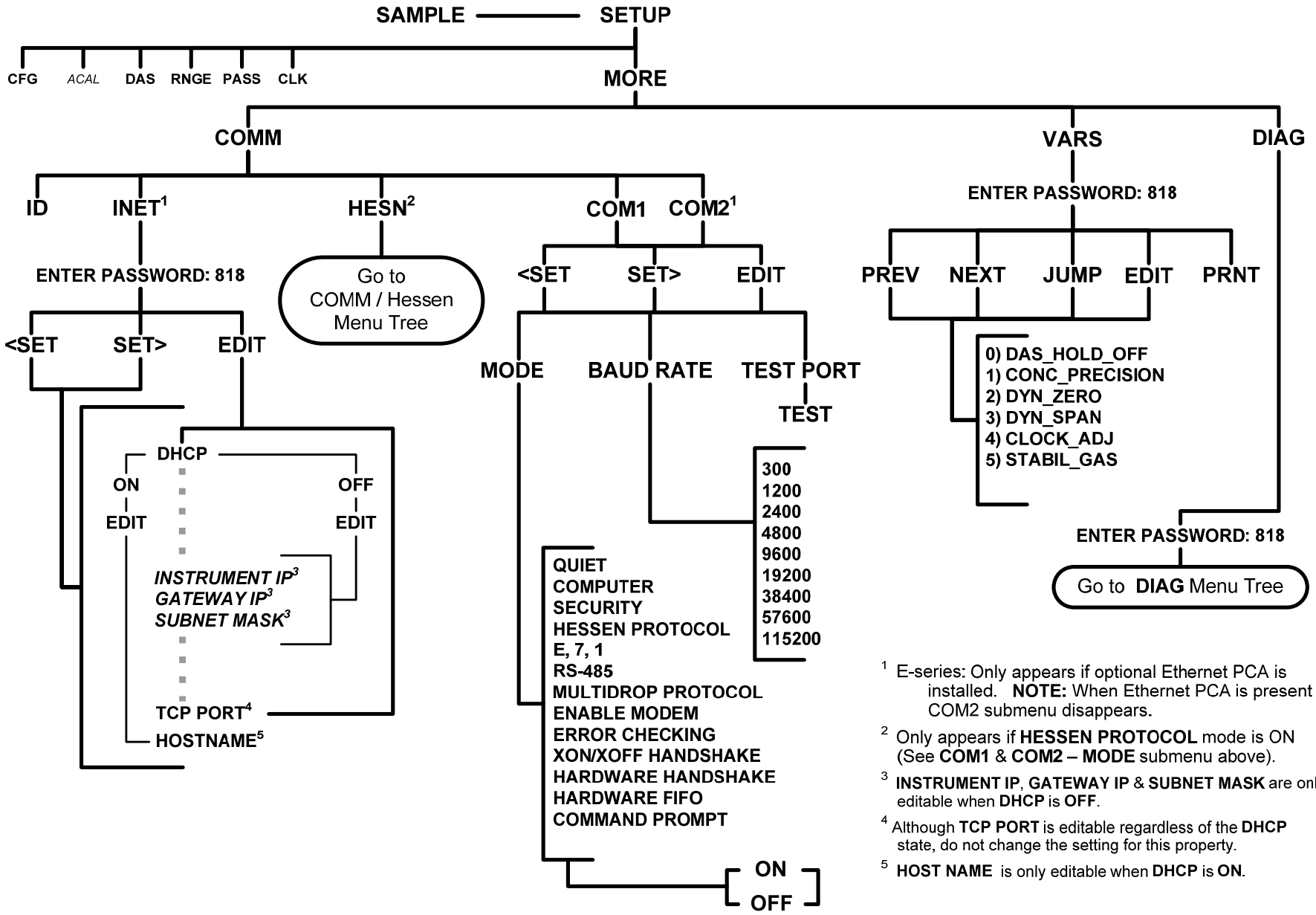


**Figure A-4: Secondary Setup Menu → COMM and VARS Submenus**

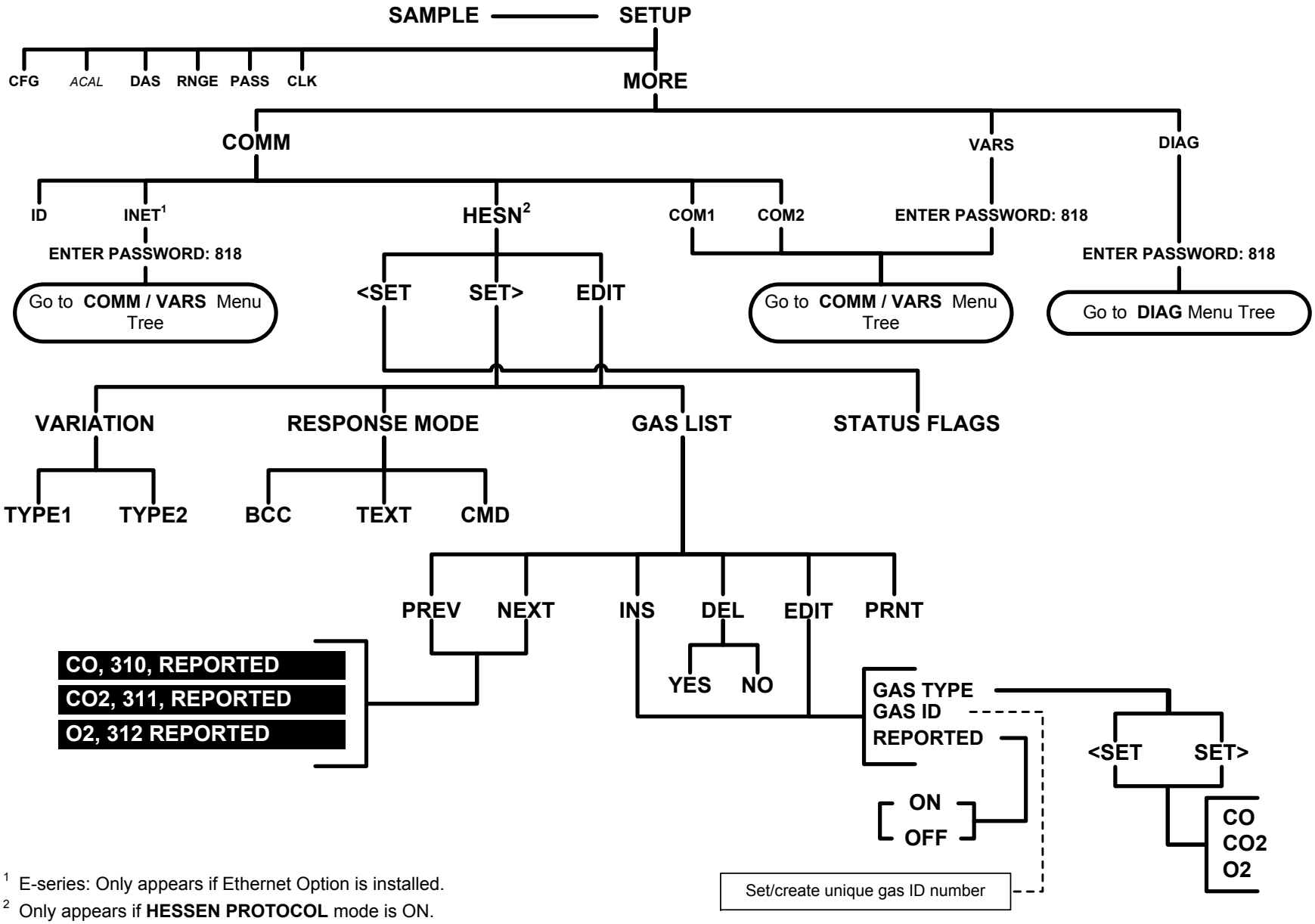


**Figure A-5: Secondary Setup Menu → Hessen Protocol Submenu**

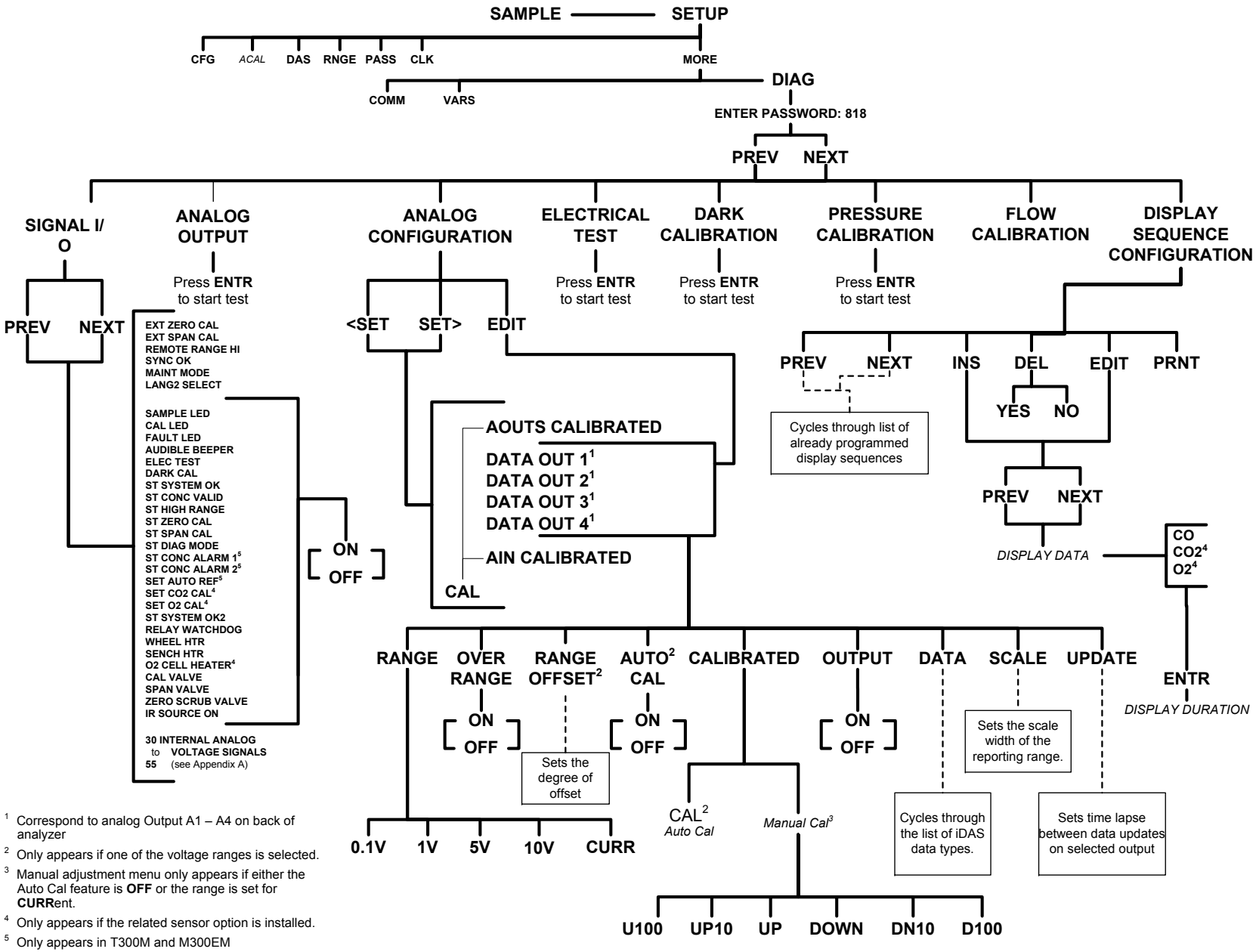


[1] Correspond to analog Output A1 – A4 on back of analyzer

[2] Only appears if one of the voltage ranges is selected.

[3] Manual adjustment menu only appears if either the Auto Cal feature is **OFF** or the range is set for **CURR**ent.

[4] Only appears if the related sensor option is installed.

[5] Only appears in T300M and M300EM

**Figure A-6: DIAG Menu**

## APPENDIX A-2: Setup Variables For Serial I/O

### Table A-1: T300/T300M and M300E/EM Setup Variables, Revision L.8

| Setup Variable | Numeric Units | Default Value | Value Range | Description |
|---|---|---|---|---|
| **Low Access Level Setup Variables (818 password)** | | | | |
| DAS_HOLD_OFF | Minutes | 15 | 0.5–20 | Duration of DAS hold off period. |
| CONC_PRECISION | — | 3 | AUTO,<br>0,<br>1,<br>2,<br>3,<br>4 | Number of digits to display to the right of the decimal point for concentrations on the display. |
| REM_CAL_DURATION [17] | Minutes | 20 | 1–120 | Duration of automatic calibration initiated from TAI protocol. |
| STABIL_GAS | — | CO [0] | CO,<br>CO2 [10],<br>O2 [14] | Selects gas for stability measurement. |
| DYN_ZERO | — | OFF | ON, OFF | *ON* enables remote dynamic zero calibration; *OFF* disables it. |
| DYN_SPAN | — | OFF | ON, OFF | *ON* enables remote dynamic span calibration; *OFF* disables it. |
| CLOCK_ADJ | Sec./Day | 0 | -60–60 | Time-of-day clock speed adjustment. |
| **Medium Access Level Setup Variables (929 password)** | | | | |
| LANGUAGE_SELECT | — | ENGL [0] | ENGL,<br>SECD,<br>EXTN | Selects the language to use for the user interface. |
| MAINT_TIMEOUT | Hours | 2 | 0.1–100 | Time until automatically switching out of software-controlled maintenance mode. |
| CONV_TIME | — | 33 MS [0] | 33 MS,<br>66 MS,<br>133 MS,<br>266 MS,<br>533 MS,<br>1 SEC,<br>2 SEC | Conversion time for measure/reference detector channel. |
| CO_DWELL | Seconds | 0.2 | 0.1–30 | Dwell time before taking measure or reference sample. |
| CO_SAMPLE | Samples | 1 | 1–30 | Number of samples to take in measure or reference mode. |
| PRE_FILT_SIZE [5, 19] | Samples | 16 | 1–50 | Moving average pre-filter size. |
| FILT_SIZE | Samples | 750,<br>720 [9, 12]<br>200 [3, 8]<br>1000 [19, 23] | 1–1000 | Moving average filter size. |

| Setup Variable | Numeric Units | Default Value | Value Range | Description |
|---|---|---|---|---|
| FILT_ASIZE | Samples | 48,<br>20 [3, 8],<br>40 [20, 22] | 1–1000 | Moving average filter size in adaptive mode. |
| FILT_DELTA | PPM | 4,<br>0.7 [5]<br>15 [3, 8]<br>0.15 [9, 12]<br>0.4 [19, 23]<br>0.2 [20, 22] | 1–1000 | Absolute change to trigger adaptive filter. |
| FILT_PCT | % | 10<br>5 [20, 22, 23] | 1–100 | Percent change to trigger adaptive filter. |
| FILT_DELAY | Seconds | 90,<br>72 [20, 22] | 0–180 | Delay before leaving adaptive filter mode. |
| FILT_ADAPT | — | ON | ON, OFF | *ON* enables adaptive filter; *OFF* disables it. |
| CO2_DWELL [10] | Seconds | 0.1 | 0.1–30 | Dwell time before taking each sample. |
| CO2_FILT_ADAPT [10] | — | ON | ON, OFF | ON enables $CO_2$ adaptive filter; OFF disables it. |
| CO2_FILT_SIZE [10] | Samples | 48 | 1–300 | $CO_2$ moving average filter size. |
| CO2_FILT_ASIZE [10] | Samples | 12 | 1–300 | $CO_2$ moving average filter size in adaptive mode. |
| CO2_FILT_DELTA [10] | % | 2 | 0.01–10 | Absolute $CO_2$ conc. change to trigger adaptive filter. |
| CO2_FILT_PCT [10] | % | 10 | 0.1–100 | Percent $CO_2$ conc. change to trigger adaptive filter. |
| CO2_FILT_DELAY [10] | Seconds | 90 | 0–300 | Delay before leaving $CO_2$ adaptive filter mode. |
| CO2_DIL_FACTOR [10] | — | 1 | 0.1–1000 | Dilution factor for $CO_2$. Used only if is dilution enabled with *FACTORY_OPT* variable. |
| O2_DWELL [14] | Seconds | 1 | 0.1–30 | Dwell time before taking each sample. |
| O2_FILT_ADAPT [14] | — | ON | ON, OFF | ON enables $O_2$ adaptive filter; OFF disables it. |
| O2_FILT_SIZE [14] | Samples | 60 | 1–500 | $O_2$ moving average filter size in normal mode. |
| O2_FILT_ASIZE [14] | Samples | 10 | 1–500 | $O_2$ moving average filter size in adaptive mode. |
| O2_FILT_DELTA [14] | % | 2 | 0.1–100 | Absolute change in $O_2$ concentration to shorten filter. |
| O2_FILT_PCT [14] | % | 2 | 0.1–100 | Relative change in $O_2$ concentration to shorten filter. |
| O2_FILT_DELAY [14] | Seconds | 20 | 0–300 | Delay before leaving $O_2$ adaptive filter mode. |
| O2_DIL_FACTOR [14] | — | 1 | 0.1–1000 | Dilution factor for $O_2$. Used only if is dilution enabled with *FACTORY_OPT* variable. |

| Setup Variable | Numeric Units | Default Value | Value Range | Description |
|---|---|---|---|---|
| USER_UNITS | — | PPM [0] | PPB,<br>PPM,<br>UGM,<br>MGM<br>% [4, 5, 9, 18]<br>PPM [3, 8]<br>MGM [3, 8] | Concentration units for user interface. |
| NEG_CONC_SUPPRESS | — | OFF,<br>ON [17] | OFF, ON | ON pegs negative concentrations at zero; OFF permits negative concentrations |
| DIL_FACTOR | — | 1 | 0.1–1000 | Dilution factor. Used only if is dilution enabled with *FACTORY_OPT* variable. |
| DARK_CAL_DURATION | Seconds | 180,<br>60 [4] | 10–600 | Duration of dark cal. First two-thirds is stabilization period; final third is measure period. |
| DARK_MEAS_MV | mV | 0 | -1000–1000 | Dark offset for measure reading. |
| DARK_REF_MV | mV | 0 | -1000–1000 | Dark offset for reference reading. |
| CO2_COMP_ENABLE | — | OFF | ON, OFF | ON enables $CO_2$ compensation; OFF disables it. |
| CO2_COMP_CONC | % | 0 | 0–20 | $CO_2$ concentration to compensate for. |
| SOURCE_DRIFT_ENAB [21] | — | OFF | ON, OFF | ON enables source drift compensation; OFF disables it. |
| SOURCE_DRIFT [21] | PPB/Day | 0 | -500–500 | Source drift compensation rate of change. |
| CO_CONST1 | — | 8000,<br>500 [15,20,22,23]<br>78.8 [9,12]<br>3020 [18]<br>500 [4,9,12]<br>39600 [8]<br>40000 [3] | 100–50000 | CO calculation constant. |
| CO_CONST2 | — | 0.2110<br>0.356 [20,22,23]<br>0.367 [15]<br>1.458 [9,12]<br>1.4625 [18]<br>1.448 [4]<br>0.192 [8]<br>0.187 [3]<br>0.1196 [24] | 0–10 | CO calculation constant. |
| ET_MEAS_GAIN | — | 1 | 0.0001–9.9999 | Electrical test gain factor for measure reading. |
| ET_REF_GAIN | — | 1 | 0.0001–9.9999 | Electrical test gain factor for reference reading. |

| Setup Variable | Numeric Units | Default Value | Value Range | Description |
|---|---|---|---|---|
| ET_TARGET_DET | mV | 4375 | 0–5000 | Target detector reading during electrical test. |
| ET_TARGET_CONC | PPM | 40,<br>400 [3, 8] | 1–9999.99 | Target concentration during electrical test. |
| ET_CONC_RANGE | Conc. | 50,<br>5000 [3, 8] | 0.1–50000 | D/A concentration range during electrical test. |
| STD_TEMP | ºK | 321 | 1–500 | Standard temperature for temperature compensation. |
| STD_PRESS | "Hg | 28.5,<br>28.7 [8],<br>28.8 [12, 18],<br>28.1 [4] | 1–50 | Standard pressure for pressure compensation. |
| BENCH_SET | ºC | 48<br>Warnings:<br>43–53 | 0–100 | Optical bench temperature set point and warning limits. |
| WHEEL_SET | ºC | 68,<br>62 [19,23]<br>Warnings:<br>63–73,<br>57–67 [19,23] | 0–100 | Wheel temperature set point and warning limits. |
| O2_CELL_SET [14] | ºC | 50<br>Warnings:<br>45–55 | 30–70 | $O_2$ sensor cell temperature set point and warning limits. |
| STD_O2_CELL_TEMP [14] | ºK | 323 | 1–500 | Standard $O_2$ cell temperature for temperature compensation. |
| ZERO_APPLY_IN_CAL [5] | — | ON | OFF, ON | *ON* applies auto-reference offset and dilution factor during zero/span calibration;<br>*OFF* disables both.<br>(Only applicable if *ZERO_ENABLE* is *ON*.) |
| ZERO_DWELL [3, 5, 8] | Seconds,<br>Minutes [5] | 7,<br>3 [5] | 1–60,<br>1–30 [5] | Dwell time after closing or opening zero scrubber valve. |
| ZERO_SAMPLES [3, 5, 8] | Samples | 15,<br>750 [5],<br>1000 [19] | 1–1000 | Number of zero samples to average. |
| ZERO_FILT_SIZE [3, 5, 8] | Samples | 5,<br>1 [5] | 1–100 | Auto-zero offset moving average filter size. |
| ZERO_LIMIT [3, 5, 8] | Ratio | 1.2,<br>1.15 [3, 8],<br>1 [5] | 0–5 | Minimum auto-zero ratio allowed; must be *greater* than this value to be valid. |
| ZERO_CAL [3, 5, 8] | Ratio | 1.18 | 0.5–5 | Calibrated auto-zero ratio. |

| Setup Variable | Numeric Units | Default Value | Value Range | Description |
|---|---|---|---|---|
| CO_TARG_ZERO1 | Conc. | 0 | -100.00–999.99 | Target CO concentration during zero offset calibration of range 1. |
| CO_TARG_MID1_1 | Conc. | 50 [5], 300 | 0.01–9999.99 | Target CO concentration during mid-point #1 calibration of range 1. |
| CO_TARG_MID2_1 | Conc. | 50 [5], 300 | 0.01–9999.99 | Target CO concentration during mid-point #2 calibration of range 1. |
| CO_SPAN1 | Conc. | 40, 400 [3, 8] | 0.01–9999.99 | Target CO concentration during internal span calibration of range 1. |
| CO_SLOPE1 | — | 1 | 0.001–999.999 | CO slope for range 1. |
| CO_OFFSET1 | — | 0 | -10–10 | CO offset for range 1. |
| CAL_BOX_TEMP1 | ºC | 30 | 0–100 | Calibrated box temperature for range 1. |
| CO_TARG_ZERO2 | Conc. | 0 | -100.00–999.99 | Target CO concentration during zero offset calibration of range 2. |
| CO_TARG_MID1_2 | Conc. | 50 [5], 300 | 0.01–9999.99 | Target CO concentration during mid-point #1 calibration of range 2. |
| CO_TARG_MID2_2 | Conc. | 50 [5], 300 | 0.01–9999.99 | Target CO concentration during mid-point #2 calibration of range 2. |
| CO_SPAN2 | Conc. | 40, 400 [3, 8] | 0.01–9999.99 | Target CO concentration during internal span calibration of range 2. |
| CO_SLOPE2 | — | 1 | 0.001–999.999 | CO slope for range 2. |
| CO_OFFSET2 | — | 0 | -10–10 | CO offset for range 2. |
| CAL_BOX_TEMP2 | ºC | 30 | 0–100 | Calibrated box temperature for range 2. |
| CO2_TARG_MID1_CONC [10] | % | 6, 800 [16] | 0.1–1000, 0.1–2000 [16] | Target $CO_2$ concentration during mid-point #1 calibration. |
| CO2_TARG_MID2_CONC [10] | % | 6, 800 [16] | 0.1–1000, 0.1–2000 [16] | Target $CO_2$ concentration during mid-point #2 calibration. |
| CO2_TARG_SPAN_CONC [10] | % | 12 | 0.1–1000, 0.1–2000 [16] | Target $CO_2$ concentration during span calibration. |
| CO2_SLOPE [10] | — | 1 | 0.5–5 | $CO_2$ slope. |
| CO2_OFFSET [10] | % | 0 | -10–10, -100–100 [16] | $CO_2$ offset. |
| O2_TARG_SPAN_CONC [14] | % | 20.95 | 0.1–100 | Target $O_2$ concentration during span calibration. |
| O2_SLOPE [14] | — | 1 | 0.5–2 | $O_2$ slope. |
| O2_OFFSET [14] | % | 0 | -10–10 | $O_2$ offset. |

| Setup Variable | Numeric Units | Default Value | Value Range | Description |
|---|---|---|---|---|
| RANGE_MODE | — | SNGL [0] | SNGL,<br>DUAL,<br>AUTO | Range control mode. |
| CONC_RANGE1 | Conc. | 50,<br>200 [6],<br>500 [3, 8] | 0.1–50000 | D/A concentration range 1. |
| CONC_RANGE2 [1] | Conc. | 50,<br>200 [6],<br>500 [3, 8] | 0.1–50000 | D/A concentration range 2. |
| CO2_RANGE [10] | % | 15 | 0.1–500,<br>0.1–2000 [16] | $CO_2$ concentration range. |
| O2_RANGE [14] | % | 100 | 0.1–500 | $O_2$ concentration range. |
| RS232_MODE | BitFlag | 0 | 0–65535 | RS-232 COM1 mode flags. Add values to combine flags.<br>1 = quiet mode<br>2 = computer mode<br>4 = enable security<br>8 = enable hardware handshaking<br>16 = enable Hessen protocol [11]<br>32 = enable multi-drop<br>64 = enable modem<br>128 = ignore RS-232 line errors<br>256 = disable XON / XOFF support<br>512 = disable hardware FIFOs<br>1024 = enable RS-485 mode<br>2048 = even parity, 7 data bits, 1 stop bit<br>4096 = enable command prompt<br>8192 = even parity, 8 data bits, 1 stop bit<br>16384 = enable dedicated MODBUS ASCII protocol<br>32678 = enable dedicated MODBUS RTU or TCP protocol<br>16384 = enable TAI protocol [17] |
| BAUD_RATE | — | 115200 [0] | 300,<br>1200,<br>2400,<br>4800,<br>9600,<br>19200,<br>38400,<br>57600,<br>115200 | RS-232 COM1 baud rate. |

| Setup Variable | Numeric Units | Default Value | Value Range | Description |
|---|---|---|---|---|
| MODEM_INIT | — | "AT Y0 &D0 &H0 &I0 S0=2 &B0 &N6 &M0 E0 Q1 &W0" [0] | Any character in the allowed character set. Up to 100 characters long. | RS-232 COM1 modem initialization string. Sent verbatim plus carriage return to modem on power up or manually. |
| RS232_MODE2 | BitFlag | 0 | 0–65535 | RS-232 COM2 mode flags.<br>*(Same settings as RS232_MODE.)* |
| BAUD_RATE2 | — | 19200 [0] | 300,<br>1200,<br>2400,<br>4800,<br>9600,<br>19200,<br>38400,<br>57600,<br>115200 | RS-232 COM2 baud rate. |
| MODEM_INIT2 | — | "AT Y0 &D0 &H0 &I0 S0=2 &B0 &N6 &M0 E0 Q1 &W0" [0] | Any character in the allowed character set. Up to 100 characters long. | RS-232 COM2 modem initialization string. Sent verbatim plus carriage return to modem on power up or manually. |
| RS232_PASS | Password | 940331 | 0–999999 | RS-232 log on password. |
| MACHINE_ID | ID | 300,<br>320 [4] | 0–9999 | Unique ID number for instrument. |
| COMMAND_PROMPT | — | "Cmd> " [0] | Any character in the allowed character set. Up to 100 characters long. | RS-232 interface command prompt. Displayed only if enabled with *RS232_MODE* variable. |

| Setup Variable | Numeric Units | Default Value | Value Range | Description |
|---|---|---|---|---|
| TEST_CHAN_ID | — | NONE [0] | NONE,<br>CO MEASURE,<br>CO REFERENCE,<br>VACUUM PRESSURE,<br>SAMPLE PRESSURE,<br>SAMPLE FLOW,<br>SAMPLE TEMP,<br>BENCH TEMP,<br>WHEEL TEMP,<br>O2 CELL TEMP [14],<br>CHASSIS TEMP,<br>PHT DRIVE,<br>TEMP4 [5] | Diagnostic analog output ID. |
| REMOTE_CAL_MODE | — | LOW [0] | LOW,<br>HIGH,<br>CO2 [10],<br>O2 [14] | CO range or other gas to calibrate during contact closure or Hessen calibration. |
| PASS_ENABLE | — | OFF | ON, OFF | *ON* enables passwords; *OFF* disables them. |
| STABIL_FREQ | Seconds | 10<br>120 [19, 23] | 1–300 | Stability measurement sampling frequency. |
| STABIL_SAMPLES | Samples | 25 | 2–40 | Number of samples in concentration stability reading. |
| PHOTO_TEMP_SET | mV | 2500<br>Warnings:<br>250–4750 | 0–5000 | Photometer temperature warning limits. Set point is not used. |
| SAMP_PRESS_SET | In-Hg | 29.92<br>Warnings:<br>15–32 | 0–100 | Sample pressure warning limits. Set point is not used. |

| Setup Variable | Numeric Units | Default Value | Value Range | Description |
|---|---|---|---|---|
| SAMP_FLOW_SET | cc/m | 800,<br>2000 [13]<br>1800 [5,19]<br>Warnings:<br>640–960,<br>1400–2200 [5,19]<br>1500–2500 [13] | 0–5000 | Sample flow warning limits. Set point is not used. |
| SAMP_FLOW_SLOPE | — | 1<br>4.5 [5,19] | 0.001–100 | Slope term to correct sample flow rate. |
| VAC_SAMP_RATIO | — | 0.53,<br>0.61 [13] | 0.1–2 | Maximum vacuum pressure / sample pressure ratio for valid sample flow calculation. |
| PURGE_PRESS_SET | PSIG | 7.5<br>Warnings:<br>2.5–12.5 | 0–100 | Purge pressure warning limits. Set point is not used. |
| SAMP_TEMP_SET | ºC | 30<br>Warnings:<br>10.1–100 | 0–100 | Sample temperature warning limits. Set point is not used. |
| BOX_SET | ºC | 30<br>Warnings:<br>5–48 | 0–100 | Internal box temperature warning limits. Set point is not used. |
| BOX2_SET [5],<br>OVEN_SET [19,23] | ºC | 30<br>46 [19,23]<br>Warnings:<br>25–35<br>41–51 [19,23] | 0–100 | Internal box temperature #2 / oven set point and warning limits. |
| BOX2_CYCLE [5],<br>OVEN_CYCLE [19,23] | Seconds | 10 | 0.5–30 | Internal box temperature #2/oven control cycle period. |
| BOX2_PROP [5],<br>OVEN_PROP [19,23] | 1/ºC | 1<br>0.5 [19,23] | 0–100 | Internal box temperature #2/oven PID proportional coefficient. Proportional band is the reciprocal of this setting. |
| BOX2_INTEG [5],<br>OVEN_INTEG [19,23] | — | 0.1<br>0.02 [19,23] | 0–100 | Internal box temperature #2/oven PID integral coefficient. |
| BOX2_DERIV [5],<br>OVEN_DERIV [19,23] | — | 0 | 0–100 | Internal box temperature #2/oven PID derivative coefficient. |
| BENCH_CYCLE | Seconds | 2<br>15 [19,23] | 0.5–30 | Optical bench temperature control cycle period. |
| BENCH_PROP | 1/ºC | 5<br>1.5 [19,23] | 0–100 | 100V optical bench temperature PID proportional coefficient. Proportional band is the reciprocal of this setting. |
| BENCH_INTEG | — | 0.5<br>1.5 [19,23] | 0–100 | 100V optical bench temperature PID integral coefficient. |

| Setup Variable | Numeric Units | Default Value | Value Range | Description |
|---|---|---|---|---|
| BENCH_DERIV | — | 2<br>0 [19,23] | 0–100 | 100V optical bench temperature PID derivative coefficient. |
| BENCH_PROP2 | 1/ºC | 5<br>0.75 [19,23] | 0–100 | 200V optical bench temperature PID proportional coefficient. Proportional band is the reciprocal of this setting. |
| BENCH_INTEG2 | — | 0.5<br>0.75 [19,23] | 0–100 | 200V optical bench temperature PID integral coefficient. |
| BENCH_DERIV2 | — | 2<br>0 [19,23] | 0–100 | 200V optical bench temperature PID derivative coefficient. |
| WHEEL_CYCLE | Seconds | 4<br>2 [4,9,12,18]<br>8 [19,23] | 0.5–30 | Wheel temperature control cycle period. |
| WHEEL_PROP | 1/ºC | 1<br>0.3 [19,23] | 0–100 | 100V wheel temperature PID proportional coefficient. Proportional band is the reciprocal of this setting. |
| WHEEL_INTEG | — | 0.135<br>0.035 [4,9,12,18]<br>0.06 [19,23] | 0–100 | 100V wheel temperature PID integral coefficient. |
| WHEEL_DERIV | — | 2<br>0 [19,23] | 0–100 | 100V wheel temperature PID derivative coefficient. |
| WHEEL_PROP2 | 1/ºC | 1<br>0.1 [19,23] | 0–100 | 200V wheel temperature PID proportional coefficient. Proportional band is the reciprocal of this setting. |
| WHEEL_INTEG2 | — | 0.135<br>0.035 [4,9,12,18]<br>0.01 [19,23] | 0–100 | 200V wheel temperature PID integral coefficient. |
| WHEEL_DERIV2 | — | 2<br>0 [19,23] | 0–100 | 200V wheel temperature PID derivative coefficient. |
| O2_CELL_CYCLE [14] | Seconds | 10 | 0.5–30 | $O_2$ cell temperature control cycle period. |
| O2_CELL_PROP [14] | — | 1 | 0–10 | $O_2$ cell PID temperature control proportional coefficient. |
| O2_CELL_INTEG [14] | — | 0.1 | 0–10 | $O_2$ cell PID temperature control integral coefficient. |
| O2_CELL_DERIV [14] | — | 0 (disabled) | 0–10 | $O_2$ cell PID temperature control derivative coefficient. |
| BOX_TEMP_GAIN | PPB/DegC | 0,<br>5 [9] | 0–100 | Gain factor for box temperature compensation of concentration. |
| TPC_ENABLE | — | ON | OFF, ON | *ON* enables temperature/ pressure compensation; *OFF* disables it. |
| CONC_LIN_ENABLE | — | ON | OFF, ON | *ON* enables concentration linearization; *OFF* disables it. |
| STAT_REP_PERIOD [17] | Seconds | 1 | 0.5–120 | TAI protocol status message report period. |

| Setup Variable | Numeric Units | Default Value | Value Range | Description |
|---|---|---|---|---|
| SERIAL_NUMBER | — | "00000000 " [0] | Any character in the allowed character set. Up to 100 characters long. | Unique serial number for instrument. |
| DISP_INTENSITY | — | HIGH [0] | HIGH,<br>MED,<br>LOW,<br>DIM | Front panel display intensity. |
| I2C_RESET_ENABLE | — | ON | OFF, ON | *ON* enables automatic reset of the $I^2C$ bus in the event of communication failures; *OFF* disables automatic reset. |
| CLOCK_FORMAT | — | "TIME=%H:%M:%S" | Any character in the allowed character set. Up to 100 characters long. | Time-of-day clock format flags. Enclose value in double quotes (") when setting from the RS-232 interface.<br>"%a" = Abbreviated weekday name.<br>"%b" = Abbreviated month name.<br>"%d" = Day of month as decimal number (01 – 31).<br>"%H" = Hour in 24-hour format (00 – 23).<br>"%I" = Hour in 12-hour format (01 – 12).<br>"%j" = Day of year as decimal number (001 – 366).<br>"%m" = Month as decimal number (01 – 12).<br>"%M" = Minute as decimal number (00 – 59).<br>"%p" = A.M./P.M. indicator for 12-hour clock.<br>"%S" = Second as decimal number (00 – 59).<br>"%w" = Weekday as decimal number (0 – 6; Sunday is 0).<br>"%y" = Year without century, as decimal number (00 – 99).<br>"%Y" = Year with century, as decimal number.<br>"%%" = Percent sign. |
| ALARM_TRIGGER [3,4] | Cycles | 10 | 1–100 | Concentration alarm trigger sensitivity adjustment. |
| REF_SDEV_LIMIT | mV | 50 | 0.1–500 | Reference detector standard deviation must be below this limit to switch out of startup mode. |

| Setup Variable | Numeric Units | Default Value | Value Range | Description |
|---|---|---|---|---|
| REF_SOURCE_LIMIT | mV | 3000 (not used)<br>Warnings:<br>1100–4800,<br>25–4800 [3, 4, 15] | 1–5000 | Reference source warning limits. Set point is not used. |
| FACTORY_OPT | BitFlag | 512,<br>768 [5] | 0–65535 | Factory option flags. Add values to combine flags.<br>1 = enable dilution factor<br>2 = zero/span valves installed<br>4 = enable conc. alarms<br>8 = enable linearity adjustment factor<br>16 = display units in concentration field<br>32 = enable software-controlled maintenance mode<br>64 [3, 5] = span valve installed<br>128 = enable switch-controlled maintenance mode<br>256 = compute only offset during zero calibration<br>512 = 220 V A/C power<br>1024 = non-zero offset calibration (linearity adjustment must also be enabled)<br>2048 = enable Internet option [7]<br>4096 = use “old” style numeric data entry menus when editing conc. table<br>8192 = locate high range and zero cal. status outputs on relays |

| Setup Variable | Numeric Units | Default Value | Value Range | Description |
|---|---|---|---|---|
| 0 | Enclose value in double quotes (") when setting from the RS-232 interface | | | |
| 1 | Multi-range modes | | | |
| 2 | Hessen protocol | | | |
| 3 | T300H, M300EH | | | |
| 4 | T360, M360E | | | |
| 5 | T300U, M300EU | | | |
| 6 | Fixed range special | | | |
| 7 | iChip option (E-Series) | | | |
| 8 | T300M, M300EM | | | |
| 9 | GFC7000E | | | |
| 10 | $CO_2$ option | | | |
| 11 | Must power-cycle instrument for these options to take effect | | | |
| 12 | T360U, M360EU | | | |
| 13 | Riken Keiki special | | | |
| 14 | $O_2$ option | | | |
| 15 | T320, M320E | | | |
| 16 | $CO_2$ PPM sensor | | | |
| 17 | TAI protocol | | | |
| 18 | T360M, M360EM | | | |
| 19 | T300U2, M300EU2 | | | |
| 20 | T320U, M320EU | | | |
| 21 | Source drift compensation option | | | |
| 22 | GFC7002EU | | | |
| 23 | T320U2, M320EU2 | | | |
| 24 | $N_2O$ compensation option | | | |

## APPENDIX A-3: Warnings and Test Functions

### Table A-2: T300/T300M and M300E/EM Warning Messages, Revision L.8

| Name [1] | Message Text | Description |
|---|---|---|
| **Warnings** | | |
| WSYSRES | SYSTEM RESET | Instrument was power-cycled or the CPU was reset. |
| WDATAINIT | DATA INITIALIZED | Data storage was erased. |
| WCONFIGINIT | CONFIG INITIALIZED | Configuration storage was reset to factory configuration or erased. |
| WCONCALARM1 | CONC ALARM 1 WARN | Concentration limit 1 exceeded. |
| WCONCALARM2 | CONC ALARM 2 WARN | Concentration limit 2 exceeded. |
| WSOURCE | SOURCE WARNING | Reference reading minus dark offset outside of warning limits specified by *REF_SOURCE_LIMIT* variable. |
| WAUTOZERO [4, 5] | AZERO WARN 1.001 | Auto-reference ratio below limit specified by *ZERO_LIMIT* variable. |
| WBENCHTEMP | BENCH TEMP WARNING | Bench temperature outside of warning limits specified by *BENCH_SET* variable. |
| WWHEELTEMP | WHEEL TEMP WARNING | Wheel temperature outside of warning limits specified by *WHEEL_SET* variable. |
| WO2CELLTEMP [10] | O2 CELL TEMP WARN | $O_2$ sensor cell temperature outside of warning limits specified by *O2_CELL_SET* variable. |
| WSAMPFLOW [6] | SAMPLE FLOW WARN | Sample flow outside of warning limits specified by *SAMP_FLOW_SET* variable. |
| WSAMPPRESS | SAMPLE PRESS WARN | Sample pressure outside of warning limits specified by *SAMP_PRESS_SET* variable. |
| WSAMPTEMP | SAMPLE TEMP WARN | Sample temperature outside of warning limits specified by *SAMP_TEMP_SET* variable. |
| WPURGEPRESS [9] | PURGE PRESS WARN | Purge pressure outside of warning limits specified by *PURGE_PRESS_SET* variable. |
| WBOXTEMP | BOX TEMP WARNING | Internal box temperature outside of warning limits specified by *BOX_SET* variable. |
| WBOXTEMP2 [4] | BOX TEMP2 WARNING | Internal box temperature #2 outside of warning limits specified by *BOX2_SET* variable. |
| WOVENTEMP [11] | OVEN TEMP WARNING | Oven temperature outside of warning limits specified by *OVEN_SET* variable. |
| WPHOTOTEMP | PHOTO TEMP WARNING | Photometer temperature outside of warning limits specified by *PHOTO_TEMP_SET* variable. |
| WDYNZERO | CANNOT DYN ZERO | Contact closure zero calibration failed while *DYN_ZERO* was set to *ON*. |
| WDYNSPAN | CANNOT DYN SPAN | Contact closure span calibration failed while *DYN_SPAN* was set to *ON*. |
| WREARBOARD | REAR BOARD NOT DET | Rear board was not detected during power up. |

| Name [1] | Message Text | Description |
|---|---|---|
| WRELAYBOARD | RELAY BOARD WARN | Firmware is unable to communicate with the relay board. |
| WFRONTPANEL[12] | FRONT PANEL WARN | Firmware is unable to communicate with the front panel. |
| WANALOGCAL | ANALOG CAL WARNING | The A/D or at least one D/A channel has not been calibrated. |

[1] The name is used to request a message via the RS-232 interface, as in “T BOXTEMP”

[2] Engineering software

[3] Current instrument units

[4] T300U, M300EU

[5] T300H, M300EH

[6] Except T360U, M360EU (APR version)

[7] T360, M360E

[8] Sample pressure or differential pressure flow measurement option

[9] GFC7000E

[10] $O_2$ option

[11] T300U2, T320U2, M300EU2, M320EU2

[12] Applies to E-Series only

**Table A-3: T300/T300M and M300E/EM Test Functions, Revision L.8**

| TEST FUNCTION NAME | MESSAGE TEXT | DESCRIPTION |
|---|---|---|
| RANGE | RANGE=50.0 PPM [3]<br>CO RANGE=50.0 PPM [3, 7] | D/A range in single or auto-range modes. |
| RANGE1 | RANGE1=50.0 PPM [3]<br>CO RANGE1=50.0 PPM [3, 7] | D/A #1 range in dual range mode. |
| RANGE2 | RANGE2=50.0 PPM [3]<br>CO RANGE2=50.0 PPM [3, 7] | D/A #2 range in dual range mode. |
| CO2RANGE | CO2 RANGE=20 % [7] | $CO_2$ range. |
| O2RANGE | O2 RANGE=100 % [10] | $O_2$ range. |
| STABILITY | STABIL=0.0 PPM [3]<br>CO STB=0.0 PPM [3, 7, 10]<br>CO2 STB=0.0 % [7]<br>O2 STB=0.0 % [10] | Concentration stability (standard deviation based on setting of *STABIL_FREQ* and *STABIL_SAMPLES*). |
| RESPONSE [2] | RSP=0.20(0.00) SEC | Instrument response. Length of each signal processing loop. Time in parenthesis is standard deviation. |
| COMEAS | CO MEAS=4125.0 MV | Detector measure reading. |
| COREF | CO REF=3750.0 MV | Detector reference reading. |
| MRRATIO | MR RATIO=1.100 | Measure/reference ratio. |
| AUTOZERO [4, 5] | AZERO RATIO=1.234 | Measure/reference ratio during auto-reference. |
| SAMPPRESS | PRES=29.9 IN-HG-A | Sample pressure. |
| PURGEPRESS [9] | PURGE=7.5 PSIG | Purge pressure |
| VACUUM [8] | VAC=6.8 IN-HG-A | Vacuum pressure. |
| SAMPFLOW [6] | SAMP FL=751 CC/M | Sample flow rate. |
| SAMPTEMP | SAMPLE TEMP=26.8 C | Sample temperature. |
| BENCHTEMP | BENCH TEMP=48.1 C | Bench temperature. |
| WHEELTEMP | WHEEL TEMP=68.1 C | Wheel temperature. |
| O2CELLTEMP [10] | O2 CELL TEMP=50.2 C | $O_2$ sensor cell temperature. |
| BOXTEMP | BOX TEMP=26.8 C | Internal box temperature. |
| BOXTEMP2 [4] | BOX TEMP2=29.6 C | Internal box temperature #2. |
| OVENTEMP [11] | OVEN TEMP=30.1 C | Oven temperature |
| PHOTOTEMP | PHT DRIVE=2500.0 MV | Photometer temperature. |
| COSLOPE | SLOPE=1.000<br>CO SLOPE=1.000 [7] | CO slope for current range, computed during zero/span calibration. |
| COSLOPE1 | SLOPE1=1.000<br>CO SLOPE1=1.000 [7] | CO slope for range #1 in dual range mode, computed during zero/span calibration. |
| COSLOPE2 | SLOPE2=1.000<br>CO SLOPE2=1.000 [7] | CO slope for range #2 in dual range mode, computed during zero/span calibration. |
| COOFFSET | OFFSET=0.000<br>CO OFFSET=0.000 [7] | CO offset for current range, computed during zero/span calibration. |
| COOFFSET1 | OFFSET1=0.000<br>CO OFFSET1=0.000 [7] | CO offset for range #1 in dual range mode, computed during zero/span calibration. |

| TEST FUNCTION NAME | MESSAGE TEXT | DESCRIPTION |
|---|---|---|
| COOFFSET2 | OFFSET2=0.000<br>CO OFFSET2=0.000 [7] | CO offset for range #2 in dual range mode, computed during zero/span calibration. |
| CO2SLOPE [7] | CO2 SLOPE=1.000 | $CO_2$ slope, computed during zero/span calibration. |
| CO2OFFSET [7] | CO2 OFFSET=0.000 | $CO_2$ offset, computed during zero/span calibration. |
| O2SLOPE [10] | O2 SLOPE=0.980 | $O_2$ slope, computed during zero/span calibration. |
| O2OFFSET [10] | O2 OFFSET=1.79 % | $O_2$ offset, computed during zero/span calibration. |
| CO | CO=17.7 PPM [3] | CO concentration for current range. |
| CO2 [7] | CO2=15.0 % | $CO_2$ concentration. |
| O2 [10] | O2=0.00 % | $O_2$ concentration. |
| TESTCHAN | TEST=1751.4 MV | Value output to *TEST_OUTPUT* analog output, selected with *TEST_CHAN_ID* variable. |
| CLOCKTIME | TIME=09:52:20 | Current instrument time of day clock. |
| RANGE(s) | User Configurable | |
| CO2RANGE | CO2 RANGE=20 % [1] | $CO_2$ range. |
| O2RANGE | O2 RANGE=100 % [2] | $O_2$ range. |
| STABILITY | STABIL=0.0 PPM<br>CO STB=0.0 PPM [1, 2]<br>CO2 STB=0.0 % [1]<br>O2 STB=0.0 % [2] | Concentration stability (standard deviation based on setting of *STABIL_FREQ* and *STABIL_SAMPLES*). |
| COMEAS | CO MEAS=4125.0 MV | Detector measure reading. |
| COREF | CO REF=3750.0 MV | Detector reference reading. |
| MRRATIO | MR RATIO=1.100 | Measure/reference ratio. |
| SAMPPRESS | PRES=29.9 IN-HG-A | Sample pressure. |
| SAMPFLOW | SAMP FL=751 CC/M | Sample flow rate. |
| SAMPTEMP | SAMPLE TEMP=26.8 C | Sample temperature. |
| BENCHTEMP | BENCH TEMP=48.1 C | Bench temperature. |
| WHEELTEMP | WHEEL TEMP=68.1 C | Wheel temperature. |
| O2CELLTEMP [2] | O2 CELL TEMP=50.2 C | $O_2$ sensor cell temperature. |
| BOXTEMP | BOX TEMP=26.8 C | Internal chassis temperature. |
| PHOTOTEMP | PHT DRIVE=2500.0 MV | Photometer temperature. |
| COSLOPE | SLOPE=1.000<br>CO SLOPE=1.000 [1] | CO slope for current range, computed during zero/span calibration. |
| COSLOPE1 | SLOPE1=1.000<br>CO SLOPE1=1.000 [1] | CO slope for range #1 in dual range mode, computed during zero/span calibration. |
| COSLOPE2 | SLOPE2=1.000<br>CO SLOPE2=1.000 [1] | CO slope for range #2 in dual range mode, computed during zero/span calibration. |
| COOFFSET | OFFSET=0.000<br>CO OFFSET=0.000 [1] | CO offset for current range, computed during zero/span calibration. |
| COOFFSET1 | OFFSET1=0.000<br>CO OFFSET1=0.000 [1] | CO offset for range #1 in dual range mode, computed during zero/span calibration. |
| COOFFSET2 | OFFSET2=0.000<br>CO OFFSET2=0.000 [1] | CO offset for range #2 in dual range mode, computed during zero/span calibration. |
| CO2SLOPE [1] | CO2 SLOPE=1.000 | $CO_2$ slope, computed during zero/span calibration. |
| CO2OFFSET [1] | CO2 OFFSET=0.000 | $CO_2$ offset, computed during zero/span calibration. |

| TEST FUNCTION NAME | MESSAGE TEXT | DESCRIPTION |
|---|---|---|
| O2SLOPE [2] | O2 SLOPE=0.980 | $O_2$ slope, computed during zero/span calibration. |
| O2OFFSET [2] | O2 OFFSET=1.79 % | $O_2$ offset, computed during zero/span calibration. |
| CO | CO=17.7 PPM | CO concentration for current range. |
| CO2 [1] | CO2=15.0 % | $CO_2$ concentration. |
| O2 [2] | O2=0.00 WT% | $O_2$ concentration. |
| TESTCHAN | TEST=1751.4 MV | Value output to *TEST_OUTPUT* analog output, selected with *TEST_CHAN_ID* variable. |
| CLOCKTIME | TIME=09:52:20 | Current instrument time of day clock. |

[1] The name is used to request a message via the RS-232 interface, as in “T BOXTEMP”

[2] Engineering software

[3] Current instrument units

[4] T300U, M300EU

[5] T300H, M300EH

[6] Except T360U, M360EU (APR version)

[7] T360, M360E

[8] Sample pressure or differential pressure flow measurement option

[9] GFC7000E

[10] $O_2$ option

[11] T300U2, T320U2, M300EU2, M320EU2

## APPENDIX A-4: Signal I/O Definitions

**Table A-4: Signal I/O Definitions for T300/T300M and M300E/EM Series Analyzers, Revision L.8**

| Signal Name | Bit or Channel Number | Description |
|---|---|---|
| **Internal inputs, U7, J108, pins 9–16 = bits 0–7, default I/O address 322 hex** | | |
| SYNC_OK | 0 | 1 = sync. OK<br>0 = sync. error |
| | 1–7 | Spare |
| **Internal outputs, U8, J108, pins 1–8 = bits 0–7, default I/O address 322 hex** | | |
| ELEC_TEST | 0 | 1 = electrical test on<br>0 = off |
| DARK_CAL | 1 | 1 = dark calibration on<br>0 = off |
| | 2–5 | Spare |
| I2C_RESET | 6 | 1 = reset I2C peripherals<br>0 = normal |
| I2C_DRV_RST | 7 | 0 = hardware reset 8584 chip<br>1 = normal |
| **Control inputs, U11, J1004, pins 1–6 = bits 0–5, default I/O address 321 hex** | | |
| EXT_ZERO_CAL | 0 | 0 = go into zero calibration<br>1 = exit zero calibration |
| EXT_SPAN_CAL | 1 | 0 = go into span calibration<br>1 = exit span calibration |
| REMOTE_RANGE_HI | 2 | 0 = select high range during contact closure calibration<br>1 = select low range |
| | 3–5 | Spare |
| | 6–7 | Always 1 |
| **Control inputs, U14, J1006, pins 1–6 = bits 0–5, default I/O address 325 hex** | | |
| | 0–5 | Spare |
| | 6–7 | Always 1 |
| **Control outputs, U17, J1008, pins 1–8 = bits 0–7, default I/O address 321 hex** | | |
| | 0–7 | Spare |
| **Control outputs, U21, J1008, pins 9–12 = bits 0–3, default I/O address 325 hex** | | |
| | 0–3 | Spare |

| Signal Name | Bit or Channel Number | Description |
|---|---|---|
| **Alarm outputs, U21, J1009, pins 1–12 = bits 4–7, default I/O address 325 hex** | | |
| ST_SYSTEM_OK2 | 4 | 1 = system OK<br>0 = any alarm condition or in diagnostics mode |
| ST_CONC_ALARM_1 [8] | 5 | 1 = conc. limit 1 exceeded<br>0 = conc. OK |
| ST_HIGH_RANGE [10 + 13] | 5 | 1 = high auto-range in use<br>0 = low auto-range |
| ST_CONC_ALARM_2 [8] | 6 | 1 = conc. limit 2 exceeded<br>0 = conc. OK |
| ST_ZERO_CAL [10 + 13] | 6 | 1 = in zero calibration<br>0 = not in zero |
| ST_HIGH_RANGE2 [16] | 7 | 1 = high auto-range in use (mirrors ST_HIGH_RANGE status output)<br>0 = low auto-range |
| **A status outputs, U24, J1017, pins 1–8 = bits 0–7, default I/O address 323 hex** | | |
| ST_SYSTEM_OK | 0 | 0 = system OK<br>1 = any alarm condition |
| ST_CONC_VALID | 1 | 0 = conc. valid<br>1 = hold off or other conditions |
| ST_HIGH_RANGE | 2 | 0 = high auto-range in use<br>1 = low auto-range |
| ST_ZERO_CAL | 3 | 0 = in zero calibration<br>1 = not in zero |
| ST_SPAN_CAL | 4 | 0 = in span calibration<br>1 = not in span |
| ST_DIAG_MODE | 5 | 0 = in diagnostic mode<br>1 = not in diagnostic mode |
| ST_AUTO_REF [3] | 6 | 0 = in auto-reference mode<br>1 = not in auto-reference mode |
| | 7 | Spare |
| **B status outputs, U27, J1018, pins 1–8 = bits 0–7, default I/O address 324 hex** | | |
| ST_AUTO_REF [2] | 0 | 0 = in auto-reference mode<br>1 = not in auto-reference mode |
| | 1–5 | Spare |
| ST_CO2_CAL [7] | 6 | 0 = in $CO_2$ calibration<br>1 = not in $CO_2$ calibration |
| ST_O2_CAL [5] | 7 | 0 = in $O_2$ calibration<br>1 = not in $O_2$ calibration |

| Signal Name | Bit or Channel Number | Description |
|---|---|---|
| **Front panel $I^2C$ keyboard, default $I^2C$ address 4E hex** | | |
| MAINT_MODE | 5 (input) | 0 = maintenance mode<br>1 = normal mode |
| LANG2_SELECT | 6 (input) | 0 = select second language<br>1 = select first language (English) |
| SAMPLE_LED | 8 (output) | 0 = sample LED on<br>1 = off |
| CAL_LED | 9 (output) | 0 = cal. LED on<br>1 = off |
| FAULT_LED | 10 (output) | 0 = fault LED on<br>1 = off |
| AUDIBLE_BEEPER | 14 (output) | 0 = beeper on (for diagnostic testing only)<br>1 = off |
| **Relay board digital output (PCF8574), default $I^2C$ address 44 hex** | | |
| RELAY_WATCHDOG | 0 | Alternate between 0 and 1 at least every 5 seconds to keep relay board active |
| WHEEL_HTR | 1 | 0 = wheel heater on<br>1 = off |
| BENCH_HTR | 2 | 0 = optical bench heater on<br>1 = off |
| O2_CELL_HEATER [5] | 3 | 0 = $O_2$ sensor cell heater on<br>1 = off |
| BOX2_HEATER [3],<br>OVEN_HEATER [15] | 3 | 0 = internal box temperature #2/oven heater on<br>1 = off |
| CAL_VALVE | 4 | 0 = let cal. gas in<br>1 = let sample gas in |
| SPAN_VALVE | 5 | 0 = let span gas in<br>1 = let zero gas in |
| ZERO_SCRUB_VALVE [2,3] | 6 | 0 = open zero scrubber valve<br>1 = close |
| SHUTOFF_VALVE | 6<br>7 [3,15] | 0 = energize shutoff valve<br>1 = de-energize |
| IR_SOURCE_ON | 7<br>n/a [3,15] | 0 = IR source on<br>1 = off |

| Signal Name | Bit or Channel Number | Description |
|---|---|---|
| **Rear board primary MUX analog inputs** | | |
| SAMPLE_PRESSURE | 0 | Sample pressure |
| VACUUM_PRESSURE [6] | 1 | Vacuum pressure |
| PURGE_PRESSURE [9, 10] | 1 | Purge pressure |
| CO_MEASURE | 2 | Detector measure reading |
| CO_REFERENCE | 3 | Detector reference reading |
| | 4 | Temperature MUX |
| SAMPLE_FLOW | 5 | Sample flow |
| PHOTO_TEMP | 6 | Photometer detector temperature |
| TEST_INPUT_7 | 7 | Diagnostic test input |
| TEST_INPUT_8 | 8 | Diagnostic test input |
| REF_4096_MV | 9 | 4.096V reference from MAX6241 |
| O2_SENSOR [5] | 10 | $O_2$ concentration sensor |
| | 11 | Spare |
| CO2_SENSOR [7] | 12 | $CO_2$ concentration sensor |
| | 13 | Spare |
| | 14 | DAC loopback MUX |
| REF_GND | 15 | Ground reference |
| **Rear board temperature MUX analog inputs** | | |
| BOX_TEMP | 0 | Internal box temperature |
| SAMPLE_TEMP | 1 | Sample temperature |
| BENCH_TEMP | 2 | Optical bench temperature |
| WHEEL_TEMP | 3 | Wheel temperature |
| TEMP_INPUT_4 | 4 | Diagnostic temperature input |
| TEMP_INPUT_5 | 5 | Diagnostic temperature input |
| O2_CELL_TEMP [5] | 6 | $O_2$ sensor cell temperature |
| BOX2_TEMP [3]<br>OVEN_TEMP [19,23] | 6 | Internal box temperature #2 / oven temperature |
| | 7 | Spare |
| **Rear board DAC MUX analog inputs** | | |
| DAC_CHAN_1 | 0 | DAC channel 0 loopback |
| DAC_CHAN_2 | 1 | DAC channel 1 loopback |
| DAC_CHAN_3 | 2 | DAC channel 2 loopback |
| DAC_CHAN_4 | 3 | DAC channel 3 loopback |

| Signal Name | Bit or Channel Number | Description |
|---|---|---|
| **Rear board analog outputs** | | |
| CONC_OUT_1,<br>DATA_OUT_1 | 0 | Concentration output #1 (CO, range #1),<br>Data output #1 |
| CONC_OUT_2,<br>DATA_OUT_2 | 1 | Concentration output #2 (CO, range #2),<br>Data output #2 |
| CONC_OUT_3, [7, 5]<br>DATA_OUT_3 | 2 | Concentration output #3 ($CO_2$ or $O_2$),<br>Data output #3 |
| TEST_OUTPUT,<br>DATA_OUT_4 | 3 | Test measurement output,<br>Data output #4 |

[1] Hessen protocol
[2] T300H, M300EH
[3] T300U, M300EU
[4] T320, M320E
[5] $O_2$ option
[6] Sample pressure or differential pressure flow measurement option
[7] $CO_2$ option
[8] Concentration alarms option
[9] T360, M360E
[10] GFC7000E
[11] T300M, M300EM
[13] Air Products special #1
[14] Air Products special #2
[15] T300U2, M300EU2
[16] High auto range relay option

## APPENDIX A-5: DAS Triggers and Parameters

### Table A-5: T300/T300M and M300E/EM DAS Trigger Events, Revision L.8

| Name | Description |
|---|---|
| ATIMER | Automatic timer expired |
| EXITZR | Exit zero calibration mode |
| EXITSP | Exit span calibration mode |
| EXITMP | Exit multi-point calibration mode |
| EXITC2 [5] | Exit $CO_2$ calibration mode |
| SLPCHG | Slope and offset recalculated |
| CO2SLC [5] | $CO_2$ slope and offset recalculated |
| O2SLPC [7] | $O_2$ slope and offset recalculated |
| EXITDG | Exit diagnostic mode |
| SOURCW | Source warning |
| AZEROW [1, 2] | Auto-zero warning |
| CONCW1 [1, 3, 4] | Concentration limit 1 exceeded |
| CONCW2 [1, 3, 4] | Concentration limit 2 exceeded |
| SYNCW | Sync warning |
| BNTMPW | Bench temperature warning |
| WTEMPW | Wheel temperature warning |
| O2TMPW [7] | $O_2$ sensor cell temperature warning |
| STEMPW | Sample temperature warning |
| SFLOWW [6] | Sample flow warning |
| SPRESW | Sample pressure warning |
| PPRESW [4] | Purge pressure warning |
| BTEMPW | Internal box temperature warning |
| BTMP2W [2], OVTMPW [8] | Internal box temperature #2/oven warning |
| PTEMPW | Photometer detector temperature warning |

[1] T300H, M300EH
[2] T300U, M300EU
[3] T320, M320E
[4] GFC7000E
[5] T360, M360E
[6] Except M360EU (APR version)
[7] $O_2$ option
[8] T300U2, T320U2, M300EU2, M320EU2

**Table A-6: T300/T300M and M300E/EM DAS Parameters, Revision L.8**

| Name | Description | Units |
|---|---|---|
| DETMES | Detector measure reading | mV |
| DETREF | Detector reference reading | mV |
| RATIO | M/R ratio. | none |
| SLOPE1 | Slope for range #1 | none |
| SLOPE2 | Slope for range #2 | none |
| OFSET1 | Offset for range #1 | none |
| OFSET2 | Offset for range #2 | none |
| CO2SLP [5] | $CO_2$ slope | none |
| CO2OFS [5] | $CO_2$ offset | % |
| O2SLPE [8] | $O_2$ slope | none |
| O2OFST [8] | $O_2$ offset | % |
| AZERO [1,2] | Auto-zero reading | M/R |
| ZSCNC1 | Concentration for range #1 during zero/span calibration, just before computing new slope and offset | PPM |
| ZSCNC2 | Concentration for range #2 during zero/span calibration, just before computing new slope and offset | PPM |
| CO2ZSC [5] | $CO_2$ concentration during zero/span calibration, just before computing new slope and offset | % |
| O2ZSCN [8] | $O_2$ concentration during zero/span calibration, just before computing new slope and offset | % |
| CONC1 | Concentration for range #1 | PPM |
| CONC2 | Concentration for range #2 | PPM |
| CO2CNC [5] | $CO_2$ concentration | % |
| O2CONC [8] | $O_2$ concentration | % |
| STABIL | Concentration stability | PPM |
| BNTEMP | Bench temperature | °C |
| BNCDTY | Bench temperature control duty cycle | Fraction (0.0 = off, 1.0 = on full) |
| WTEMP | Wheel temperature | °C |
| WHLDTY | Wheel temperature control duty cycle | Fraction (0.0 = off, 1.0 = on full) |
| O2TEMP [8] | $O_2$ sensor cell temperature | °C |
| SMPTMP | Sample temperature | °C |
| SMPFLW [6] | Sample flow | cc/m |
| SMPPRS | Sample pressure | "Hg |
| VACUUM [1, 3, 6] | Vacuum pressure | "Hg |
| PRGPRS [4] | Purge pressure | PSIG |
| BOXTMP | Internal box temperature | °C |
| BX2TMP [2], OVNTMP [9] | Internal box temperature #2/oven | °C |

| Name | Description | Units |
|---|---|---|
| BX2DTY [2], OVNDTY [9] | Internal box temperature #2/oven control duty cycle | Fraction (0.0 = off, 1.0 = on full) |
| PHTDRV | Photometer detector temperature drive | mV |
| TEST7 | Diagnostic test input (TEST_INPUT_7) | mV |
| TEST8 | Diagnostic test input (TEST_INPUT_8) | mV |
| TEMP4 | Diagnostic temperature input (TEMP_INPUT_4) | °C |
| TEMP5 | Diagnostic temperature input (TEMP_INPUT_5) | °C |
| REFGND | Ground reference (REF_GND) | mV |
| RF4096 | 4096 mV reference (REF_4096_MV) | mV |
| XIN1 [4] | Channel 1 Analog In | |
| XIN1SLPE [4] | Channel 1 Analog In Slope | |
| XIN1OFST [4] | Channel 1 Analog In Offset | |
| XIN2 [4] | Channel 2 Analog In | |
| XIN2SLPE [4] | Channel 2 Analog In Slope | |
| XIN2OFST [4] | Channel 2 Analog In Offset | |
| XIN3 [4] | Channel 3 Analog In | |
| XIN3SLPE [4] | Channel 3 Analog In Slope | |
| XIN3OFST [4] | Channel 3 Analog In Offset | |
| XIN4 [4] | Channel 4 Analog In | |
| XIN4SLPE [4] | Channel 4 Analog In Slope | |
| XIN4OFST [4] | Channel 4 Analog In Offset | |
| XIN5 [4] | Channel 5 Analog In | |
| XIN5SLPE [4] | Channel 5 Analog In Slope | |
| XIN5OFST [4] | Channel 5 Analog In Offset | |
| XIN6 [4] | Channel 6 Analog In | |
| XIN6SLPE [4] | Channel 6 Analog In Slope | |
| XIN6OFST [4] | Channel 6 Analog In Offset | |
| XIN7 [4] | Channel 7 Analog In | |
| XIN7SLPE [4] | Channel 7 Analog In Slope | |
| XIN7OFST [4] | Channel 7 Analog In Offset | |
| XIN8 [4] | Channel 8 Analog In | |
| XIN8SLPE [4] | Channel 8 Analog In Slope | |
| XIN8OFST [4] | Channel 8 Analog In Offset | |

[1] T300H, M300EH

[2] T300U, M300EU

[3] T320, M320E

[4] GFC7000E

[5] T360, M360E

[6] Except T360U, M360EU (APR version)

[7] The units, including the concentration units, are always fixed, regardless of the current instrument units

[8] $O_2$ option

[9] T300U2, T320U2, M300EU2, M320EU2

## APPENDIX A-6: Terminal Command Designators

### Table A-7: Terminal Command Designators

| COMMAND | ADDITIONAL COMMAND SYNTAX | DESCRIPTION |
|---|---|---|
| ? [ID] | | Display help screen and commands list |
| LOGON [ID] | password | Establish connection to instrument |
| LOGOFF [ID] | | Terminate connection to instrument |
| T [ID] | SET ALL\|name\|hexmask | Display test(s) |
| | LIST [ALL\|name\|hexmask] [NAMES\|HEX] | Print test(s) to screen |
| | name | Print single test |
| | CLEAR ALL\|name\|hexmask | Disable test(s) |
| W [ID] | SET ALL\|name\|hexmask | Display warning(s) |
| | LIST [ALL\|name\|hexmask] [NAMES\|HEX] | Print warning(s) |
| | name | Clear single warning |
| | CLEAR ALL\|name\|hexmask | Clear warning(s) |
| C [ID] | ZERO\|LOWSPAN\|SPAN [1\|2] | Enter calibration mode |
| | ASEQ number | Execute automatic sequence |
| | COMPUTE ZERO\|SPAN | Compute new slope/offset |
| | EXIT | Exit calibration mode |
| | ABORT | Abort calibration sequence |
| D [ID] | LIST | Print all I/O signals |
| | name[=value] | Examine or set I/O signal |
| | LIST NAMES | Print names of all diagnostic tests |
| | ENTER name | Execute diagnostic test |
| | EXIT | Exit diagnostic test |
| | RESET [DATA] [CONFIG] [exitcode] | Reset instrument |
| | PRINT ["name"] [SCRIPT] | Print DAS configuration |
| | RECORDS ["name"] | Print number of DAS records |
| | REPORT ["name"] [RECORDS=number] [FROM=<start date>][TO=<end date>][VERBOSE\|COMPACT\|HEX] (Print DAS records)(date format: MM/DD/YYYY(or YY) [HH:MM:SS] | Print DAS records |
| | CANCEL | Halt printing DAS records |
| V [ID] | LIST | Print setup variables |
| | name[=value [warn_low [warn_high]]] | Modify variable |
| | name="value" | Modify enumerated variable |
| | CONFIG | Print instrument configuration |
| | MAINT ON\|OFF | Enter/exit maintenance mode |
| | MODE | Print current instrument mode |
| | DASBEGIN [<data channel definitions>] DASEND | Upload DAS configuration |
| | CHANNELBEGIN propertylist CHANNELEND | Upload single DAS channel |
| | CHANNELDELETE ["name"] | Delete DAS channels |

The command syntax follows the command type, separated by a space character. Strings in [brackets] are optional designators. The following key assignments also apply.

**Table A-8: Terminal Key Assignments**

| TERMINAL KEY ASSIGNMENTS | |
|---|---|
| ESC | Abort line |
| CR (ENTER) | Execute command |
| Ctrl-C | Switch to computer mode |
| **COMPUTER MODE KEY ASSIGNMENTS** | |
| LF (line feed) | Execute command |
| Ctrl-T | Switch to terminal mode |

## APPENDIX A-7: MODBUS Register Map

**Table A-9: MODBUS Register Map**

| MODBUS Register Address (dec., 0-based) | Description | Units |
|---|---|---|
| **MODBUS Floating Point Input Registers (32-bit IEEE 754 format; read in high-word, low-word order; read-only)** | | |
| 0 | Detector measure reading | mV |
| 2 | Detector reference reading | mV |
| 4 | M/R ratio. | none |
| 6 | Slope for range #1 | none |
| 8 | Slope for range #2 | none |
| 10 | Offset for range #1 | none |
| 12 | Offset for range #2 | none |
| 14 | Concentration for range #1 during zero/span calibration, just before computing new slope and offset | PPM |
| 16 | Concentration for range #2 during zero/span calibration, just before computing new slope and offset | PPM |
| 18 | Concentration for range #1 | PPM |
| 20 | Concentration for range #2 | PPM |
| 22 | Concentration stability | PPM |
| 24 | Bench temperature | °C |
| 26 | Bench temperature control duty cycle | Fraction (0.0 = off, 1.0 = on full) |
| 28 | Wheel temperature | °C |
| 30 | Wheel temperature control duty cycle | Fraction (0.0 = off, 1.0 = on full) |
| 32 | Sample temperature | °C |
| 34 | Sample pressure | “Hg |
| 36 | Internal box temperature | °C |
| 38 | Photometer detector temperature drive | mV |

| MODBUS Register Address (dec., 0-based) | Description | Units |
|---|---|---|
| 40 | Diagnostic test input (TEST_INPUT_7) | mV |
| 42 | Diagnostic test input (TEST_INPUT_8) | mV |
| 44 | Diagnostic temperature input (TEMP_INPUT_4) | °C |
| 46 | Diagnostic temperature input (TEMP_INPUT_5) | °C |
| 48 | Ground reference (REF_GND) | mV |
| 50 | 4096 mV reference (REF_4096_MV) | mV |
| 52 [1] | Purge pressure | PSIG |
| 54 [1] | Sample flow | cc/m |
| 56 [1] | Vacuum pressure | "Hg |
| 58 [1] | Internal box temperature #2/oven | °C |
| 60 [1] | Internal box temperature #2/oven control duty cycle | Fraction (0.0 = off, 1.0 = on full) |
| 62 [1] | Auto-zero reading | M/R |
| 100 [2] | $O_2$ concentration | % |
| 102 [2] | $O_2$ concentration during zero/span calibration, just before computing new slope and offset | % |
| 104 [2] | $O_2$ slope | — |
| 106 [2] | $O_2$ offset | % |
| 108 [2] | $O_2$ sensor cell temperature | °C |
| 200 [3] | $CO_2$ concentration | % |
| 202 [3] | $CO_2$ concentration during zero/span calibration, just before computing new slope and offset | % |
| 204 [3] | $CO_2$ slope | — |
| 206 [3] | $CO_2$ offset | % |
| **MODBUS Floating Point Holding Registers (32-bit IEEE 754 format; read/write in high-word, low-word order; read/write)** | | |
| 0 | Maps to *CO_SPAN1* variable; target conc. for range #1 | Conc. units |
| 2 | Maps to *CO_SPAN2* variable; target conc. for range #2 | Conc. units |
| 100 [2] | Maps to *O2_TARG_SPAN_CONC* variable | % |
| 200 [3] | Maps to *CO2_TARG_SPAN_CONC* variable | % |

| MODBUS Register Address (dec., 0-based) | Description | Units |
|---|---|---|
| **MODBUS Discrete Input Registers (single-bit; read-only)** | | |
| 0 | Source warning | |
| 1 | Box temperature warning | |
| 2 | Bench temperature warning | |
| 3 | Wheel temperature warning | |
| 4 | Sample temperature warning | |
| 5 | Sample pressure warning | |
| 6 | Photometer detector temperature warning | |
| 7 | System reset warning | |
| 8 | Rear board communication warning | |
| 9 | Relay board communication warning | |
| 10 | Front panel communication warning | |
| 11 | Analog calibration warning | |
| 12 | Dynamic zero warning | |
| 13 | Dynamic span warning | |
| 14 | Invalid concentration | |
| 15 | In zero calibration mode | |
| 16 | In span calibration mode | |
| 17 | In multi-point calibration mode | |
| 18 | System is OK (same meaning as *SYSTEM_OK* I/O signal) | |
| 19 [1] | Purge pressure warning | |
| 20 [1] | Sample flow warning | |
| 21 [1] | Internal box temperature #2/oven warning | |
| 22 [1] | Concentration limit 1 exceeded | |
| 23 [1] | Concentration limit 2 exceeded | |
| 24 [1] | Auto-zero warning | |
| 25 [1] | Sync warning | |
| 26 [1] | In Hessen manual mode | |
| 100 [2] | In $O_2$ calibration mode | |
| 101 [2] | $O_2$ cell temperature warning | |
| 102 [1,2] | $O_2$ concentration limit 1 exceeded | |
| 103 [1,2] | $O_2$ concentration limit 2 exceeded | |
| 200 [3] | In $CO_2$ calibration mode | |
| 201 [1,3] | $CO_2$ concentration limit 1 exceeded | |
| 202 [1,3] | $CO_2$ concentration limit 2 exceeded | |

| MODBUS Register Address (dec., 0-based) | Description | Units |
|---|---|---|
| **MODBUS Coil Registers (single-bit; read/write)** | | |
| 0 | Maps to relay output signal 36 (*MB_RELAY_36* in signal I/O list) | |
| 1 | Maps to relay output signal 37 (*MB_RELAY_37* in signal I/O list) | |
| 2 | Maps to relay output signal 38 (*MB_RELAY_38* in signal I/O list) | |
| 3 | Maps to relay output signal 39 (*MB_RELAY_39* in signal I/O list) | |
| 20 [4] | Triggers zero calibration of range #1 (on enters cal.; off exits cal.) | |
| 21 [4] | Triggers span calibration of range #1 (on enters cal.; off exits cal.) | |
| 22 [4] | Triggers zero calibration of range #2 (on enters cal.; off exits cal.) | |
| 23 [4] | Triggers span calibration of range #2 (on enters cal.; off exits cal.) | |

[1] Optional

[2] $O_2$ option

[3] $CO_2$ option

[4] Set *DYN_ZERO* or *DYN_SPAN* variables to *ON* to enable calculating new slope or offset. Otherwise a calibration check is performed.

# APPENDIX B - Spare Parts

**Note** **Use of replacement parts other than those supplied by T-API may result in non compliance with European standard EN 61010-1.**

**Note** **Due to the dynamic nature of part numbers, please refer to the Website or call Customer Service for more recent updates to part numbers.**

This page intentionally left blank.

# T300 Spare Parts List

PN 06849A DCN5809 08/18/2010



| Part Number | Description |
|---|---|
| 000940600 | ORIFICE, 10 MIL, SPAN GAS FLOW CONTROL |
| 000940700 | ORIFICE, 5 MIL, FLOW CONTROL, 02 OPTION |
| 000941000 | ORIFICE, 13 MIL (SAMPLE FLOW) |
| 001760400 | ASSY, FLOW CTL, 800CC, 1/4" CONN-B |
| 001761300 | ASSY, SPAN GAS FLOW CONTROL |
| 001763000 | ASSY, FLOW CTL, 110CC, 1/8" -B |
| 003291500 | ASSY, THERMISTOR, BENCH/WHEEL |
| 006110200 | ASSY, MOTOR WHEEL HEATER |
| 009450300 | ASSY, ZERO/SPAN VALVES, CO |
| 009550500 | ASSY, SOURCE |
| 009560301 | FILTER WHEEL, CO |
| 009600400 | AKIT, EXPENDABLES, CO |
| 009690000 | AKIT, TFE FLTR ELEM (FL6 100=1) 47mm |
| 009690100 | AKIT, TFE FLTR ELEM (FL6, 30=1) 47mm |
| 009840300 | ASSY, SHUT-OFF VALVE W/FLOW CONTROL |
| 010790000 | INPUT MIRROR, REPLICATED(KB) |
| 010800000 | OUTPUT MIRROR, REPLICATED(KB) |
| 016290000 | WINDOW, SAMPLE FILTER, 47MM (KB) |
| 016300600 | ASSY, SAMPLE FILTER, 47MM, ANG BKT, 5UM |
| 016910000 | AKIT, EXP KIT, CO CATALYST |
| 019340200 | ASSY, SAMPLE THERMISTOR, BRASS |
| 033520000 | MIRROR, OBJECT, 32 PASS, (KB) |
| 033560000 | MIRROR, FIELD, 32 PASS, (KB) |
| 036020100 | ASSY, SENSOR, CO, (KB) |
| 037250000 | ASSY, HEATER, OPTICAL BENCH |
| 037860000 | ORING, TFE RETAINER, SAMPLE FILTER |
| 039260101 | DETECTOR, CO, w/BANDPASS FILTER * |
| 040010000 | ASSY, FAN REAR PANEL |
| 040030100 | PCA, FLOW/PRESSURE |
| 040370000 | ASSY, CO SCRUBBER, (KB) |
| 041350000 | PCA, RELAY BOARD, CO |
| 042410100 | ASSY, PUMP W/FLOW CONTROL |
| 042410200 | ASSY, PUMP, INT, SOX/O3/IR * |
| 042580000 | PCA, KEYBOARD, W/V-DETECT |
| 042680000 | ASSY, VALVE, FOR SAMPLE/CAL VALVE ASSY |
| 042690000 | ASSY, VALVE, SHUT-OFF |
| 043250100 | CONFIGURATION PLUGS, 115V/60Hz |
| 043250300 | CONFIGURATION PLUGS, 220-240V/50Hz |
| 043250400 | CONFIGURATION PLUGS, 220-240V/60Hz |
| 043420000 | ASSY, HEATER/THERMISTOR, O2 OPTION |
| 050320000 | PCA, PHOTO-INTERRUPTER |
| 052830200 | ASSY, MOTOR HUB, MR7 |
| 055010000 | ASSY, MTR WHL HEATER w/THERM, 200W |
| 055100200 | ASSY, OPTION, PUMP, 240V * |

# T300 Spare Parts List

PN 06849A DCN5809 08/18/2010



| Part Number | Description |
|---|---|
| 058021100 | PCA, E-SERIES MOTHERBD, GEN 5-ICOP (ACCEPTS ACROSSER OR ICOP CPU) |
| 062420200 | PCA, SER INTRFACE, ICOP CPU, E- (OPTION) (USE WITH ICOP CPU 062870000) |
| 066970000 | PCA, INTRF. LCD TOUCH SCRN, F/P |
| 067240000 | CPU, PC-104, VSX-6154E, ICOP * |
| 067300000 | PCA, AUX-I/O BD, ETHERNET, ANALOG & USB |
| 067300100 | PCA, AUX-I/O BOARD, ETHERNET |
| 067300200 | PCA, AUX-I/O BOARD, ETHERNET & USB |
| 067900000 | LCD MODULE, W/TOUCHSCREEN |
| 068260100 | DOM, w/SOFTWARE, T300 * |
| 068640000 | MANUAL, T300, OPERATORS |
| 068810000 | PCA, LVDS TRANSMITTER BOARD |
| 069500000 | PCA, SERIAL & VIDEO INTERFACE BOARD |
| 072150000 | ASSY. TOUCHSCREEN CONTROL MODULE |
| CN0000458 | CONNECTOR, REAR PANEL, 12 PIN |
| CN0000520 | CONNECTOR, REAR PANEL, 10 PIN |
| FL0000001 | FILTER, SS |
| FM0000004 | FLOWMETER (KB) |
| HW0000005 | FOOT, CHASSIS |
| HW0000020 | SPRING |
| HW0000036 | TFE TAPE, 1/4" (48 FT/ROLL) |
| HW0000101 | ISOLATOR |
| HW0000453 | SUPPORT, CIRCUIT BD, 3/16" ICOP |
| KIT000032 | REPLACEMENT, CO FILTER WHEEL ASSY |
| KIT000178 | RETROFIT, SYNC DMOD w/DETECTOR |
| KIT000219 | PCA, 4-20MA OUTPUT, E-OPTION |
| OP0000009 | WINDOW, IR SOURCE/BENCH |
| OR0000001 | ORING, FLOW CONTROL |
| OR0000034 | ORING, INPUT & OUTPUT MIRRORS |
| OR0000039 | ORING, IR SOURCE/BENCH |
| OR0000041 | ORING, OBJECT & FIELD MIRRORS |
| OR0000088 | ORING, DETECTOR |
| OR0000094 | ORING, SAMPLE FILTER |
| PS0000011 | PWR SUPPLY, SW, +5V, +/-15V, 40W (KB) |
| PS0000024 | COVER ENCLOSURE KIT,LPX 40/60 (KB) |
| PS0000025 | PWR SUPPLY, SW, 12V, 40W (KB) |
| PU0000022 | REBUILD KIT, FOR PU20 & 04241 (KB) |
| RL0000015 | RELAY, DPDT, (KB) |
| SW0000051 | SWITCH, POWER CIRC BREAK VDE/CE, w/RG(KB |
| SW0000059 | PRESSURE SENSOR, 0-15 PSIA, ALL SEN |
| WR0000008 | POWER CORD, 10A(KB) |

# T300 Recommended Spare Parts Stocking Levels

(Reference 06563A DCN6306)

**Recommended Spare Parts Stocking Level: Standard**

| Part Number | Description | Units | | | | |
|---|---|---|---|---|---|---|
| | | 1 | 2-5 | 6-10 | 11-20 | 21-30 |
| 003290500 | Wheel Thermistor Assembly (885-071600) | 1 | 1 | 1 | 2 | 2 |
| 006110200 | Assembly, Motor Wheel Heater, 50W 120V | | | 1 | 2 | 2 |
| 009550400 | Source Assembly (with Adapter) < SN 65 | 1 | 1 | 2 | 2 | 3 |
| 009550500 | Source Assembly > SN 65 | 1 | 1 | 2 | 2 | 3 |
| 009560301 | Gas Filter Wheel | | | | 1 | 1 |
| 037250100 | Bench Band Heater | | 1 | 1 | 2 | 2 |
| 040010000 | Assembly, Fan | 1 | 1 | 2 | 2 | 3 |
| 040030100 | PCA, PRESS SENSORS (1X), w/FM4, E SERIES | | | 1 | 2 | 3 |
| 042410200 * | Pump, 115V 50/60 Hz | | | | 2 | 2 |
| 050320000 | PCA, Wheel Position Sensor | | 1 | 1 | 2 | 2 |
| 052830100 | ASSY, MOTOR HUB, MR7, "A", 115V | | | 1 | 1 | 2 |
| 055010000 | ASSY, MTR WHL HEATER w/THERM, 200W | | | 1 | 2 | 2 |
| 058021100 | PCA, E-SERIES MOTHERBOARD, GEN 5-I | | | | 1 | 2 |
| 067240000 | CPU, PC-104, VSX-6154E, ICOP *(KB) | | | 1 | 1 | 1 |
| KIT000159 | REPLACEMENT, RELAY BD, M300E | | 1 | 1 | 2 | 2 |
| KIT000178 | RETROFIT, SYNC DMOD w/DETECTOR, M300E | | | 1 | 2 | 2 |
| KIT000253 | KIT, SPARE PS37 | | 1 | 1 | 1 | 2 |
| KIT000254 | KIT, SPARE PS38 | | 1 | 1 | 1 | 2 |
| RL0000015 | Relay | 1 | 1 | 2 | 2 | 2 |
| 067900000 | LCD MODULE, W/TOUCHSCREEN(KB) | | | | 1 | 2 |
| 066970000 | PCA, INTRF. LCD TOUCH SCRN, F/P | | | | 1 | 2 |
| 068810000 | PCA, LVDS TRANSMITTER BOARD | | | | 1 | 2 |
| 072150000 | TOUCHSCREEN CONTROL MODULE | | | 1 | 2 | 3 |

*** Recommended Spare Parts Stocking Level: For Pump Assembly, 240V Option Installed**

| Part Number | Description | Units | | | | |
|---|---|---|---|---|---|---|
| | | 1 | 2-5 | 6-10 | 11-20 | 21-30 |
| 055100200 | OPTION, PUMP ASSY, 240V | | | 1 | 2 | 2 |

**Recommended Spare Parts Stocking Level: For $O_2$ Option Installed**

| Part Number | Description | Units | | | | |
|---|---|---|---|---|---|---|
| | | 1 | 2-5 | 6-10 | 11-20 | 21-30 |
| OP0000030 | OXYGEN TRANSDUCER, PARAMAGNETIC | | | | 1 | 1 |

**Recommended Spare Parts Stocking Level: For IZS Option Installed**

| Part Number | Description | Units | | | | |
|---|---|---|---|---|---|---|
| | | 1 | 2-5 | 6-10 | 11-20 | 21-30 |
| 042690000 | Valve Assy, 2-Way, On/Off | | | 1 | 1 | 2 |
| 042680000 | Valve Assy, 3-Way | | | 1 | 1 | 2 |

# T300M Spare Parts List

(Reference: 074660000, 01/17/2012/ 13:05)

| PARTNUMBER | DESCRIPTION |
|---|---|
| 037250100 | ASSY, STRIP HEATER W/TC |
| 037860000 | ORING, TEFLON, RETAINING RING, 47MM (KB) |
| 039260101 | DETECTOR, CO, w/BANDPASS FILTER * |
| 040010000 | ASSY, FAN REAR PANEL (B/F) |
| 040030100 | PCA, PRESS SENSORS (1X), w/FM4 |
| 040360100 | AKIT, SPARE PARTS, M300E/M |
| 040370000 | ASSY, CO SCRUBBER |
| 041350000 | PCA, RELAY BOARD, CO(KB) |
| 042410100 | ASSY, PUMP, INT, (CO) W/ 800CC FLOW |
| 042410200 | ASSY, PUMP, INT, SOX/O3/IR * |
| 042680000 | ASSY, VALVE (SS) |
| 042690000 | ASSY, VALVE , 2-WAY, 12V |
| 042990100 | ASSY, SENSOR, M300EM |
| 043250100 | ASSY, PWR CONF, 100-120V/60HZ, IR |
| 043250300 | OPTION, PWR CONF, 220-240V/50HZ, IR |
| 043250400 | OPTION, PWR CONF, 220-240V/60HZ, IR |
| 050320000 | PCA, OPTO-INTERRUPTER |
| 052830200 | ASSY, MOTOR HUB, MR7 |
| 055010000 | ASSY, MTR WHL HEATER w/THERM, 200W |
| 055100200 | ASSY, OPTION, PUMP, 240V * |
| 058021100 | PCA, MOTHERBD, GEN 5-ICOP |
| 066970000 | PCA, INTRF. LCD TOUCH SCRN, F/P |
| 067240000 | CPU, PC-104, VSX-6154E, ICOP *(KB) |
| 067300000 | PCA, AUX-I/O BD, ETHERNET, ANALOG & USB |
| 067300100 | PCA, AUX-I/O BOARD, ETHERNET |
| 067300200 | PCA, AUX-I/O BOARD, ETHERNET & USB |
| 067900000 | LCD MODULE, W/TOUCHSCREEN(KB) |
| 068640000 | MANUAL, T300/T300M, OPERATORS |
| 068810000 | PCA, LVDS TRANSMITTER BOARD |
| 069500000 | PCA, SERIAL & VIDEO INTERFACE BOARD |
| 072150000 | ASSY. TOUCHSCREEN CONTROL MODULE |
| 074650100 | DOM, w/SOFTWARE, STD, T300M |
| CN0000073 | POWER ENTRY, 120/60 (KB) |
| 036100000 | OPTION, IZS, CO (KB) |
| 036090000 | OPTION, Z/S, CO (KB) |
| 036080000 | OPTION, Z/S & SO VALVE, CO (KB) |
| 036070000 | OPTION, IZS & SO VALVE, CO (KB) |
| 026070000 | MIRROR, FIELD, 8 PASS |
| 026060000 | MIRROR, OBJECTIVE, 8 PASS |
| 019340200 | ASSY, SAMPLE THERMISTOR, BRASS |
| 016300600 | ASSY, SAMPLE FILTER, 47MM, ANG BKT, 5UM |
| 016290000 | WINDOW, SAMPLE FILTER, 47MM (KB) |
| 010800000 | OUTPUT MIRROR, REPLICATED(KB) |
| 010790000 | INPUT MIRROR, REPLICATED(KB) |
| 009840300 | ASSY, SHUT-OFF VALVE, (KB) |
| 009690100 | AKIT, TFE FLTR ELEM (FL6, 30=1) 47mm |
| 009690000 | AKIT, TFE FLTR ELEM (FL6 100=1) 47mm |
| 009600400 | AKIT, EXPENDABLES, CO |
| 009560301 | GF WHEEL, CO, (KB) * |

# T300M Spare Parts List

(Reference: 074660000, 01/17/2012/ 13:05)

| PARTNUMBER | DESCRIPTION |
|---|---|
| 009550500 | ASSY, SOURCE |
| 009450300 | ASSY, ZERO/SPAN VALVES, CO |
| 009390000 | APERTURE (KB) |
| 003291500 | ASSY, THERMISTOR, BENCH/WHEEL |
| 001761300 | ASSY, FLOW CTRL, .010, 1/8", SS |
| 001760400 | ASSY, FLOW CTL, 800CC, 1/4" CONN-B |
| 000941000 | CD, ORIFICE, .013 BLUE/GREEN |
| 000940600 | CD, ORIFICE, .010 BROWN |
| CN0000458 | PLUG, 12, MC 1.5/12-ST-3.81 (KB) |
| CN0000520 | PLUG, 10, MC 1.5/10-ST-3.81 (KB) |
| FL0000001 | FILTER, SS (KB) |
| FM0000004 | FLOWMETER (KB) |
| HW0000005 | FOOT |
| HW0000020 | SPRING |
| HW0000036 | TFE TAPE, 1/4" (48 FT/ROLL) |
| HW0000101 | ISOLATOR |
| HW0000453 | SUPPORT, CIRCUIT BD, 3/16" ICOP |
| HW0000685 | LATCH, MAGNETIC, FRONT PANEL |
| KIT000178 | RETROFIT, SYNC DMOD w/DETECTOR* |
| KIT000219 | AKIT, 4-20MA CURRENT OUTPUT |
| OP0000009 | WINDOW (KB) |
| OR0000001 | ORING, 2-006VT *(KB) |
| OR0000034 | ORING, 2-011V FT10 |
| OR0000039 | ORING, 2-012V |
| OR0000041 | ORING, 2-136V |
| OR0000088 | ORING, 2-011S, 40 DURO |
| OR0000094 | ORING, 2-228V, 50 DURO VITON(KB) |
| PS0000011 | PWR SUPPLY, SW, +5V, +/-15V, 40W (KB) |
| PS0000024 | COVER ENCLOSURE KIT,LPX 40/60 (KB) |
| PS0000025 | PWR SUPPLY, SW, 12V, 40W (KB) |
| PU0000022 | REBUILD KIT, FOR PU20 & 04241 (KB) |
| RL0000015 | RELAY, DPDT, (KB) |
| SW0000025 | SWITCH, POWER, CIRC BREAK, VDE/CE *(KB) |
| SW0000059 | PRESSURE SENSOR, 0-15 PSIA, ALL SEN |
| WR0000008 | POWER CORD, 10A(KB) |

# T300M Recommended Spare Parts Stocking Levels

(Reference 2011-12-01)

**Recommended Spare Parts Stocking Level: Standard**

| Part Number | Description | Units | | | | |
|---|---|---|---|---|---|---|
| | | 1 | 2-5 | 6-10 | 11-20 | 21-30 |
| 003290500 | Wheel Thermistor Bench/Wheel | 1 | 1 | 1 | 2 | 2 |
| 009550500 | Source Assembly | 1 | 1 | 2 | 2 | 3 |
| 009560301 | Gas Filter Wheel | | | | 1 | 1 |
| 037250100 | Bench Band Heater | | 1 | 1 | 2 | 2 |
| 040010000 | Assembly, Fan | 1 | 1 | 2 | 2 | 3 |
| 040030100 | PCA, PRESS SENSORS (1X), w/FM4, E SERIES | | | 1 | 2 | 3 |
| 042410200 * | Pump, 115V 50/60 Hz | | | | 2 | 2 |
| 050320000 | PCA, Opto-Interrupter | | 1 | 1 | 2 | 2 |
| 052830100 | ASSY, MOTOR HUB, MR7, "A", 115V | | | 1 | 1 | 2 |
| 055010000 | ASSY, MTR WHL HEATER w/THERM, 200W | | | 1 | 2 | 2 |
| 058021100 | PCA, E-SERIES MOTHERBOARD, GEN 5-I | | | | 1 | 2 |
| 067240000 | CPU, PC-104, VSX-6154E, ICOP *(KB) | | | 1 | 1 | 1 |
| KIT000159 | REPLACEMENT, RELAY BD, M300E | | 1 | 1 | 2 | 2 |
| KIT000179 | RETROFIT, SYNC DMOD UPDATE, M300EM | | | 1 | 2 | 2 |
| KIT000253 | KIT, SPARE PS37 | | 1 | 1 | 1 | 2 |
| KIT000254 | KIT, SPARE PS38 | | 1 | 1 | 1 | 2 |
| RL0000015 | Relay | 1 | 1 | 2 | 2 | 2 |
| 067900000 | LCD MODULE, W/TOUCHSCREEN(KB) | | | | 1 | 2 |
| 066970000 | PCA, INTRF. LCD TOUCH SCRN, F/P | | | | 1 | 2 |
| 068810000 | PCA, LVDS TRANSMITTER BOARD | | | | 1 | 2 |
| 072150000 | TOUCHSCREEN CONTROL MODULE | | | 1 | 2 | 3 |

*** For 240V Operation, use 055100200**

| Part Number | Description | Units | | | | |
|---|---|---|---|---|---|---|
| | | 1 | 2-5 | 6-10 | 11-20 | 21-30 |
| 055100200 | OPTION, PUMP ASSY, 240V | | | 1 | 2 | 2 |

**Recommended Spare Parts Stocking Level: For $O_2$ Option Installed**

| Part Number | Description | Units | | | | |
|---|---|---|---|---|---|---|
| | | 1 | 2-5 | 6-10 | 11-20 | 21-30 |
| OP0000030 | OXYGEN TRANSDUCER, PARAMAGNETIC | | | | 1 | 1 |

**Recommended Spare Parts Stocking Level: For IZS/ZS Option Installed**

| Part Number | Description | Units | | | | |
|---|---|---|---|---|---|---|
| | | 1 | 2-5 | 6-10 | 11-20 | 21-30 |
| 042690000 | Valve Assy, 2-Way, On/Off | | | 1 | 1 | 2 |
| 042680000 | Valve Assy, 3-Way | | | 1 | 1 | 2 |

**APPENDIX C**
**Warranty/Repair Questionnaire**
**T300/T300M and M300E/EM**
(04305G DCN5798)

TELEDYNE
ADVANCED POLLUTION INSTRUMENTATION
A Teledyne Technologies Company

CUSTOMER: _____ PHONE: _____

CONTACT NAME: _____ FAX NO: _____

SITE ADDRESS: _____

SERIAL NO.: _____ FIRMWARE REVISION: _____

1. Are there any failure messages? _____

_____

_____

_____

_____

Please complete the following table:

| PARAMETER | DISPLAYED AS | OBSERVED VALUE | UNITS | NOMINAL RANGE |
|---|---|---|---|---|
| **Range** | Range | | PPM, MGM[1,2]<br>PPB, UGM[1] | 1 – 1000 PPM[1]<br>5 – 5000 PPM[2] |
| **Stability** | STABIL | | PPM | <1.0 PPM<br>with Zero Air |
| **CO Measure** | CO MEAS | | mV | 2500 – 4800 MV |
| **CO Reference** | CO REF | | mV | 2500 – 4800MV |
| **Measure/Reference Ratio** | MR RATIO | | – | 1.1 – 1.3 W/ Zero Air |
| **Pressure** | PRES | | In-Hg-A | -2”Ambient Absolute |
| **Sample Flow** | SAMP FL | | $cm^3$/min | 800 ± 10% |
| **Sample Temp** | SAMPLE TEMP | | °C | 48 ± 4 |
| **Bench Temp** | BENCH TEMP | | °C | 48 ± 2 |
| **Wheel Temp** | WHEEL TEMP | | °C | 68 ± 2 |
| **Box Temp** | BOX TEMP | | °C | Ambient + 7 ± 10 |
| **Photo Drive** | PHT DRIVE | | mV | 250 mV – 4750 mV |
| **Slope of CO Measurement** | CO SLOPE | | – | 1.0 ± .3 |
| **Offset of CO Measurement** | CO OFFSET | | PPM | 0 ± 0.3 |
| **Dark Cal Reference signal** | REF DARK OFFSET | | mV | 125 ± 50 mV |
| **Dark Cal Measurement Signal** | MEAS DARK OFFSET | | mV | 125 ± 50 mV |
| **Electric Test** | | | PPM | 40 ± 2 PPM |

[1] T300, M300E [2] T300M, M300EM

TELEDYNE API CUSTOMER SERVICE
Email: api-customerservice@teledyne.com
PHONE: (858) 657-9800 TOLL FREE: (800) 324-5190 FAX: (858) 657-9816

2. Have you performed a leak check and flow check? _____

3. What are the failure symptoms? _____

_____

_____

_____

4. What test have you done trying to solve the problem? _____

_____

_____

_____

_____

5. Please check these signals and verify the correctness. Look for the signals annotated on the diagram. What are the peak-to-peak voltages?

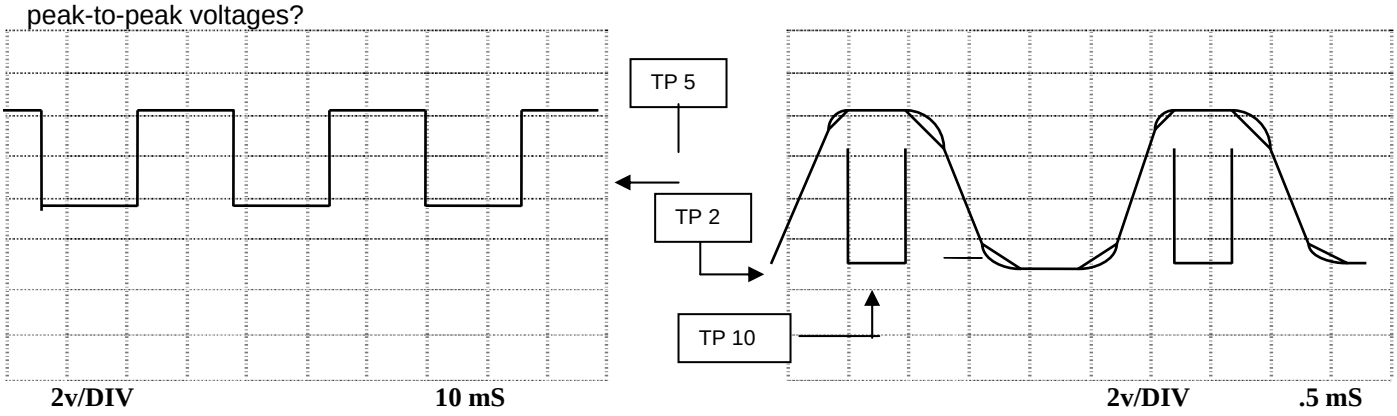


5. If possible, please include a portion of a strip chart pertaining to the problem. Circle pertinent data.

Thank you for providing this information. Your assistance enables Teledyne API to respond faster to the problem that you are encountering.

**OTHER INFORMATION**: _____

_____

_____

_____

_____

_____

_____

_____

_____

TELEDYNE API CUSTOMER SERVICE
Email: api-customerservice@teledyne.com
PHONE: (858) 657-9800 TOLL FREE: (800) 324-5190 FAX: (858) 657-9816

# APPENDIX D – Wire List and Electronic Schematics

This page intentionally left blank.

## Interconnect List, T300/M T360/M

(Reference: 0691201B, DCN5947)

| Revision | Description | | | | | | Date | DCN |
|---|---|---|---|---|---|---|---|---|
| A | Initial Release | | | | | | 9/3/10 | 5833 |
| B | Added T360 & T360M | | | | | | 12/30/10 | 5947 |
| | | | | | | | | |
| | | | | | | | | |

| | | FROM | | | | TO | | | |
|---|---|---|---|---|---|---|---|---|---|
| **Cable PN** | **Signal** | **Assembly** | **PN** | **J/P** | **Pin** | **Assembly** | **PN** | **J/P** | **Pin** |
| **03995** | **CBL, MOTOR TO RELAY PCA** | | | | | | | | |
| | GFC Drive - A | Relay PCA | 041350000 | J6 | 1 | GFC Motor | 052380200 | P1 | 1 |
| | GFC Drive - B | Relay PCA | 041350000 | J6 | 2 | GFC Motor | 052380200 | P1 | 2 |
| | Motor Return | Relay PCA | 041350000 | J6 | 3 | GFC Motor | 052380200 | P1 | 3 |
| | Chassis Gnd | Relay PCA | 041350000 | J6 | 4 | GFC Motor | 052380200 | P1 | 4 |
| **04103** | **CBL, MOTHERBOARD TO THERMISTORS** | | | | | | | | |
| | +5V Ref | Motherboard | 058021100 | J27 | 6 | Bench Temp Snsr | 003291500 | P1 | 1 |
| | Bench Temp | Motherboard | 058021100 | J27 | 13 | Bench Temp Snsr | 003291500 | P1 | 2 |
| | +5V Ref | Motherboard | 058021100 | J27 | 5 | Wheel Temp Snsr | 003291500 | P1 | 1 |
| | Wheel Temp | Motherboard | 058021100 | J27 | 12 | Wheel Temp Snsr | 003291500 | P1 | 2 |
| | +5V ref | Motherboard | 058021100 | J27 | 1 | Shield | | | |
| | +5V Ref | Motherboard | 058021100 | J27 | 7 | Sample Temp Snsr | 019340200, -06 | P1 | 1 |
| | Sample Temp | Motherboard | 058021100 | J27 | 14 | Sample Temp Snsr | 019340200, -06 | P1 | 2 |
| | | Motherboard | 058021100 | J27 | 2 | O2 Sensor Therm/Htr | 043420000 | P1 | 3 |
| | | Motherboard | 058021100 | J27 | 9 | O2 Sensor Therm/Htr | 043420000 | P1 | 1 |
| | | Relay PCA | 041350000 | J4 | 1 | O2 Sensor Therm/Htr | 043420000 | P1 | 4 |
| | | Relay PCA | 041350000 | J4 | 2 | O2 Sensor Therm/Htr | 043420000 | P1 | 2 |
| | | Relay PCA | 041350000 | J4 | 3 | Shield | | | |
| **04105** | **CBL, LCD INTERFACE PCA TO MOTHERBOARD** | | | | | | | | |
| | Kbd Interupt | LCD Interface PCA | 066970000 | J1 | 7 | Motherboard | 058021100 | J106 | 1 |
| | DGND | LCD Interface PCA | 066970000 | J1 | 2 | Motherboard | 058021100 | J106 | 8 |
| | SDA | LCD Interface PCA | 066970000 | J1 | 5 | Motherboard | 058021100 | J106 | 2 |
| | SCL | LCD Interface PCA | 066970000 | J1 | 6 | Motherboard | 058021100 | J106 | 6 |
| | Shld | LCD Interface PCA | 066970000 | J1 | 10 | Motherboard | 058021100 | J106 | 5 |
| **04146** | **CBL, SYNC DEMOD** | | | | | | | | |
| | DGND | Opto Pickup | 05032 or 05256 | J2 | 1 | Sync Demod | 032960000 | JP4 | 6 |
| | Segmentg Gate | Opto Pickup | 05032 or 05256 | J2 | 2 | Sync Demod | 032960000 | JP4 | 5 |
| | No Connection | Opto Pickup | 05032 or 05256 | J2 | 3 | Sync Demod | 032960000 | JP4 | 4 |
| | DGND | Opto Pickup | 05032 or 05256 | J2 | 4 | Sync Demod | 032960000 | JP4 | 3 |
| | M/R Gate | Opto Pickup | 05032 or 05256 | J2 | 5 | Sync Demod | 032960000 | JP4 | 2 |
| | +5V | Opto Pickup | 05032 or 05256 | J2 | 6 | Sync Demod | 032960000 | JP4 | 1 |
| **04237** | **CBL ASSY, 12V VALVE CBLS** | | | | | | | | |
| | +12 | Relay PCA | 041350000 | J7 | 6 | Zero/Span Vlv | 042680000 | P1 | 1 |
| | Zero/Span Drv | Relay PCA | 041350000 | J7 | 8 | Zero/Span Vlv | 042680000 | P1 | 2 |
| | +12 | Relay PCA | 041350000 | J7 | 2 | Samp/Cal Vlv | 042680000 | P1 | 1 |
| | Samp/Cal Drv | Relay PCA | 041350000 | J7 | 4 | Samp/Cal Vlv | 042680000 | P1 | 2 |
| | +12 | Relay PCA | 041350000 | J7 | 5 | Shutoff Valve | 042690000 | P1 | 1 |
| | Shutoff Vlv | Relay PCA | 041350000 | J7 | 7 | Shutoff Valve | 042690000 | P1 | 2 |
| **04671** | **CBL, MOTHERBOARD TO XMITTER BD (MULTIDROP OPTION)** | | | | | | | | |
| | GND | Motherboard | 058021100 | P12 | 2 | Xmitter bd w/Multidrop | 069500000 | J4 | 2 |
| | RX0 | Motherboard | 058021100 | P12 | 14 | Xmitter bd w/Multidrop | 069500000 | J4 | 14 |
| | RTS0 | Motherboard | 058021100 | P12 | 13 | Xmitter bd w/Multidrop | 069500000 | J4 | 13 |
| | TX0 | Motherboard | 058021100 | P12 | 12 | Xmitter bd w/Multidrop | 069500000 | J4 | 12 |
| | CTS0 | Motherboard | 058021100 | P12 | 11 | Xmitter bd w/Multidrop | 069500000 | J4 | 11 |
| | RS-GND0 | Motherboard | 058021100 | P12 | 10 | Xmitter bd w/Multidrop | 069500000 | J4 | 10 |
| | RTS1 | Motherboard | 058021100 | P12 | 8 | Xmitter bd w/Multidrop | 069500000 | J4 | 8 |
| | CTS1/485- | Motherboard | 058021100 | P12 | 6 | Xmitter bd w/Multidrop | 069500000 | J4 | 6 |
| | RX1 | Motherboard | 058021100 | P12 | 9 | Xmitter bd w/Multidrop | 069500000 | J4 | 9 |
| | TX1/485+ | Motherboard | 058021100 | P12 | 7 | Xmitter bd w/Multidrop | 069500000 | J4 | 7 |
| | RS-GND1 | Motherboard | 058021100 | P12 | 5 | Xmitter bd w/Multidrop | 069500000 | J4 | 5 |
| | RX1 | Motherboard | 058021100 | P12 | 9 | Xmitter bd w/Multidrop | 069500000 | J4 | 9 |
| | TX1/485+ | Motherboard | 058021100 | P12 | 7 | Xmitter bd w/Multidrop | 069500000 | J4 | 7 |
| | RS-GND1 | Motherboard | 058021100 | P12 | 5 | Xmitter bd w/Multidrop | 069500000 | J4 | 5 |
| **06737** | **CBL, I2C TO AUX I/O PCA (ANALOG IN OPTION)** | | | | | | | | |
| | ATX- | Motherboard | 058021100 | J106 | 1 | AUX I/O PCA | 067300000 | J2 | 1 |
| | ATX+ | Motherboard | 058021100 | J106 | 2 | AUX I/O PCA | 067300000 | J2 | 2 |
| | LED0 | Motherboard | 058021100 | J106 | 3 | AUX I/O PCA | 067300000 | J2 | 3 |
| | ARX+ | Motherboard | 058021100 | J106 | 4 | AUX I/O PCA | 067300000 | J2 | 4 |
| | ARX- | Motherboard | 058021100 | J106 | 5 | AUX I/O PCA | 067300000 | J2 | 5 |
| | LED0+ | Motherboard | 058021100 | J106 | 6 | AUX I/O PCA | 067300000 | J2 | 6 |
| | LED1+ | Motherboard | 058021100 | J106 | 8 | AUX I/O PCA | 067300000 | J2 | 8 |
| **06738** | **CBL, CPU COM to AUX I/O (USB OPTION)** | | | | | | | | |
| | RXD1 | CPU PCA | 067240000 | COM1 | 1 | AUX I/O PCA | 0673000 or -02 | J3 | 1 |
| | DCD1 | CPU PCA | 067240000 | COM1 | 2 | AUX I/O PCA | 0673000 or -02 | J3 | 2 |
| | DTR1 | CPU PCA | 067240000 | COM1 | 3 | AUX I/O PCA | 0673000 or -02 | J3 | 3 |
| | TXD1 | CPU PCA | 067240000 | COM1 | 4 | AUX I/O PCA | 0673000 or -02 | J3 | 4 |
| | DSR1 | CPU PCA | 067240000 | COM1 | 5 | AUX I/O PCA | 0673000 or -02 | J3 | 5 |
| | GND | CPU PCA | 067240000 | COM1 | 6 | AUX I/O PCA | 0673000 or -02 | J3 | 6 |
| | CTS1 | CPU PCA | 067240000 | COM1 | 7 | AUX I/O PCA | 0673000 or -02 | J3 | 7 |
| | RTS1 | CPU PCA | 067240000 | COM1 | 8 | AUX I/O PCA | 0673000 or -02 | J3 | 8 |
| | RI1 | CPU PCA | 067240000 | COM1 | 10 | AUX I/O PCA | 0673000 or -02 | J3 | 10 |

## Interconnect List, T300/M T360/M

(Reference: 0691201B, DCN5947)

| | | FROM | | | | TO | | | |
|---|---|---|---|---|---|---|---|---|---|
| **Cable PN** | **Signal** | **Assembly** | **PN** | **J/P** | **Pin** | **Assembly** | **PN** | **J/P** | **Pin** |
| **06738** | **CBL, CPU COM to AUX I/O (MULTIDROP OPTION)** | | | | | | | | |
| | RXD | CPU PCA | 067240000 | COM1 | 1 | Xmitter bd w/Multidrop | 069500000 | J3 | 1 |
| | DCD | CPU PCA | 067240000 | COM1 | 2 | Xmitter bd w/Multidrop | 069500000 | J3 | 2 |
| | DTR | CPU PCA | 067240000 | COM1 | 3 | Xmitter bd w/Multidrop | 069500000 | J3 | 3 |
| | TXD | CPU PCA | 067240000 | COM1 | 4 | Xmitter bd w/Multidrop | 069500000 | J3 | 4 |
| | DSR | CPU PCA | 067240000 | COM1 | 5 | Xmitter bd w/Multidrop | 069500000 | J3 | 5 |
| | GND | CPU PCA | 067240000 | COM1 | 6 | Xmitter bd w/Multidrop | 069500000 | J3 | 6 |
| | CTS | CPU PCA | 067240000 | COM1 | 7 | Xmitter bd w/Multidrop | 069500000 | J3 | 7 |
| | RTS | CPU PCA | 067240000 | COM1 | 8 | Xmitter bd w/Multidrop | 069500000 | J3 | 8 |
| | RI | CPU PCA | 067240000 | COM1 | 10 | Xmitter bd w/Multidrop | 069500000 | J3 | 10 |
| **06739** | **CBL, CPU ETHERNET TO AUX I/O PCA** | | | | | | | | |
| | ATX- | CPU PCA | 067240000 | LAN | 1 | AUX I/O PCA | 067300100 | J2 | 1 |
| | ATX+ | CPU PCA | 067240000 | LAN | 2 | AUX I/O PCA | 067300100 | J2 | 2 |
| | LED0 | CPU PCA | 067240000 | LAN | 3 | AUX I/O PCA | 067300100 | J2 | 3 |
| | ARX+ | CPU PCA | 067240000 | LAN | 4 | AUX I/O PCA | 067300100 | J2 | 4 |
| | ARX- | CPU PCA | 067240000 | LAN | 5 | AUX I/O PCA | 067300100 | J2 | 5 |
| | LED0+ | CPU PCA | 067240000 | LAN | 6 | AUX I/O PCA | 067300100 | J2 | 6 |
| | LED1 | CPU PCA | 067240000 | LAN | 7 | AUX I/O PCA | 067300100 | J2 | 7 |
| | LED1+ | CPU PCA | 067240000 | LAN | 8 | AUX I/O PCA | 067300100 | J2 | 8 |
| **06741** | **CBL, CPU USB TO LCD INTERFACE PCA** | | | | | | | | |
| | GND | CPU PCA | 067240000 | USB | 8 | LCD Interface PCA | 066970000 | JP9 | |
| | LUSBD3+ | CPU PCA | 067240000 | USB | 6 | LCD Interface PCA | 066970000 | JP9 | |
| | LUSBD3- | CPU PCA | 067240000 | USB | 4 | LCD Interface PCA | 066970000 | JP9 | |
| | VCC | CPU PCA | 067240000 | USB | 2 | LCD Interface PCA | 066970000 | JP9 | |
| **06746** | **CBL, MB TO 06154 CPU** | | | | | | | | |
| | GND | Motherboard | 058021100 | P12 | 2 | Shield | | | |
| | RX0 | Motherboard | 058021100 | P12 | 14 | CPU PCA | 067240000 | COM1 | 1 |
| | RTS0 | Motherboard | 058021100 | P12 | 13 | CPU PCA | 067240000 | COM1 | 8 |
| | TX0 | Motherboard | 058021100 | P12 | 12 | CPU PCA | 067240000 | COM1 | 4 |
| | CTS0 | Motherboard | 058021100 | P12 | 11 | CPU PCA | 067240000 | COM1 | 7 |
| | RS-GND0 | Motherboard | 058021100 | P12 | 10 | CPU PCA | 067240000 | COM1 | 6 |
| | RTS1 | Motherboard | 058021100 | P12 | 8 | CPU PCA | 067240000 | COM2 | 8 |
| | CTS1/485- | Motherboard | 058021100 | P12 | 6 | CPU PCA | 067240000 | COM2 | 7 |
| | RX1 | Motherboard | 058021100 | P12 | 9 | CPU PCA | 067240000 | COM2 | 1 |
| | TX1/485+ | Motherboard | 058021100 | P12 | 7 | CPU PCA | 067240000 | COM2 | 4 |
| | RS-GND1 | Motherboard | 058021100 | P12 | 5 | CPU PCA | 067240000 | COM2 | 6 |
| | RX1 | Motherboard | 058021100 | P12 | 9 | CPU PCA | 067240000 | 485 | 1 |
| | TX1/485+ | Motherboard | 058021100 | P12 | 7 | CPU PCA | 067240000 | 485 | 2 |
| | RS-GND1 | Motherboard | 058021100 | P12 | 5 | CPU PCA | 067240000 | 485 | 3 |
| **06809** | **CBL ASSY, DC POWER TO MOTHERBOARD** | | | | | | | | |
| | DGND | Relay PCA | 041350000 | J14 | 1 | Motherboard | 058021100 | J15 | 1 |
| | +5V | Relay PCA | 041350000 | J14 | 2 | Motherboard | 058021100 | J15 | 2 |
| | AGND | Relay PCA | 041350000 | J14 | 3 | Motherboard | 058021100 | J15 | 3 |
| | +15V | Relay PCA | 041350000 | J14 | 4 | Motherboard | 058021100 | J15 | 4 |
| | AGND | Relay PCA | 041350000 | J14 | 5 | Motherboard | 058021100 | J15 | 5 |
| | -15V | Relay PCA | 041350000 | J14 | 6 | Motherboard | 058021100 | J15 | 6 |
| | +12V RET | Relay PCA | 041350000 | J14 | 7 | Motherboard | 058021100 | J15 | 7 |
| | +12V | Relay PCA | 041350000 | J14 | 8 | Motherboard | 058021100 | J15 | 8 |
| | Chassis Gnd | Relay PCA | 041350000 | J14 | 10 | Motherboard | 058021100 | J15 | 9 |
| **06811** | **CBL ASSY, BENCH HEATER** | | | | | | | | |
| | Wheel Heater | Relay PCA | 041350000 | P3 | 1 | Wheel Heater | 055010000 | P1 | 1 |
| | AC Return | Relay PCA | 041350000 | P3 | 4 | Wheel Heater | 055010000 | P1 | 2 |
| | Bench Htr, 115V | Relay PCA | 041350000 | P3 | 2 | Bench Htr | 037250000 | P1 | 1 |
| | Bench Htr, 230V | Relay PCA | 041350000 | P3 | 3 | Bench Htr | 037250000 | P1 | 2 |
| | AC Return | Relay PCA | 041350000 | P3 | 4 | Bench Htr | 037250000 | P1 | 3 |
| | Chassis Gnd | Relay PCA | 041350000 | P3 | 5 | | | | |
| **06815** | **CBL ASSY, AC POWER** | | | | | | | | |
| | AC Line | Power Entry | CN0000073 | | L | Power Switch | SW0000025 | | L |
| | AC Neutral | Power Entry | CN0000073 | | N | Power Switch | SW0000025 | | N |
| | Power Grnd | Power Entry | CN0000073 | | | Shield | | | |
| | Power Grnd | Power Entry | CN0000073 | | | Chassis | | | |
| | AC Line Switched | Power Switch | SW0000025 | | L | PS2 (+12) | 068020000 | SK2 | 1 |
| | AC Neu Switched | Power Switch | SW0000025 | | N | PS2 (+12) | 068020000 | SK2 | 3 |
| | Power Grnd | Power Entry | CN0000073 | | | PS2 (+12) | 068020000 | SK2 | 2 |
| | AC Line Switched | Power Switch | SW0000025 | | L | PS1 (+5, ±15) | 068010000 | SK2 | 1 |
| | AC Neu Switched | Power Switch | SW0000025 | | N | PS1 (+5, ±15) | 068010000 | SK2 | 3 |
| | Power Grnd | Power Entry | CN0000073 | | | PS1 (+5, ±15) | 068010000 | SK2 | 2 |
| | AC Line Switched | Power Switch | SW0000025 | | L | Relay | 041350000 | J1 | 1 |
| | AC Neu Switched | Power Switch | SW0000025 | | N | Relay | 041350000 | J1 | 3 |
| | Power Grnd | Power Entry | CN0000073 | | | Relay | 041350000 | J1 | 2 |

## Interconnect List, T300/M T360/M

(Reference: 0691201B, DCN5947)

| | | FROM | | | | TO | | | |
|---|---|---|---|---|---|---|---|---|---|
| **Cable PN** | **Signal** | **Assembly** | **PN** | **J/P** | **Pin** | **Assembly** | **PN** | **J/P** | **Pin** |
| **06816** | **CBL ASSY, DC POWER** | | | | | | | | |
| | +15 | PS1 | 068010000 | SK1 | 6 | Relay PCA | 041350000 | J13 | 4 |
| | +5 | PS1 | 068010000 | SK1 | 1 | Relay PCA | 041350000 | J13 | 3 |
| | DGND | PS1 | 068010000 | SK1 | 3 | Relay PCA | 041350000 | J13 | 1 |
| | AGND | PS1 | 068010000 | SK1 | 4 | Relay PCA | 041350000 | J13 | 5 |
| | -15 | PS1 | 068010000 | SK1 | 5 | Relay PCA | 041350000 | J13 | 6 |
| | +12 | PS2 | 068020000 | SK1 | 1 | Relay PCA | 041350000 | J13 | 8 |
| | +12 RET | PS2 | 068020000 | SK1 | 3 | Relay PCA | 041350000 | J13 | 7 |
| **06817** | **CBL, RELAY BD TO SOURCE** | | | | | | | | |
| | IR Source Drv | Relay PCA | 041350000 | J16 | 1 | IR Source | 009550500 | P1 | 1 |
| | IR Source Drv | Relay PCA | 041350000 | J16 | 2 | IR Source | 009550500 | P1 | 2 |
| **06917** | **CBL, DC POWER & SIGNAL DISTRIBUTION** | | | | | | | | |
| | +5V | LCD Interface PCA | 066970000 | J14 | 1 | Relay PCA | 041350000 | J12 | 2 |
| | DGND | LCD Interface PCA | 066970000 | J14 | 2 | Relay PCA | 041350000 | J11 | 1 |
| | +5V | LCD Interface PCA | 066970000 | J14 | 3 | Relay PCA | 041350000 | J11 | 2 |
| | SDA | LCD Interface PCA | 066970000 | J14 | 5 | Relay PCA | 041350000 | J5 | 2 |
| | SCL | LCD Interface PCA | 066970000 | J14 | 6 | Relay PCA | 041350000 | J5 | 1 |
| | DGND | LCD Interface PCA | 066970000 | J14 | 8 | Relay PCA | 041350000 | J12 | 1 |
| | Shield | LCD Interface PCA | 066970000 | J14 | 10 | Relay PCA | 041350000 | J5 | 5 |
| | +12V Ret | Fan | 040010000 | P1 | 1 | Relay PCA | 041350000 | J11 | 7 |
| | +12V | Fan | 040010000 | P1 | 2 | Relay PCA | 041350000 | J11 | 8 |
| | AGND | Flow Module | 040030100 | J1 | 3 | Relay PCA | 041350000 | J11 | 3 |
| | +15V | Flow Module | 040030100 | J1 | 6 | Relay PCA | 041350000 | J11 | 4 |
| | Cell Pressure | Flow Module | 040030100 | J1 | 4 | Motherboard | 058021100 | J109 | 5 |
| | Pump Vaccum | Flow Module | 040030100 | J1 | 2 | Motherboard | 058021100 | J109 | 6 |
| | Sample Flow | Flow Module | 040030100 | J1 | 5 | Motherboard | 058021100 | J109 | 2 |
| | | Shield | | | | Motherboard | 058021100 | J109 | 9 |
| | Measure | Sync Demod | 032960000 | J3 | 1 | Motherboard | 058021100 | J109 | 4 |
| | PD Temp | Sync Demod | 032960000 | J3 | 2 | Motherboard | 058021100 | J109 | 1 |
| | Reference | Sync Demod | 032960000 | J3 | 5 | Motherboard | 058021100 | J109 | 3 |
| | AGND | Sync Demod | 032960000 | J3 | 6 | Shield | | | |
| | Dark Switch | Sync Demod | 032960000 | J3 | 4 | Motherboard | 058021100 | J108 | 16 |
| | Sync Error | Sync Demod | 032960000 | J3 | 7 | Motherboard | 058021100 | J108 | 4 |
| | Etest | Sync Demod | 032960000 | J3 | 8 | Motherboard | 058021100 | J108 | 8 |
| **06925** | **CBL ASSY, SYNC DEMOD , DC POWER** | | | | | | | | |
| | DGND | Relay PCA | 041350000 | J15 | 1 | Sync Demod | 032960000 | J2 | 1 |
| | +5V | Relay PCA | 041350000 | J15 | 2 | Sync Demod | 032960000 | J2 | 2 |
| | AGND | Relay PCA | 041350000 | J15 | 3 | Sync Demod | 032960000 | J2 | 3 |
| | +15V | Relay PCA | 041350000 | J15 | 4 | Sync Demod | 032960000 | J2 | 4 |
| | AGND | Relay PCA | 041350000 | J15 | 5 | Sync Demod | 032960000 | J2 | 5 |
| | -15V | Relay PCA | 041350000 | J15 | 6 | Sync Demod | 032960000 | J2 | 6 |
| | DGND | Relay PCA | 041350000 | J15 | 1 | O2 Sensor | 049210000 | P1 | 5 |
| | +5V | Relay PCA | 041350000 | J15 | 2 | O2 Sensor | 049210000 | P1 | 6 |
| | +12V ret | Relay PCA | 041350000 | J15 | 7 | CO2 Sensor | | | GND |
| | +12V | Relay PCA | 041350000 | J15 | 8 | CO2 Sensor | | | +L |
| | O2- | O2 Sensor | | P1 | 9 | Motherboard | 058021100 | P110 | 10 |
| | O2+ | O2 Sensor | | P1 | 10 | Motherboard | 058021100 | P110 | 4 |
| | | Shield | | | | Motherboard | 058021100 | P110 | 7 |
| | CO2- | CO2 Sensor | | | 0 | Motherboard | 058021100 | P110 | 8 |
| | CO2+ | CO2 Sensor | | | V | Motherboard | 058021100 | P110 | 2 |
| **06746** | **CBL, MOTHERBOAD TO CPU** | | | | | | | | |
| | RXD(0) | CPU PCA | 067240000 | COM1 | 1 | Motherboard | 058021100 | J12 | 14 |
| | RTS(0) | CPU PCA | 067240000 | COM1 | 8 | Motherboard | 058021100 | J12 | 13 |
| | TXD(0) | CPU PCA | 067240000 | COM1 | 4 | Motherboard | 058021100 | J12 | 12 |
| | CTS(0) | CPU PCA | 067240000 | COM1 | 7 | Motherboard | 058021100 | J12 | 11 |
| | GND(0) | CPU PCA | 067240000 | COM1 | 6 | Motherboard | 058021100 | J12 | 10 |
| | RXD(1) | CPU PCA | 067240000 | COM2 | 1 | Motherboard | 058021100 | J12 | 9 |
| | RTS(1) | CPU PCA | 067240000 | COM2 | 8 | Motherboard | 058021100 | J12 | 8 |
| | TXD(1) | CPU PCA | 067240000 | COM2 | 4 | Motherboard | 058021100 | J12 | 7 |
| | CTS(1) | CPU PCA | 067240000 | COM2 | 7 | Motherboard | 058021100 | J12 | 6 |
| | GND(1) | CPU PCA | 067240000 | COM2 | 6 | Motherboard | 058021100 | J12 | 5 |
| | 485+ | CPU PCA | 067240000 | CN5 | 1 | Motherboard | 058021100 | J12 | 9 |
| | 485- | CPU PCA | 067240000 | CN5 | 2 | Motherboard | 058021100 | J12 | 7 |
| | GND | CPU PCA | 067240000 | CN5 | 3 | Motherboard | 058021100 | J12 | 5 |
| | Shield | | | | | Motherboard | 058021100 | J12 | 2 |
| **WR256** | **CBL, TRANSMITTER TO LCD INTERFACE PCA** | | | | | | | | |
| | | LCD Interface PCA | 066970000 | J15 | | Transmitter PCA | 068810000 | J1 | |
| | | | | | | | | | |

This page intentionally left blank.

| REVISIONS | | | | |
|---|---|---|---|---|
| REV | DESCRIPTION | DATE | DCN | APPROVED |
| A | INITIAL RELEASE | 9/3/10 | 5833 | KV |
| B | ADDED 360 FAMILY | 12/30/10 | 5947 | KV |

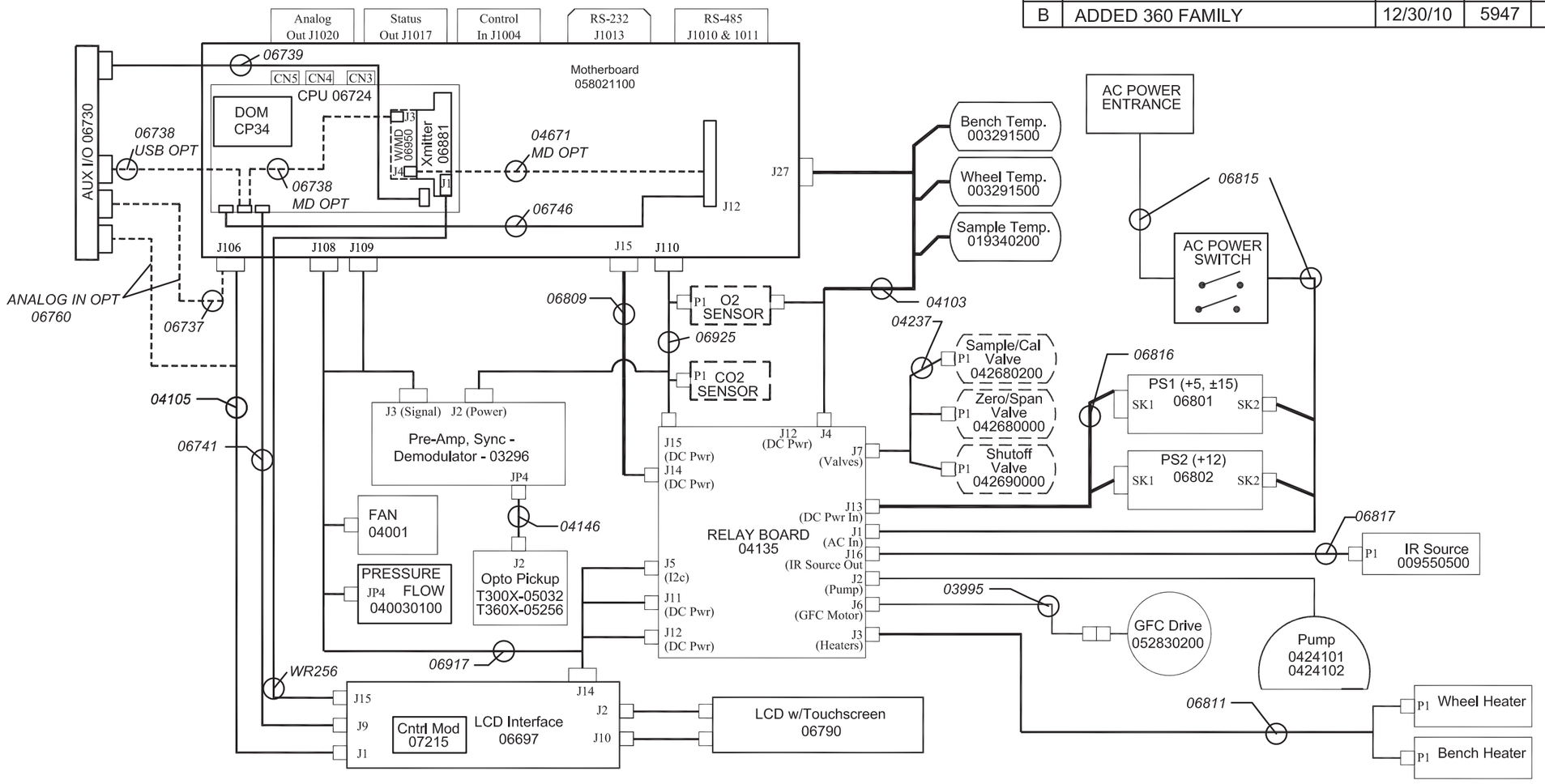


KEY:
1. All part numbers in *Italic* identify cables that are refered to in the accompanying document 069120100.
2. All items in Dashed boxes are optional.

PRINTED DOCUMENTS ARE UNCONTROLLED

The information hereon is the property of API and is submitted in strictest confidence for reference only. Unauthorized use by anyone for any other purposes is prohited. this document or an information contained in it may not be duplicated without proper authorization.

UNLESS OTHERWISE SPECIFIED DIMENSIONS ARE IN INCHES
TOLERANCES ARE:
FRACTIONS ± 1/32 DECIMALS ±.03[0.76] ±.010[0.25] ANGULAR ±0° 30'
DO NOT SCALE DRAWING

TREATMENT: NA
FINISH:
SIMILAR TO:

THIRD ANGLE PROJECTION

CONTRACT: NA

| APPROVALS | DATE |
|---|---|
| DRAWN KV | 4/10 |
| CHECK | |
| CCB | |
| ISSUED | |

TELEDYNE
*Advanced Pollution Instrumentation*
A Teledyne Technologies Company

TITLE: INTERCONNECT DRAWING T300/M & T360/M

| SIZE | CAGE CODE NO. | DWG. NO. | REV |
|---|---|---|---|
| B | 1JZF4 | 06912 | B |

SCALE DNS FILE 06912 SHEET 1 OF 1

+5V RETURN IS A SEPARATE GROUND RETURN, IT MUST BE RUN DIRECTLY BACK TO JP2-1. (30 MIL TRACE WIDTH)

PREAMP

TEC CONTROL

| VERSION | R7 VALUE |
|---|---|
| 00 | 100K |
| 01 | 24.9K |
| 03 | 75K |

| JP1 | Function |
|---|---|
| 1 | Thermistor |
| 2 | Thermistor Return |
| 6 | Detector |
| 7 | Detector Return |
| 8 | TEC Return |
| 9 | TEC Return |

Detector is in a TO-37 package (10 pin circular) with only pins 1,2,6,7,8 & 9 present.

Revision History
Rev.K - DCN5067
-03 option, R7 value = 75K
Rev J - DCN 4242 - RJ
DCR 6270
Change C14 & C15 from 1206 to 1210,
From CA0000144 to CA0000201.
Clear out solder mask from Detector (JP1).
Add test points TP16 & TP17, 0.50 pad.

Note: 1. This schematics is for PCA 03296.
2. Use PCB 03295.

The information herin is the property of TAPI and is submitted in strictest confidence for reference only. Unauthorized use by anyone for any other purpose is prohibited. This document or any informatin contained in it may not be duplicated without proper authorization,.

TELEDYNE INSTRUMENTS
Advanced Pollution Instrumentation
A Teledyne Technologies Company

| APPROVALS | | Schematics for PCA 03296, Sync Demod | | |
|---|---|---|---|---|
| DRAWN | DATE | | | |
| CHECKED | | SIZE B | DRAWING NO. 03297 | REVISION K |
| APPROVED | | LAST MOD. 17-Sep-2008 | SHEET 1 of 3 | |

Printed documents are Uncontrolled.

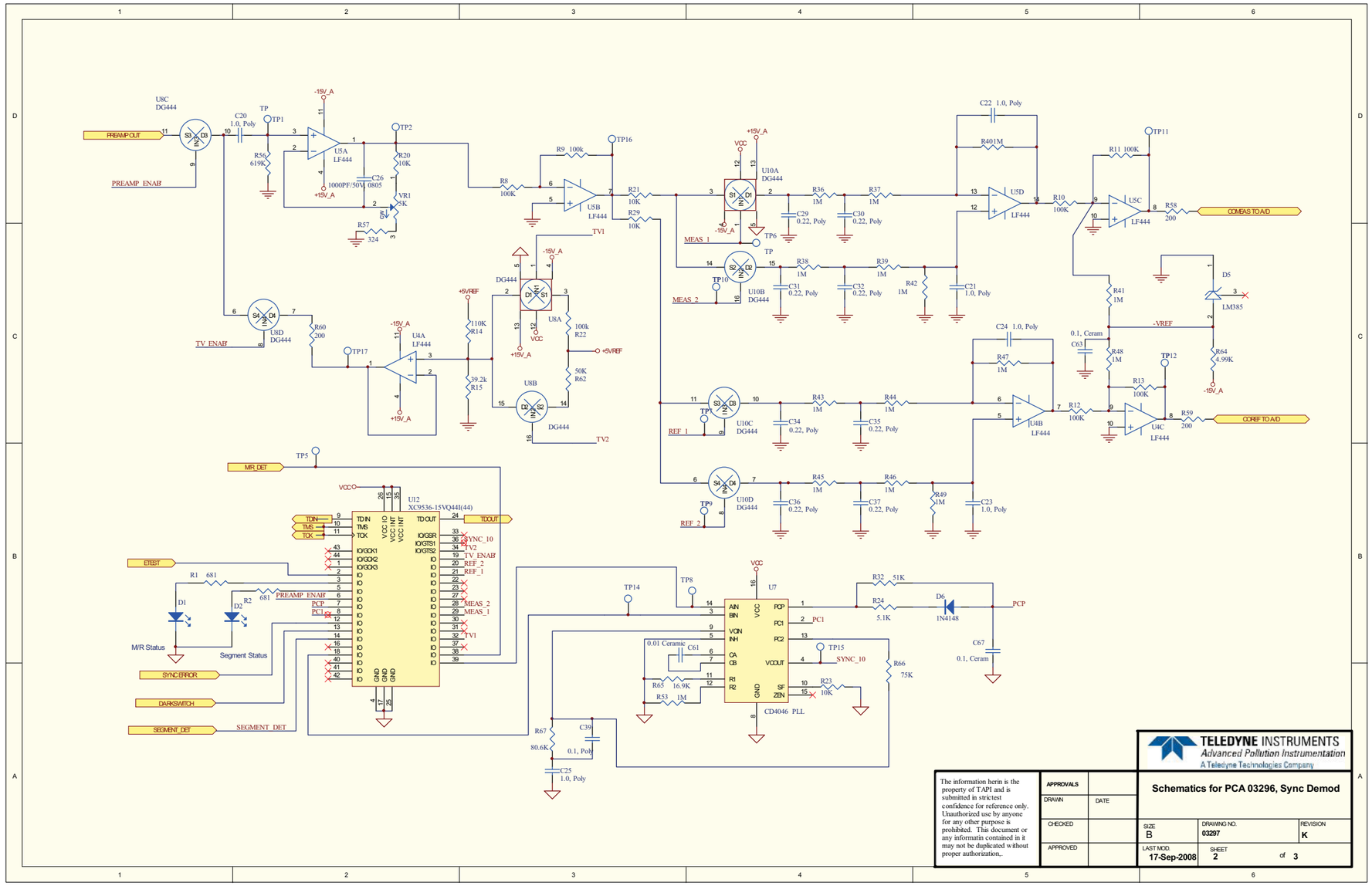
PREAMP OUT
PREAMP_ENAB
TV_ENAB
MR_DET
ETEST
SYNC ERROR
DARKSWITCH
SEGMENT_DET
M/R Status
Segment Status
COMEAS TO A/D
COREF TO A/D
U12
XC9536-15VQ44I(44)
U7
CD4046 PLL
TELEDYNE INSTRUMENTS
Advanced Pollution Instrumentation
A Teledyne Technologies Company
Schematics for PCA 03296, Sync Demod
The information herin is the property of TAPI and is submitted in strictest confidence for reference only. Unauthorized use by anyone for any other purpose is prohibited. This document or any informatin contained in it may not be duplicated without proper authorization,.
APPROVALS
DRAWN
DATE
CHECKED
APPROVED
SIZE
B
DRAWING NO.
03297
REVISION
K
LAST MOD.
17-Sep-2008
SHEET
2
of
3

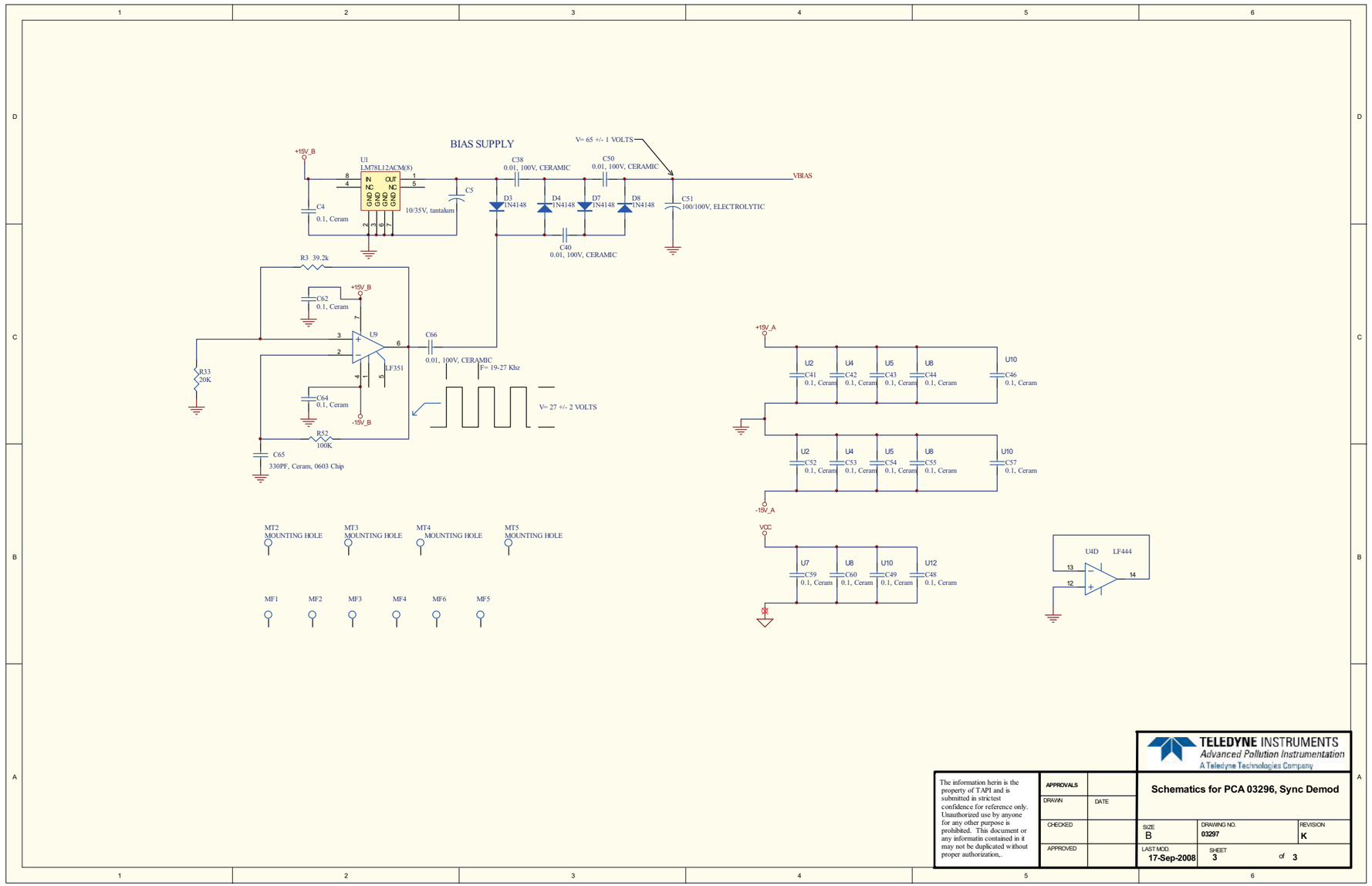
BIAS SUPPLY
V= 65 +/- 1 VOLTS
+15V_B
U1
LM78L12ACM(8)
IN
OUT
NC
NC
GND
GND
GND
GND
GND
C38
0.01, 100V, CERAMIC
C50
0.01, 100V, CERAMIC
VBIAS
C4
0.1, Ceram
C5
10/35V, tantalum
D3
1N4148
D4
1N4148
D7
1N4148
D8
1N4148
C51
100/100V, ELECTROLYTIC
C40
0.01, 100V, CERAMIC
R3 39.2k
C62
0.1, Ceram
U9
LF351
C66
0.01, 100V, CERAMIC
F= 19-27 Khz
R33
20K
C64
0.1, Ceram
-15V_B
V= 27 +/- 2 VOLTS
R52
100K
C65
330PF, Ceram, 0603 Chip
+15V_A
U2
C41
0.1, Ceram
U4
C42
0.1, Ceram
U5
C43
0.1, Ceram
U8
C44
0.1, Ceram
U10
C46
0.1, Ceram
U2
C52
0.1, Ceram
U4
C53
0.1, Ceram
U5
C54
0.1, Ceram
U8
C55
0.1, Ceram
U10
C57
0.1, Ceram
-15V_A
MT2
MOUNTING HOLE
MT3
MOUNTING HOLE
MT4
MOUNTING HOLE
MT5
MOUNTING HOLE
MF1
MF2
MF3
MF4
MF6
MF5
VCC
U7
C59
0.1, Ceram
U8
C60
0.1, Ceram
U10
C49
0.1, Ceram
U12
C48
0.1, Ceram
U4D
LF444
The information herein is the property of TAPI and is submitted in strictest confidence for reference only. Unauthorized use by anyone for any other purpose is prohibited. This document or any informatin contained in it may not be duplicated without proper authorization,.
APPROVALS
DRAWN
DATE
CHECKED
APPROVED
TELEDYNE INSTRUMENTS
Advanced Pollution Instrumentation
A Teledyne Technologies Company
Schematics for PCA 03296, Sync Demod
SIZE
B
DRAWING NO.
03297
REVISION
K
LAST MOD.
17-Sep-2008
SHEET
3
of
3

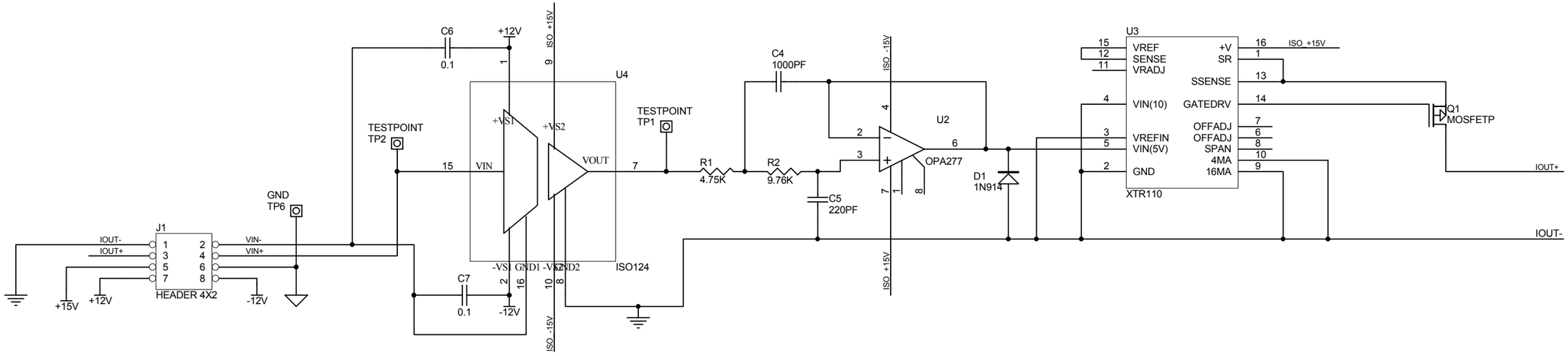


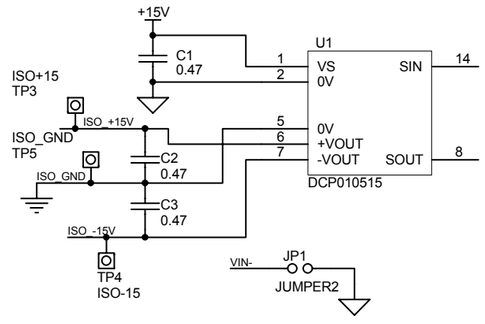


| Date | Rev. | Change Description | Engineer |
|---|---|---|---|
| 8/9/00 | A | INITIAL RELEASE (FROM 03039) | KL |

The information herein is the property of API and is submitted in strictest confidence for reference only. Unauthorized use by anyone for any other purposes is prohibited. This document or any information contained in it may not be duplicated without proper authorization.

Error : LOGO.BMP file not found.

| APPROVALS | DATE |
|---|---|
| DRAWN | |
| CHECKED | |
| APPROVED | |

**PCA 03631, Isolated 0-20ma, E Series**

| SIZE | DRAWING NO. | REVISION |
|---|---|---|
| B | 03632 | A |

| LAST MOD. | SHEET |
|---|---|
| 19-Jul-2002 | 1 of 1 |

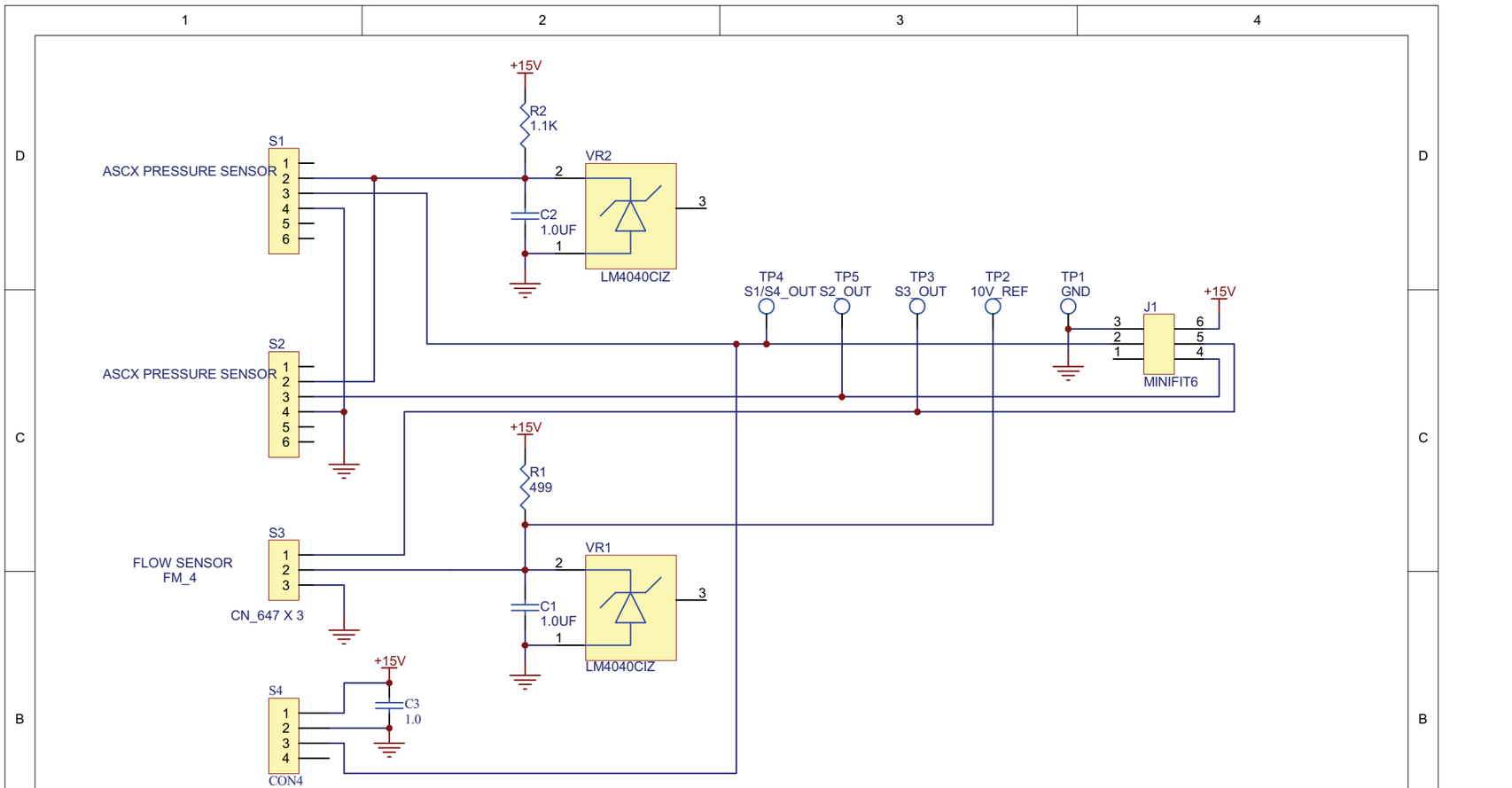


TELEDYNE
INSTRUMENTS
*Advanced Pollution Instrumentation*

The information herein is the property of API and is submitted in strictest confidence for reference only. Unauthorized use by anyone for any other purposes is prohibited. This document or any information contained in it may not be duplicated without proper authorization.

| APPROVALS | DATE |
|---|---|
| DRAWN | |
| CHECKED | |
| APPROVED | |

**SCH, PCA 04003, PRESS/FLOW, 'E' SERIES**

| SIZE | DRAWING NO. | REVISION |
|---|---|---|
| B | 04354 | D |

| LAST MOD. | SHEET |
|---|---|
| 3-Dec-2007 | 1 of 1 |

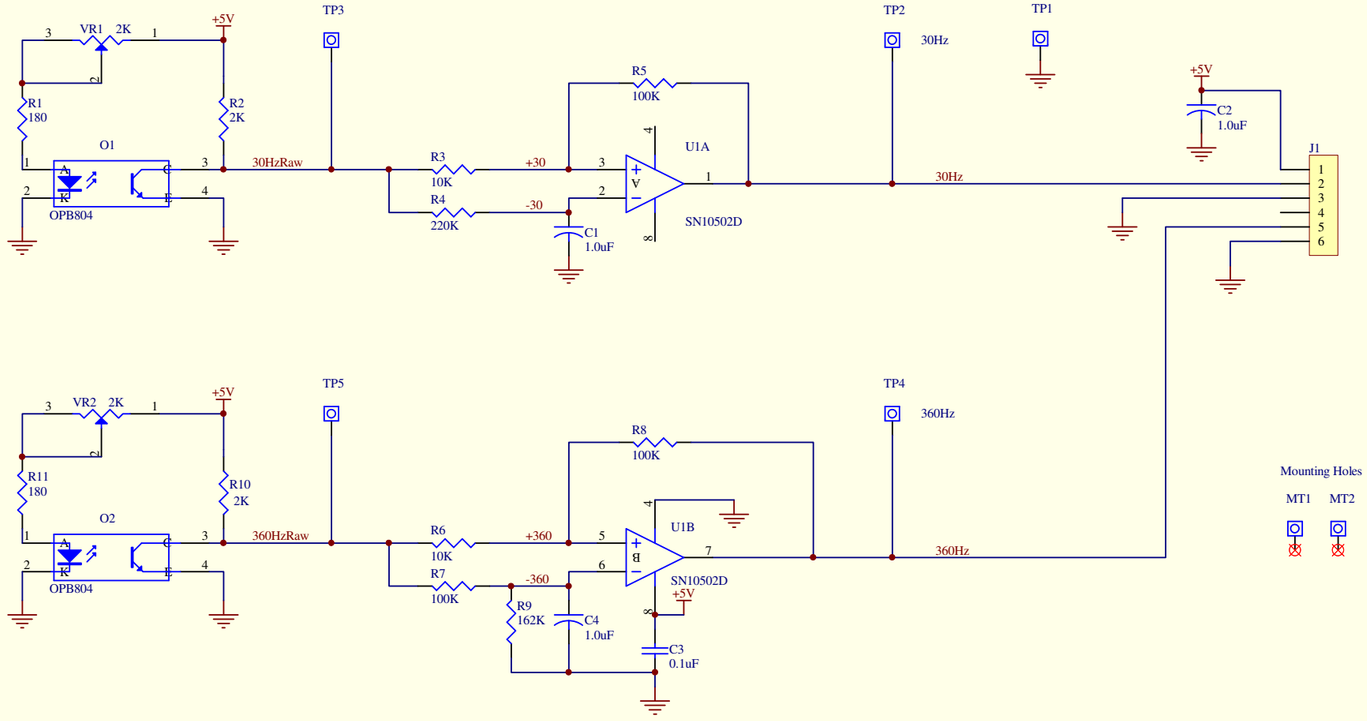


ADVANCED POLLUTION INSTRUMENTATION, INC.

The information herein is the property of API and is submitted in strictest confidence for reference only. Unauthorized use by anyone for any other purposes is prohibited. This document or any information contained in it may not be duplicated without proper authorization.

| | | |
|---|---|---|
| APPROVALS | | Schematics for PWB 05031 and PCA 05032 OPTO-INTERRUPTER |
| DRAWN RJ | DATE 5/17/04 | |
| CHECKED | | SIZE B / DRAWING NO. 05033 / REVISION A |
| APPROVED | | LAST MOD. 8-Jun-2004 / SHEET 1 of 1 |

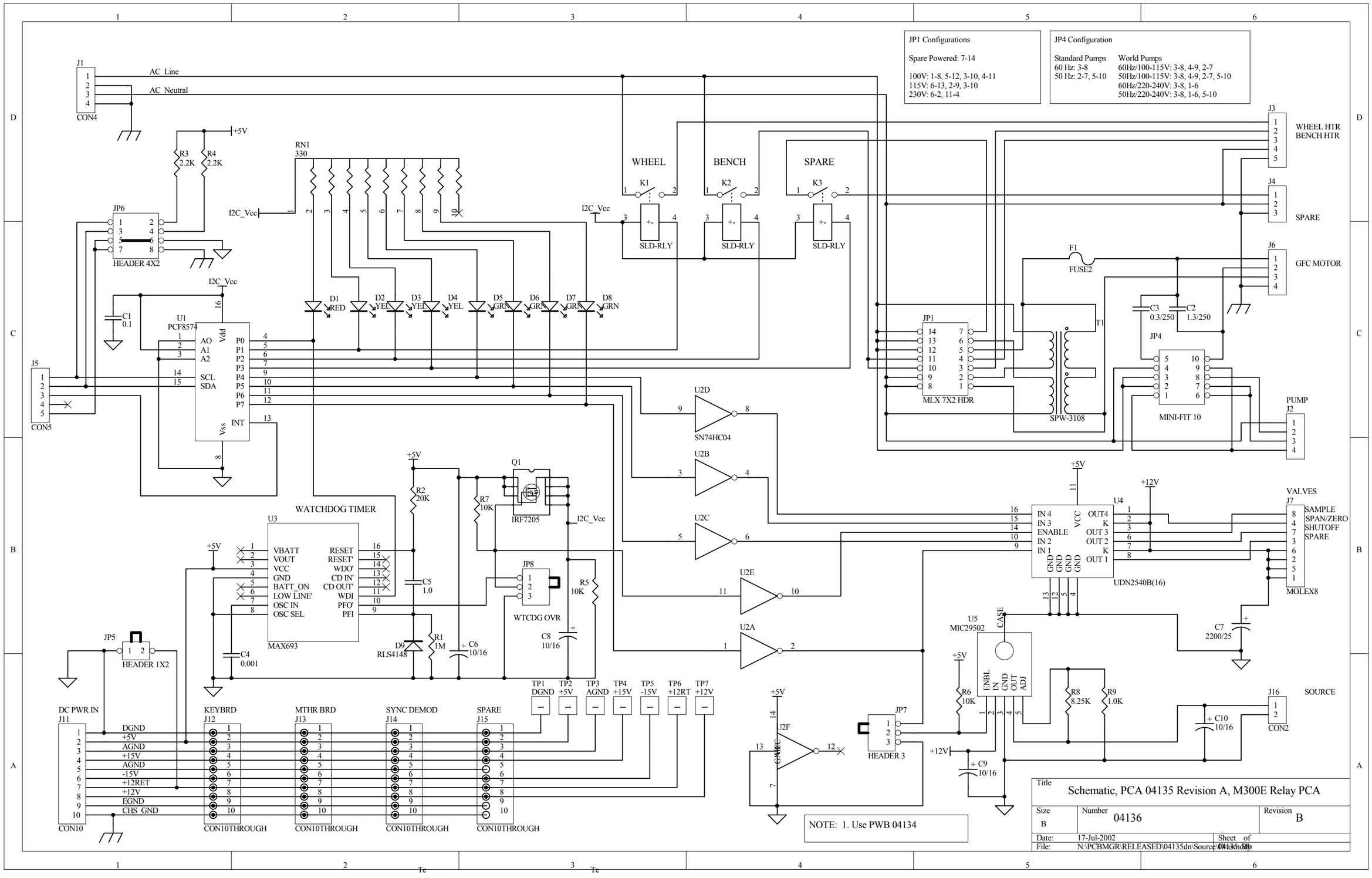
JP1 Configurations
Spare Powered: 7-14
100V: 1-8, 5-12, 3-10, 4-11
115V: 6-13, 2-9, 3-10
230V: 6-2, 11-4
JP4 Configuration
Standard Pumps
60 Hz: 3-8
50 Hz: 2-7, 5-10
World Pumps
60Hz/100-115V: 3-8, 4-9, 2-7
50Hz/100-115V: 3-8, 4-9, 2-7, 5-10
60Hz/220-240V: 3-8, 1-6
50Hz/220-240V: 3-8, 1-6, 5-10
J1
CON4
AC_Line
AC_Neutral
+5V
R3 2.2K
R4 2.2K
JP6
HEADER 4X2
RN1 330
I2C_Vcc
WHEEL
BENCH
SPARE
K1
K2
K3
SLD-RLY
J3
WHEEL HTR
BENCH HTR
J4
SPARE
J6
GFC MOTOR
F1
FUSE2
C3 0.3/250
C2 1.3/250
JP1
MLX 7X2 HDR
T1
SPW-3108
JP4
MINI-FIT 10
PUMP
J2
D1 RED
D2 YEL
D3 YEL
D4 YEL
D5 GRN
D6 GRN
D7 GRN
D8 GRN
C1 0.1
U1
PCF8574
AO
A1
A2
SCL
SDA
Vdd
Vss
P0
P1
P2
P3
P4
P5
P6
P7
INT
J5
CON5
U2D
SN74HC04
U2B
U2C
U2E
U2A
Q1
IRF7205
R2 20K
R7 10K
WATCHDOG TIMER
U3
MAX693
VBATT
VOUT
VCC
GND
BATT_ON
LOW LINE'
OSC IN
OSC SEL
RESET
RESET'
WDO'
CD IN'
CD OUT'
WDI
PFO'
PFI
C5 1.0
C4 0.001
D9 RLS4148
R1 1M
C6 10/16
JP8
WTCDG OVR
R5 10K
C8 10/16
JP5
HEADER 1X2
U4
UDN2540B(16)
IN 4
IN 3
ENABLE
IN 2
IN 1
VCC
OUT4
K
OUT 3
OUT 2
K
OUT 1
GND
+12V
VALVES
J7
SAMPLE
SPAN/ZERO
SHUTOFF
SPARE
MOLEX8
C7 2200/25
U5
MIC29502
CASE
ENBL
IN
GND
OUT
ADJ
R6 10K
R8 8.25K
R9 1.0K
C10 10/16
J16
SOURCE
CON2
JP7
HEADER 3
C9 10/16
U2F
GND
DC PWR IN
J11
CON10
DGND
+5V
AGND
+15V
AGND
-15V
+12RET
+12V
EGND
CHS_GND
KEYBRD
J12
CON10THROUGH
MTHR BRD
J13
CON10THROUGH
SYNC DEMOD
J14
CON10THROUGH
SPARE
J15
CON10THROUGH
TP1 DGND
TP2 +5V
TP3 AGND
TP4 +15V
TP5 -15V
TP6 +12RT
TP7 +12V
NOTE: 1. Use PWB 04134
Title
Schematic, PCA 04135 Revision A, M300E Relay PCA
Size
B
Number
04136
Revision
B
Date: 17-Jul-2002
Sheet of
File: N:\PCBMGR\RELEASED\04135dn\Source\04135.dbt
Drawn by:

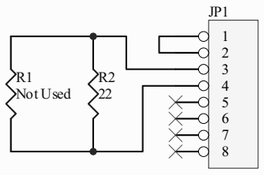


| | | |
|---|---|---|
| Title | SCH, E-Series Analog Output Isolator, PCA 04467 | |
| Size: A | Number: 04468 | Revision: B |
| Date: 6/28/2004 | | Sheet of |
| File: N:\PCBMGR\..\04468B.sch | | Drawn By: |

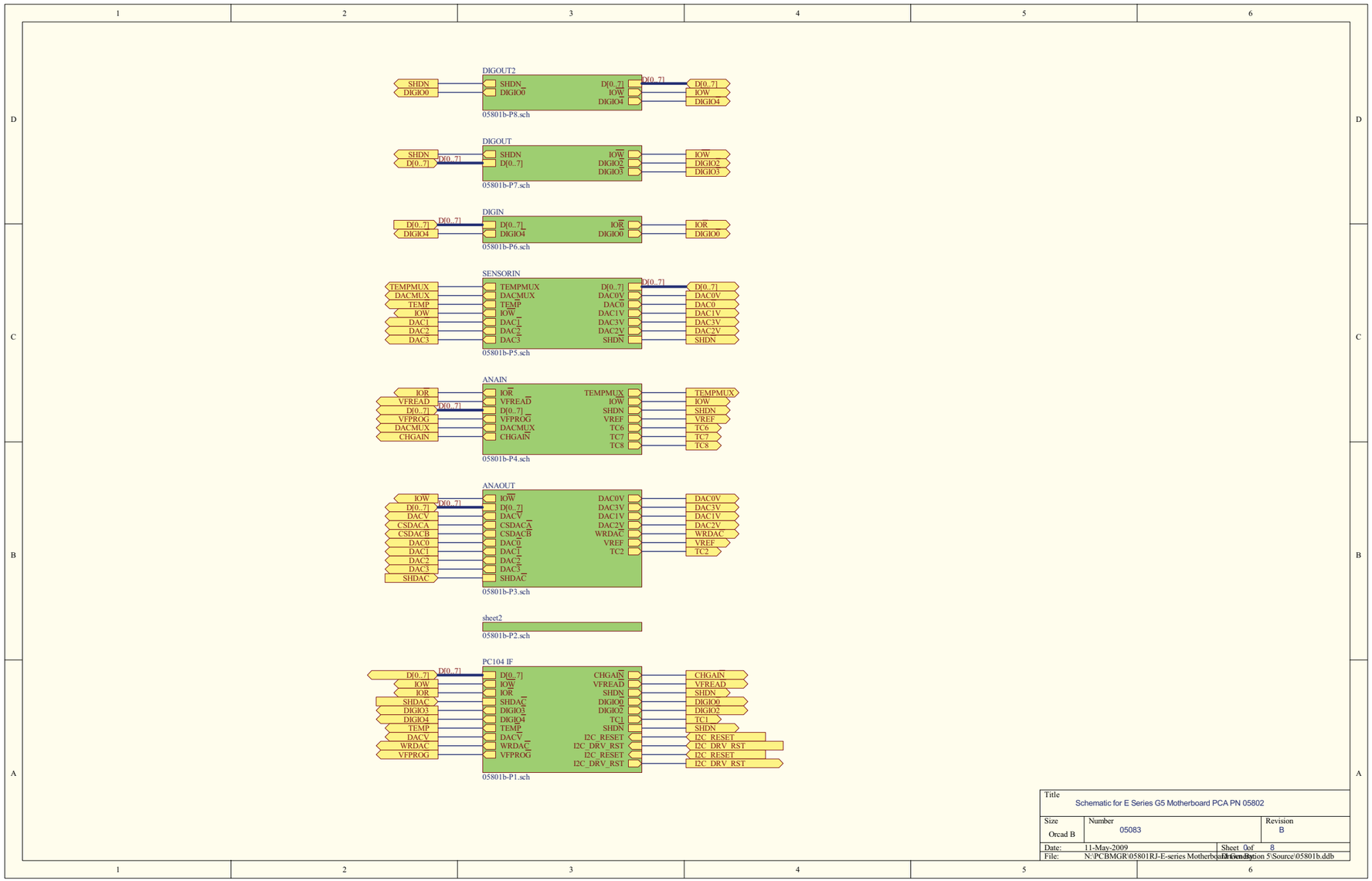
1
2
3
4
5
6
D
C
B
A
DIGOUT2
SHDN
DIGIO0
SHDN
DIGIO0
D[0..7]
D[0..7]
IOW
DIGIO4
D[0..7]
IOW
DIGIO4
05801b-P8.sch
DIGOUT
SHDN
D[0..7]
D[0..7]
SHDN
D[0..7]
IOW
DIGIO2
DIGIO3
IOW
DIGIO2
DIGIO3
05801b-P7.sch
DIGIN
D[0..7]
DIGIO4
D[0..7]
D[0..7]
DIGIO4
IOR
DIGIO0
IOR
DIGIO0
05801b-P6.sch
SENSORIN
TEMPMUX
DACMUX
TEMP
IOW
DAC1
DAC2
DAC3
TEMPMUX
DACMUX
TEMP
IOW
DAC1
DAC2
DAC3
D[0..7]
DAC0V
DAC0
DAC1V
DAC3V
DAC2V
SHDN
D[0..7]
DAC0V
DAC0
DAC1V
DAC3V
DAC2V
SHDN
05801b-P5.sch
ANAIN
IOR
VFREAD
D[0..7]
VFPROG
DACMUX
CHGAIN
D[0..7]
IOR
VFREAD
D[0..7]
VFPROG
DACMUX
CHGAIN
TEMPMUX
IOW
SHDN
VREF
TC6
TC7
TC8
TEMPMUX
IOW
SHDN
VREF
TC6
TC7
TC8
05801b-P4.sch
ANAOUT
IOW
D[0..7]
DACV
CSDACA
CSDACB
DAC0
DAC1
DAC2
DAC3
SHDAC
D[0..7]
IOW
D[0..7]
DACV
CSDACA
CSDACB
DAC0
DAC1
DAC2
DAC3
SHDAC
DAC0V
DAC3V
DAC1V
DAC2V
WRDAC
VREF
TC2
DAC0V
DAC3V
DAC1V
DAC2V
WRDAC
VREF
TC2
05801b-P3.sch
sheet2
05801b-P2.sch
PC104 IF
D[0..7]
IOW
IOR
SHDAC
DIGIO3
DIGIO4
TEMP
DACV
WRDAC
VFPROG
D[0..7]
D[0..7]
IOW
IOR
SHDAC
DIGIO3
DIGIO4
TEMP
DACV
WRDAC
VFPROG
CHGAIN
VFREAD
SHDN
DIGIO0
DIGIO2
TC1
SHDN
I2C_RESET
I2C_DRV_RST
I2C_RESET
I2C_DRV_RST
CHGAIN
VFREAD
SHDN
DIGIO0
DIGIO2
TC1
SHDN
I2C_RESET
I2C_DRV_RST
I2C_RESET
I2C_DRV_RST
05801b-P1.sch
Title
Schematic for E Series G5 Motherboard PCA PN 05802
Size
Orcad B
Number
05083
Revision
B
Date:
11-May-2009
Sheet 0of 8
File:
N:\PCBMGR\05801RJ-E-series Motherboard\Revision 5\Source\05801b.ddb
Drawn By:

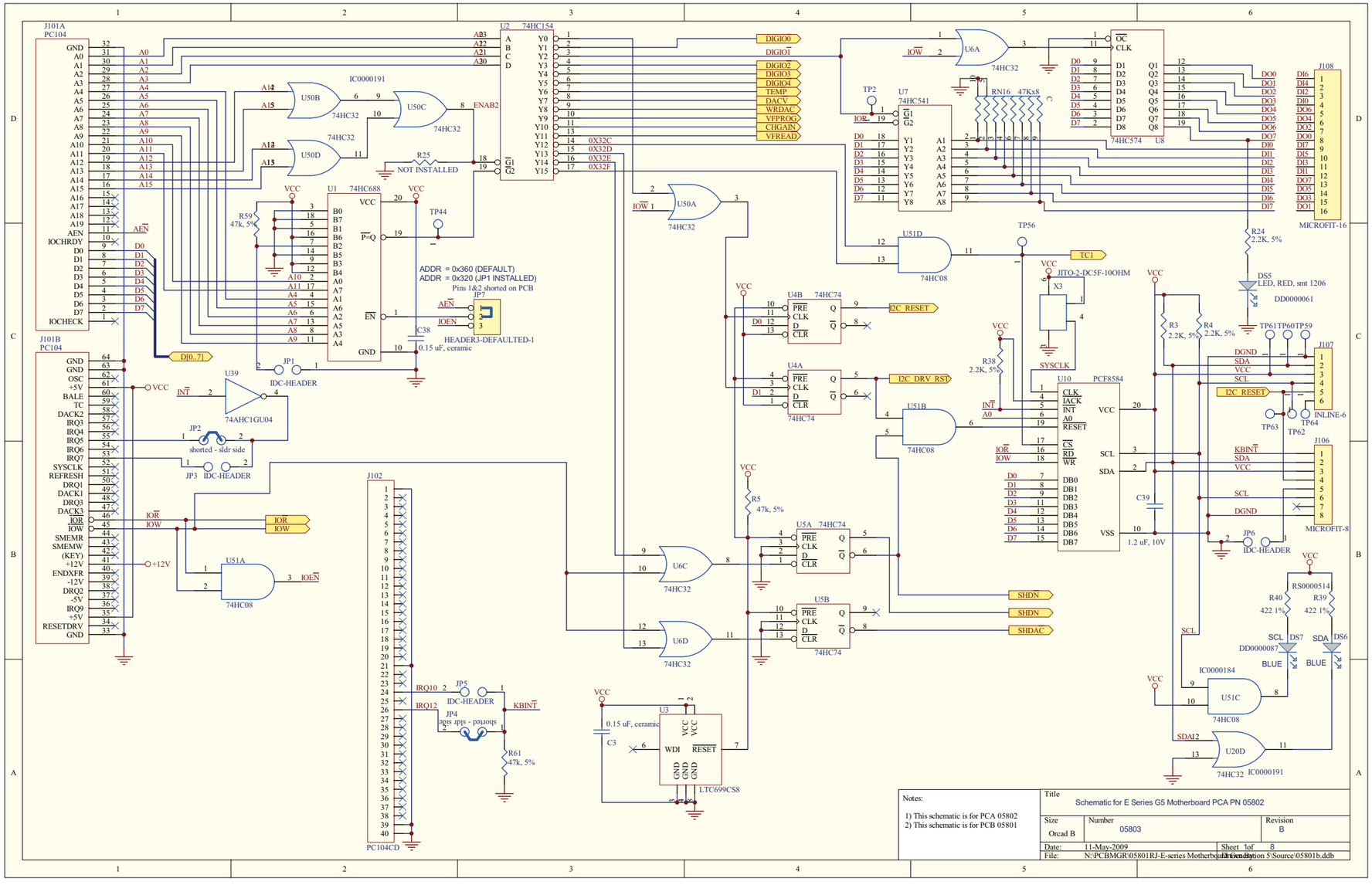
J101A
PC104
J101B
PC104
U1 74HC688
U2 74HC154
U50B
U50C
U50D
U50A
U6A
U6C
U6D
U51A
U51B
U51C
U51D
U20D
U4A
U4B
U5A 74HC74
U5B
U7 74HC541
U8 74HC574
U10 PCF8584
U39 74AHC1GU04
U3 LTC699CS8
IC0000191
ADDR = 0x360 (DEFAULT)
ADDR = 0x320 (JP1 INSTALLED)
Pins 1&2 shorted on PCB
HEADER3-DEFAULTED-1
IDC-HEADER
shorted - sldr side
NOT INSTALLED
JITO-2-DC5F-10OHM
LED, RED, smt 1206
DD0000061
DD0000087
RS0000514
RN16 47Kx8
MICROFIT-16
MICROFIT-8
INLINE-6
1.2 uF, 10V
0.15 uF, ceramic
PC104CD
Notes:
1) This schematic is for PCA 05802
2) This schematic is for PCB 05801
Title
Schematic for E Series G5 Motherboard PCA PN 05802
Size
Orcad B
Number
05803
Revision
B
Date: 11-May-2009
Sheet 1of 8
File: N:\PCBMGR\05801RJ-E-series Motherboard\Revision 5\Source\05801b.ddb

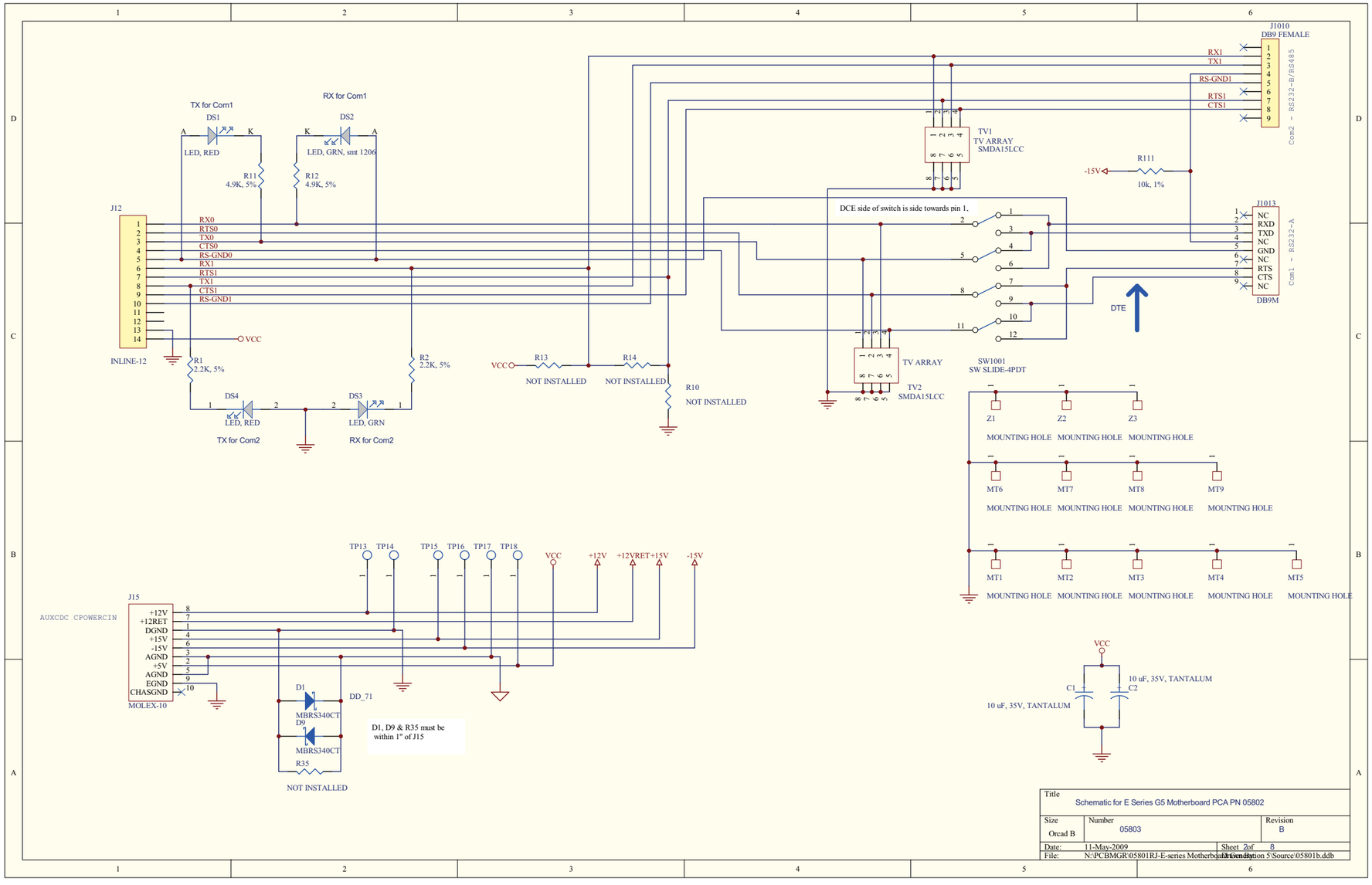
TX for Com1
DS1
LED, RED
R11
4.9K, 5%
RX for Com1
DS2
LED, GRN, smt 1206
R12
4.9K, 5%
J12
INLINE-12
RX0
RTS0
TX0
CTS0
RS-GND0
RX1
RTS1
TX1
CTS1
RS-GND1
VCC
R1
2.2K, 5%
R2
2.2K, 5%
DS4
LED, RED
TX for Com2
DS3
LED, GRN
RX for Com2
R13
NOT INSTALLED
R14
NOT INSTALLED
R10
NOT INSTALLED
TV1
TV ARRAY
SMDA15LCC
TV2
SMDA15LCC
DCE side of switch is side towards pin 1.
DTE
J1010
DB9 FEMALE
Com2 - RS232-B/RS485
R111
-15V
10k, 1%
J1013
DB9M
Com1 - RS232-A
NC
RXD
TXD
GND
RTS
CTS
SW1001
SW SLIDE-4PDT
Z1
Z2
Z3
MOUNTING HOLE
MT1
MT2
MT3
MT4
MT5
MT6
MT7
MT8
MT9
J15
AUXCDC CPOWERCIN
MOLEX-10
+12V
+12RET
DGND
+15V
-15V
AGND
+5V
AGND
EGND
CHASGND
TP13
TP14
TP15
TP16
TP17
TP18
VCC
+12V
+12VRET
+15V
-15V
D1
MBRS340CT
DD_71
D9
MBRS340CT
R35
NOT INSTALLED
D1, D9 & R35 must be within 1" of J15
C1
C2
10 uF, 35V, TANTALUM
Title
Schematic for E Series G5 Motherboard PCA PN 05802
Size
Orcad B
Number
05803
Revision
B
Date:
11-May-2009
Sheet 2 of 8
File:
N:\PCBMGR\05801RJ-E-series Motherboard Revision 5\Source\05801b.ddb

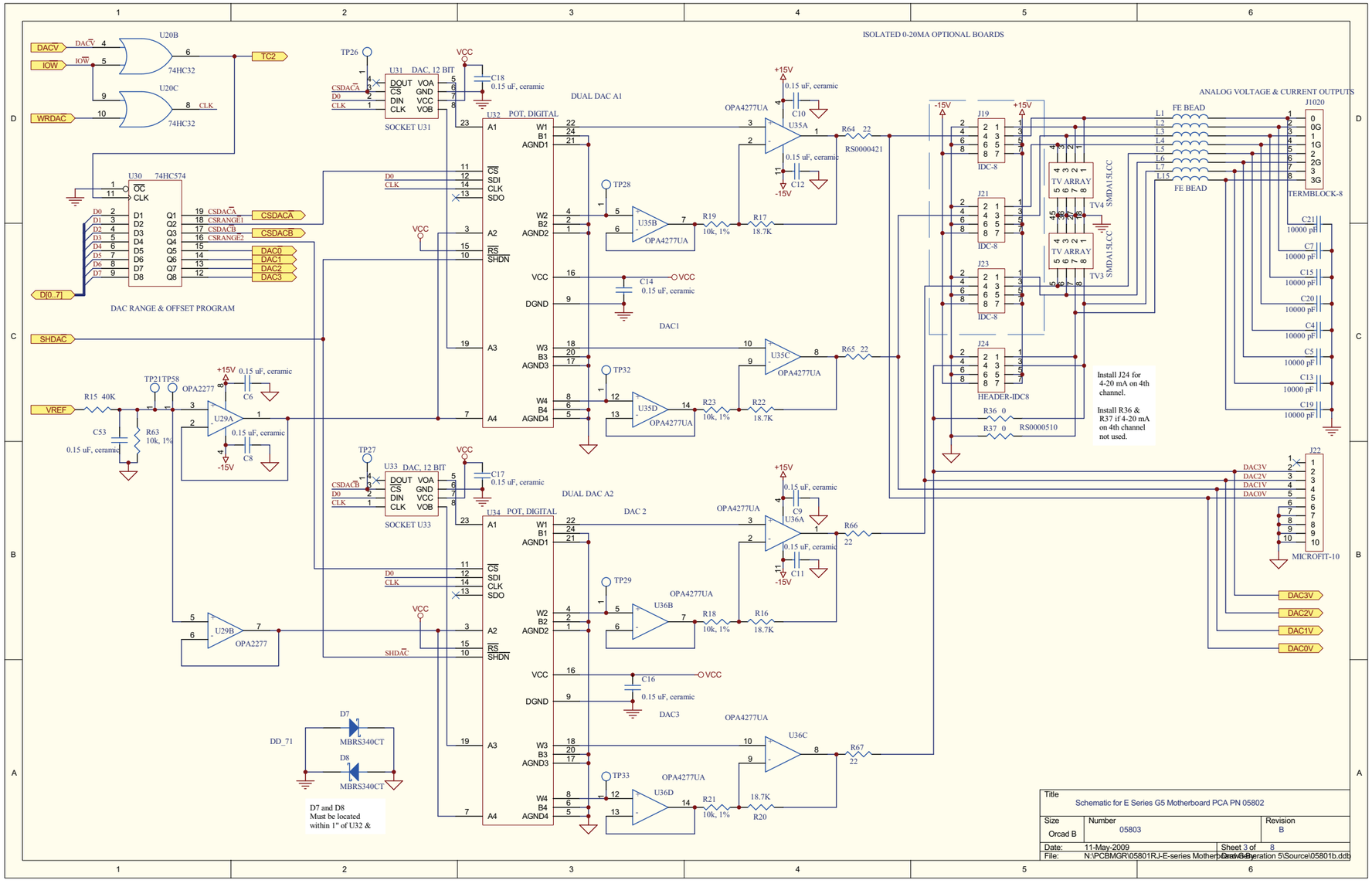
ISOLATED 0-20MA OPTIONAL BOARDS
ANALOG VOLTAGE & CURRENT OUTPUTS
DAC RANGE & OFFSET PROGRAM
DUAL DAC A1
DUAL DAC A2
DAC1
DAC2
DAC3
SOCKET U31
SOCKET U33
U20B
U20C
74HC32
U30 74HC574
U31 DAC, 12 BIT
U32 POT, DIGITAL
U33 DAC, 12 BIT
U34 POT, DIGITAL
U29A
U29B
OPA2277
OPA4277UA
U35A
U35B
U35C
U35D
U36A
U36B
U36C
U36D
DACV
IOW
WRDAC
TC2
CLK
D[0..7]
SHDAC
VREF
CSDACA
CSDACB
DAC0
DAC1
DAC2
DAC3
SHDN
R15 40K
R63 10k, 1%
C53 0.15 uF, ceramic
C6 0.15 uF, ceramic
C8 0.15 uF, ceramic
C18 0.15 uF, ceramic
C17 0.15 uF, ceramic
C10 0.15 uF, ceramic
C12 0.15 uF, ceramic
C9 0.15 uF, ceramic
C11 0.15 uF, ceramic
C14 0.15 uF, ceramic
C16 0.15 uF, ceramic
R19 10k, 1%
R23 10k, 1%
R18 10k, 1%
R21 10k, 1%
R17 18.7K
R22 18.7K
R16 18.7K
R20 18.7K
R64 22
R65 22
R66 22
R67 22
RS0000421
RS0000510
R36 0
R37 0
D7 MBRS340CT
D8 MBRS340CT
DD_71
D7 and D8
Must be located
within 1" of U32 &
J19
J21
J23
J24
IDC-8
HEADER-IDC8
TV ARRAY
SMDA15LCC
FE BEAD
J1020
TERMBLOCK-8
J22
MICROFIT-10
C21 10000 pH
C7 10000 pF
C15 10000 pF
C20 10000 pF
C4 10000 pF
C5 10000 pF
C13 10000 pF
C19 10000 pF
Install J24 for
4-20 mA on 4th
channel.
Install R36 &
R37 if 4-20 mA
on 4th channel
not used.
Title
Schematic for E Series G5 Motherboard PCA PN 05802
Size
Orcad B
Number
05803
Revision
B
Date: 11-May-2009
Sheet 3 of 8
File: N:\PCBMGR\05801RJ-E-series Motherboard\Gen 5 Generation 5\Source\05801b.ddb

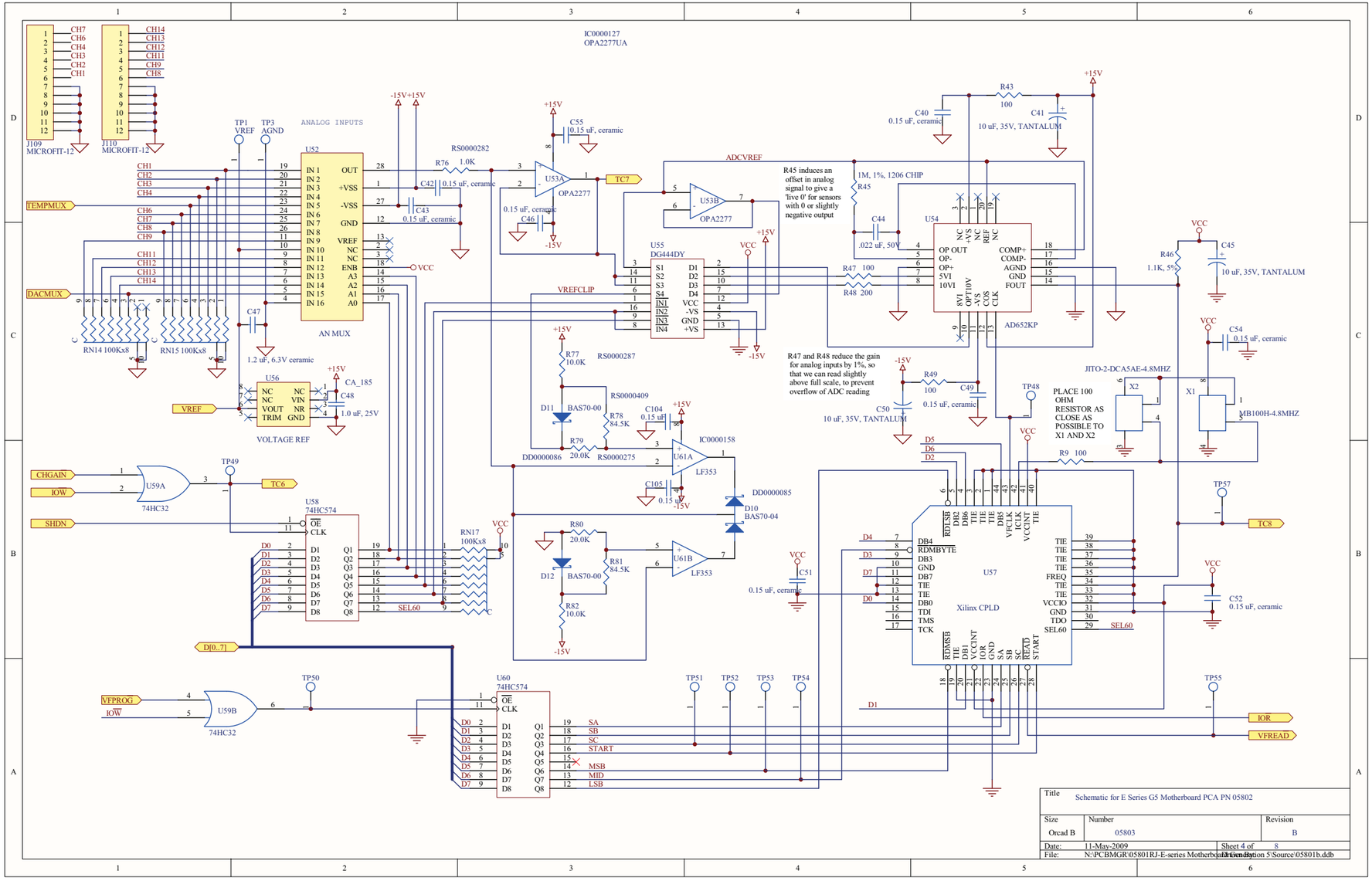
IC0000127
OPA2277UA
ANALOG INPUTS
AN MUX
VOLTAGE REF
U52
U53A
OPA2277
U53B
OPA2277
U55
DG444DY
U54
AD652KP
U56
U58
74HC574
U59A
74HC32
U59B
74HC32
U60
74HC574
U61A
LF353
U61B
LF353
U57
Xilinx CPLD
ADCVREF
VREFCLIP
TEMPMUX
DACMUX
CHGAIN
IOW
SHDN
VFPROG
VREF
IOR
VFREAD
SEL60
JITO-2-DCA5AE-4.8MHZ
MB100H-4.8MHZ
PLACE 100 OHM RESISTOR AS CLOSE AS POSSIBLE TO X1 AND X2
R45 induces an offset in analog signal to give a 'live 0' for sensors with 0 or slightly negative output
R47 and R48 reduce the gain for analog inputs by 1%, so that we can read slightly above full scale, to prevent overflow of ADC reading
Title
Schematic for E Series G5 Motherboard PCA PN 05802
Size
Orcad B
Number
05803
Revision
B
Date: 11-May-2009
Sheet 4 of 8
File: N:\PCBMGR\05801RJ-E-series Motherboard Design Revision 5\Source\05801b.ddb

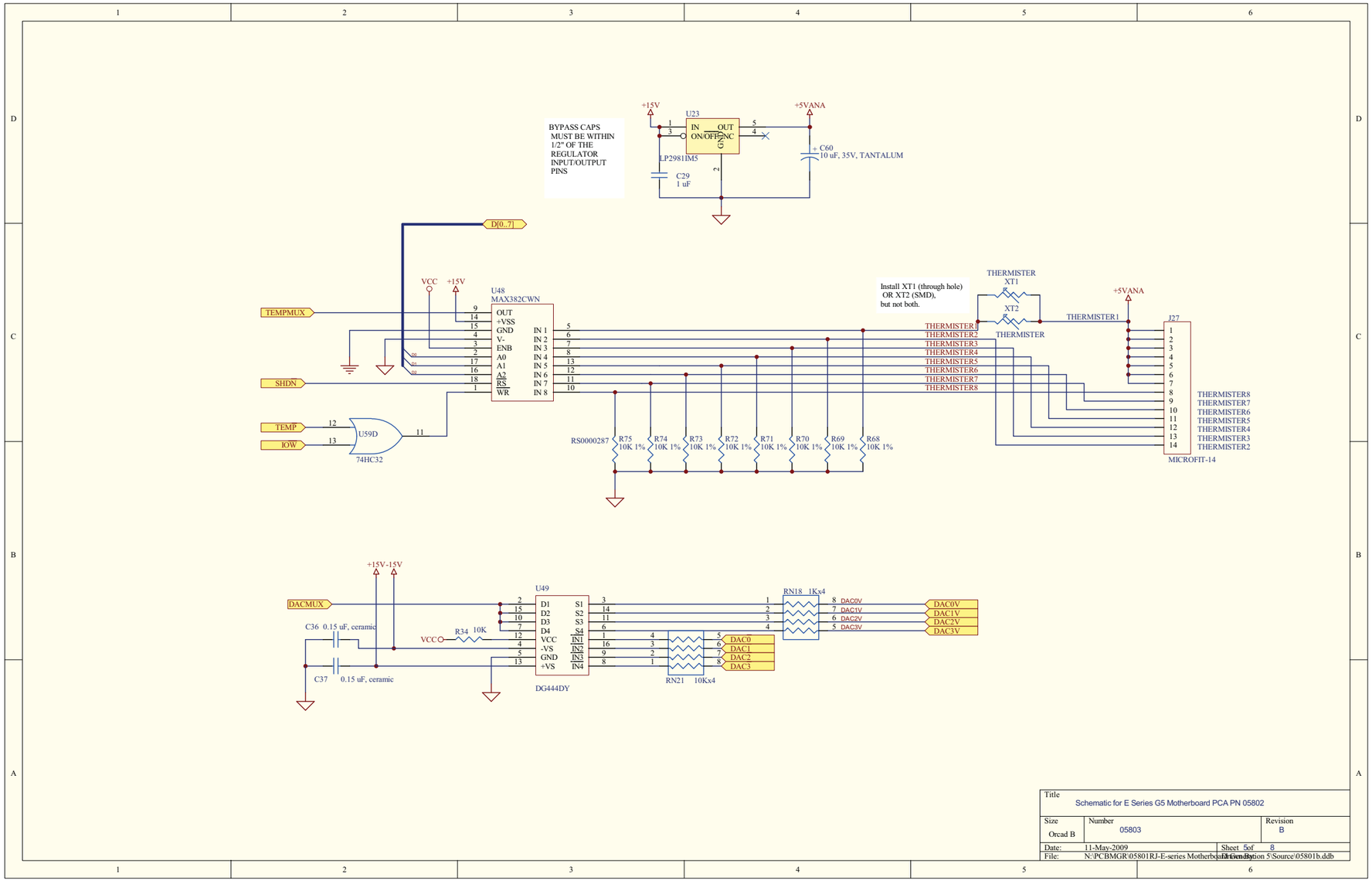
BYPASS CAPS MUST BE WITHIN 1/2" OF THE REGULATOR INPUT/OUTPUT PINS
+15V
U23
IN
OUT
ON/OFF
GND
LP2981IM5
+5VANA
+ C60
10 uF, 35V, TANTALUM
C29
1 uF
D[0..7]
VCC
+15V
U48
MAX382CWN
TEMPMUX
SHDN
TEMP
IOW
U59D
74HC32
Install XT1 (through hole) OR XT2 (SMD), but not both.
THERMISTER XT1
XT2
THERMISTER
THERMISTER1
THERMISTER2
THERMISTER3
THERMISTER4
THERMISTER5
THERMISTER6
THERMISTER7
THERMISTER8
J27
MICROFIT-14
RS0000287
R75 10K 1%
R74 10K 1%
R73 10K 1%
R72 10K 1%
R71 10K 1%
R70 10K 1%
R69 10K 1%
R68 10K 1%
+15V-15V
U49
DACMUX
C36 0.15 uF, ceramic
C37 0.15 uF, ceramic
R34 10K
VCC
DG444DY
RN21 10Kx4
RN18 1Kx4
DAC0V
DAC1V
DAC2V
DAC3V
DAC0
DAC1
DAC2
DAC3
Title
Schematic for E Series G5 Motherboard PCA PN 05802
Size
Orcad B
Number
05803
Revision
B
Date:
11-May-2009
Sheet 5of 8
File:
N:\PCBMGR\05801RJ-E-series Motherboard Gen 5\Source\05801b.ddb
Drawn By:

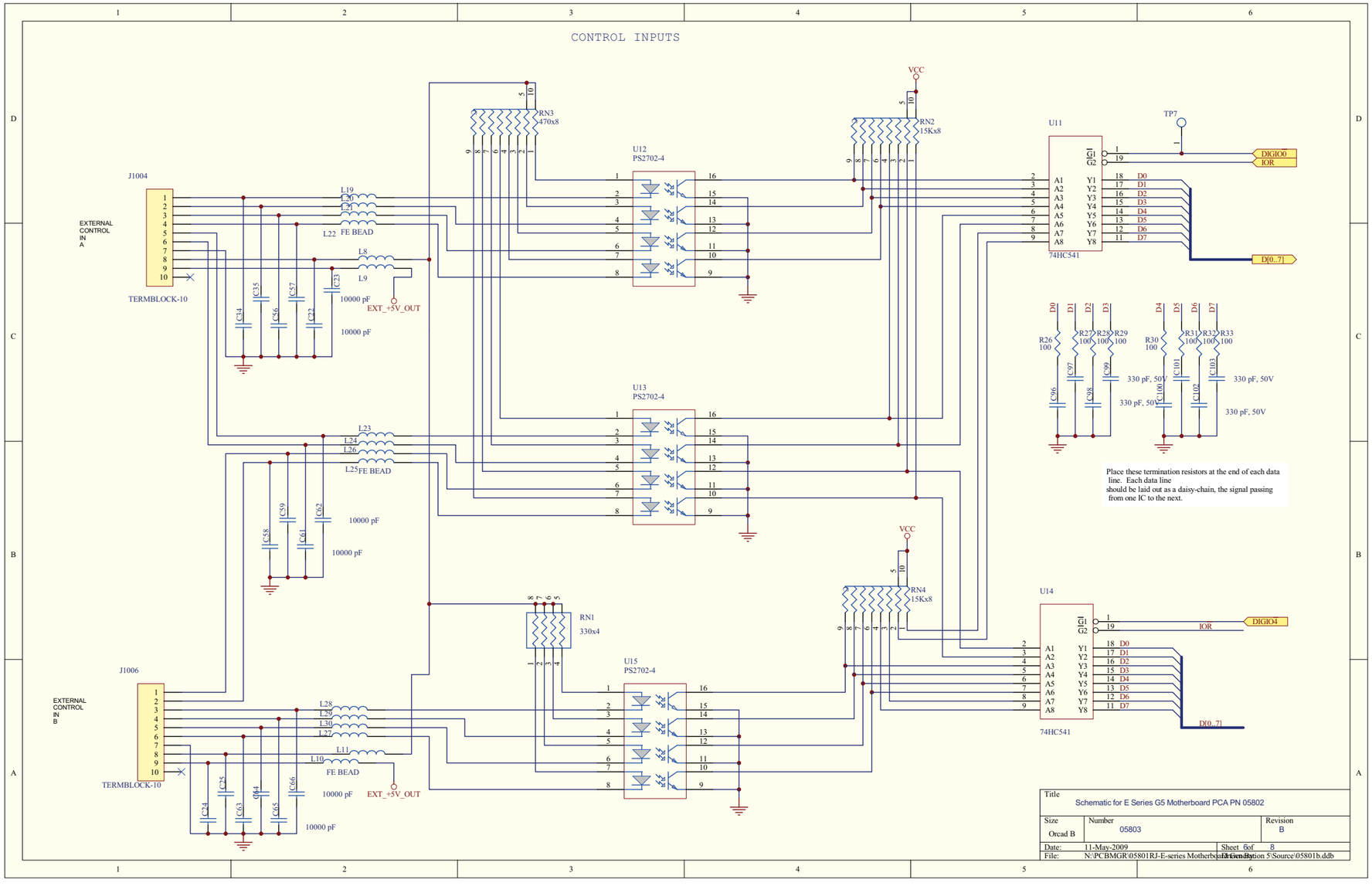
CONTROL INPUTS
J1004
EXTERNAL CONTROL IN A
TERMBLOCK-10
L19
L20
L21
L22 FE BEAD
L8
L9
C35
C57
C23
C34
C56
C22
10000 pF
EXT_+5V_OUT
RN3
470x8
U12
PS2702-4
VCC
RN2
15Kx8
U11
74HC541
TP7
DIGIO0
IOR
D[0..7]
D0
D1
D2
D3
D4
D5
D6
D7
R26 100
R27 100
R28 100
R29 100
R30 100
R31 100
R32 100
R33 100
C96
C97
C98
C99
C100
C101
C102
C103
330 pF, 50V
Place these termination resistors at the end of each data line. Each data line should be laid out as a daisy-chain, the signal passing from one IC to the next.
U13
PS2702-4
L23
L24
L26
L25 FE BEAD
C59
C62
C58
C61
10000 pF
J1006
EXTERNAL CONTROL IN B
TERMBLOCK-10
L28
L29
L30
L27
L11
L10
FE BEAD
C25
C63
C64
C65
C66
C24
EXT_+5V_OUT
RN1
330x4
U15
PS2702-4
RN4
15Kx8
U14
74HC541
DIGIO4
IOR
D[0..7]
Title
Schematic for E Series G5 Motherboard PCA PN 05802
Size
Orcad B
Number
05803
Revision
B
Date: 11-May-2009
Sheet 6of 8
File: N:\PCBMGR\05801RJ-E-series Motherboard Revision 5\Source\05801b.ddb

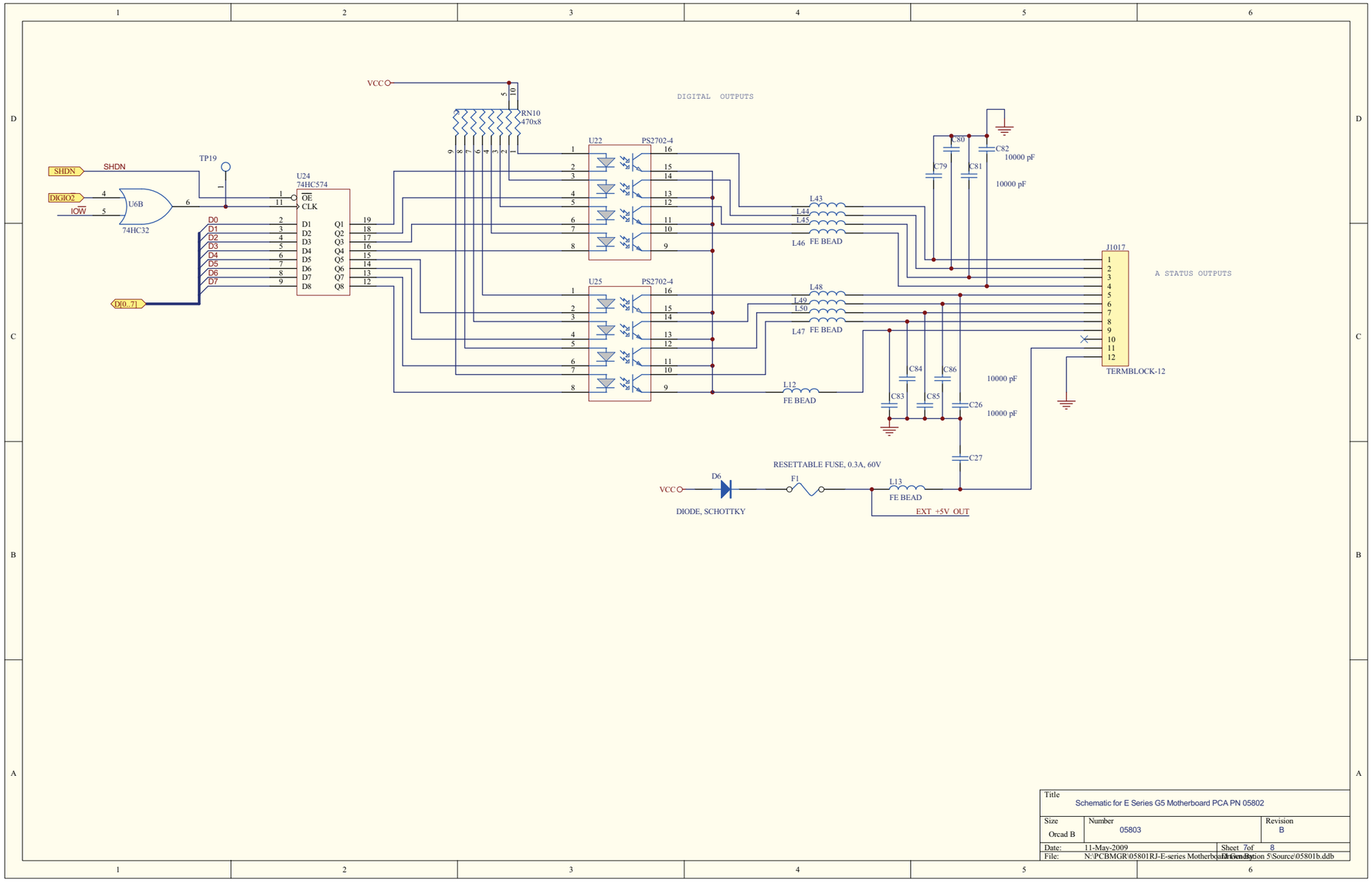
DIGITAL OUTPUTS
VCC
RN10
470x8
SHDN
DIGIO2
IOW
U6B
74HC32
TP19
U24
74HC574
OE
CLK
D0
D1
D2
D3
D4
D5
D6
D7
D[0..7]
U22
PS2702-4
U25
PS2702-4
L43
L44
L45
L46
FE BEAD
L48
L49
L50
L47
FE BEAD
L12
FE BEAD
C80
C82
10000 pF
C79
C81
10000 pF
C84
C86
C83
C85
C26
10000 pF
C27
J1017
A STATUS OUTPUTS
TERMBLOCK-12
RESETTABLE FUSE, 0.3A, 60V
D6
F1
L13
FE BEAD
VCC
DIODE, SCHOTTKY
EXT +5V OUT
Title
Schematic for E Series G5 Motherboard PCA PN 05802
Size
Orcad B
Number
05803
Revision
B
Date:
11-May-2009
Sheet 7of 8
File:
N:\PCBMGR\05801RJ-E-series Motherboard Revision 5\Source\05801b.ddb

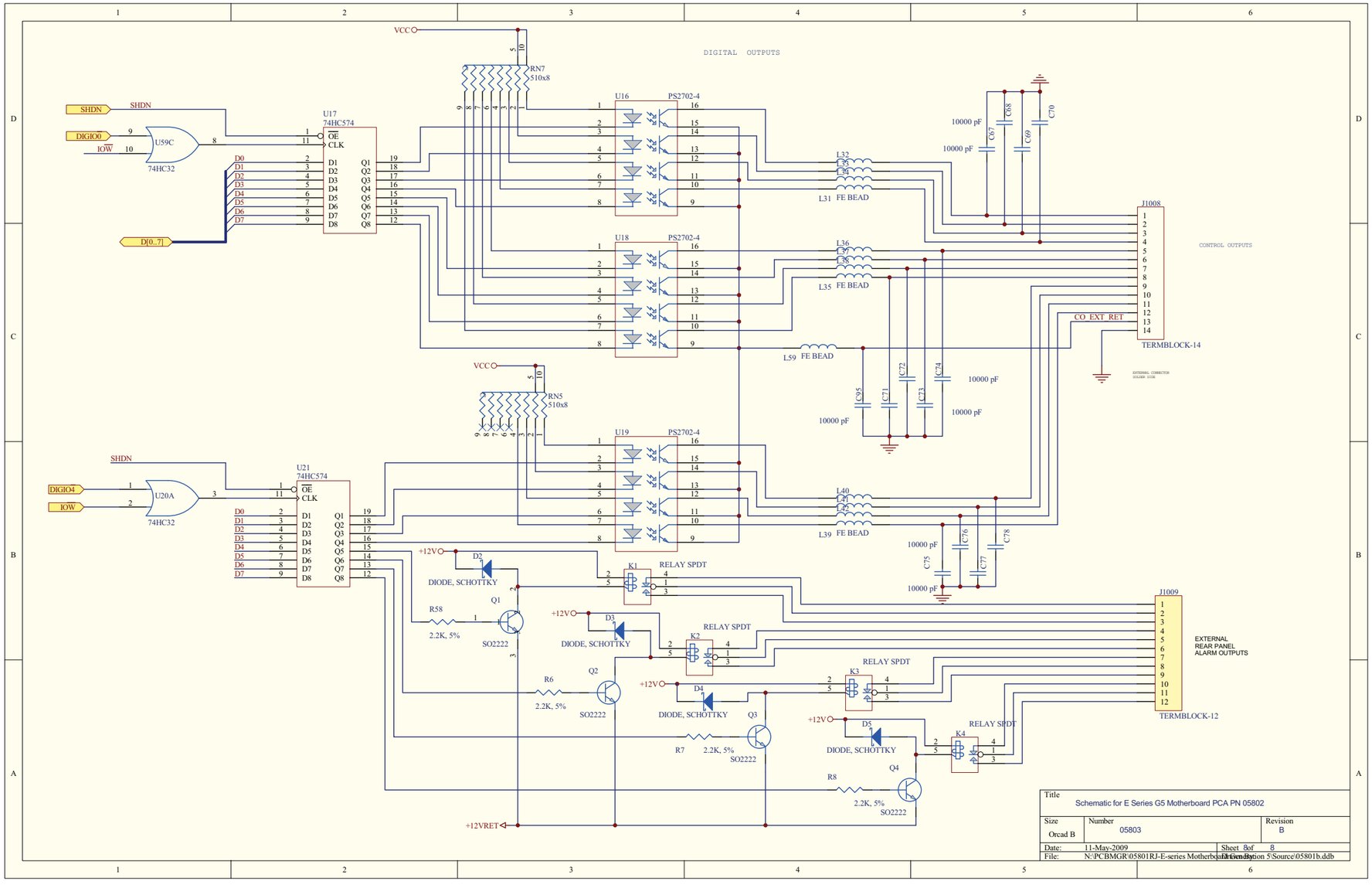
DIGITAL OUTPUTS
CONTROL OUTPUTS
EXTERNAL REAR PANEL ALARM OUTPUTS
SHDN
DIGIO0
IOW
U59C
74HC32
U17
74HC574
D[0..7]
RN7
510x8
U16
PS2702-4
U18
PS2702-4
U19
PS2702-4
RN5
510x8
U20A
74HC32
U21
74HC574
L32
L33
L34
L31 FE BEAD
L36
L37
L38
L35 FE BEAD
L59 FE BEAD
L40
L41
L42
L39 FE BEAD
10000 pF
C67
C68
C69
C70
C95
C71
C72
C73
C74
C75
C76
C77
C78
J1008
TERMBLOCK-14
CO_EXT_RET
J1009
TERMBLOCK-12
+12V
+12VRET
D2
DIODE, SCHOTTKY
Q1
SO2222
R58
2.2K, 5%
K1
RELAY SPDT
D3
DIODE, SCHOTTKY
K2
RELAY SPDT
R6
2.2K, 5%
Q2
SO2222
D4
DIODE, SCHOTTKY
K3
RELAY SPDT
R7
2.2K, 5%
Q3
SO2222
D5
DIODE, SCHOTTKY
K4
RELAY SPDT
R8
2.2K, 5%
Q4
SO2222
Title
Schematic for E Series G5 Motherboard PCA PN 05802
Size
Orcad B
Number
05803
Revision
B
Date: 11-May-2009
Sheet 8 of 8
File: N:\PCBMGR\05801RJ-E-series Motherboard Gen Revision 5\Source\05801b.ddb

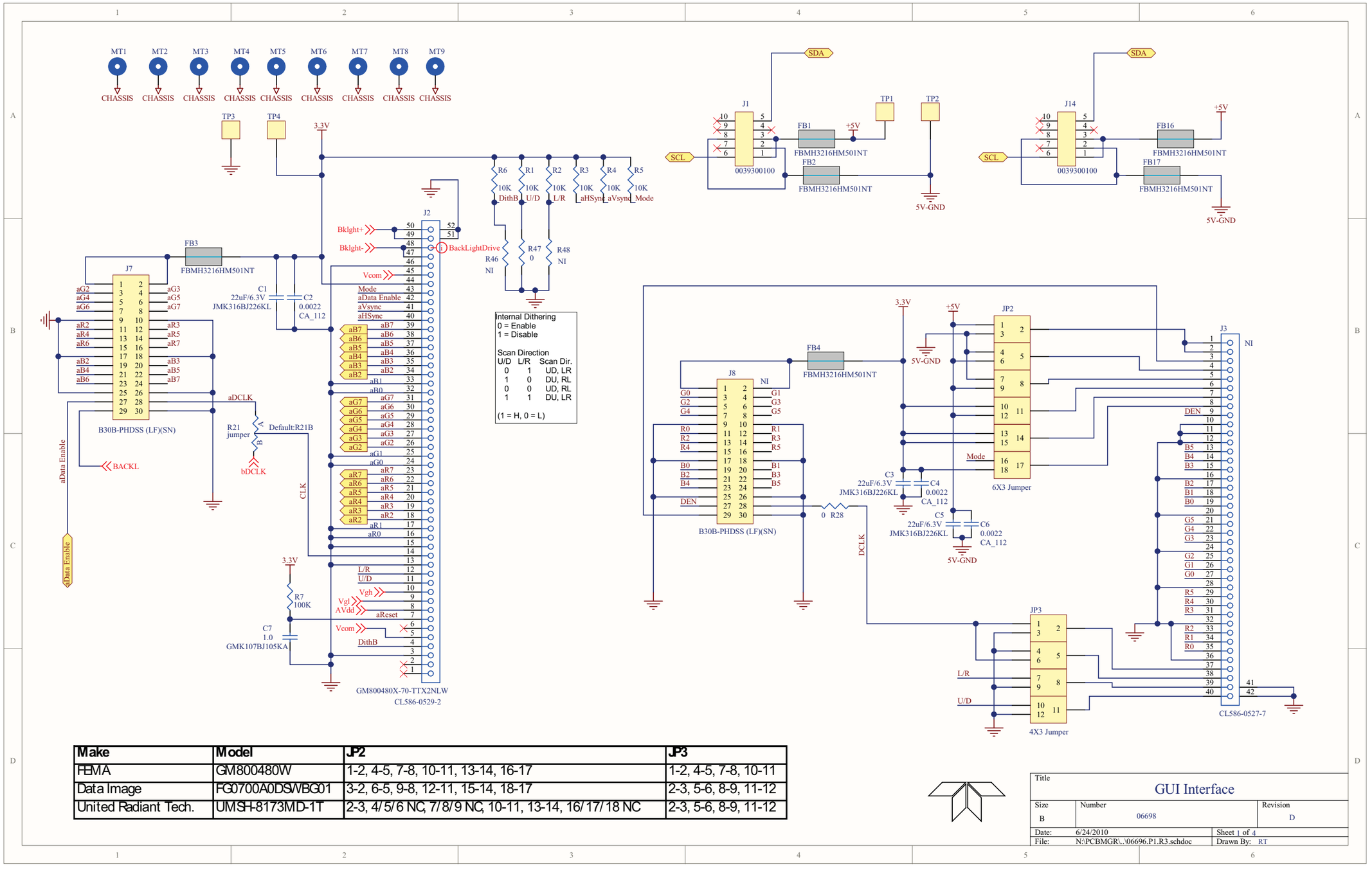


| Make | Model | JP2 | JP3 |
|---|---|---|---|
| FEMA | GM800480W | 1-2, 4-5, 7-8, 10-11, 13-14, 16-17 | 1-2, 4-5, 7-8, 10-11 |
| Data Image | FG0700A0DSWBG01 | 3-2, 6-5, 9-8, 12-11, 15-14, 18-17 | 2-3, 5-6, 8-9, 11-12 |
| United Radiant Tech. | UMSH-8173MD-1T | 2-3, 4/5/6 NC, 7/8/9 NC, 10-11, 13-14, 16/17/18 NC | 2-3, 5-6, 8-9, 11-12 |

| | | |
|---|---|---|
| Title | GUI Interface | |
| Size: B | Number: 06698 | Revision: D |
| Date: 6/24/2010 | Sheet 1 of 4 | |
| File: N:\PCBMGR\..\06696.P1.R3.schdoc | Drawn By: RT | |

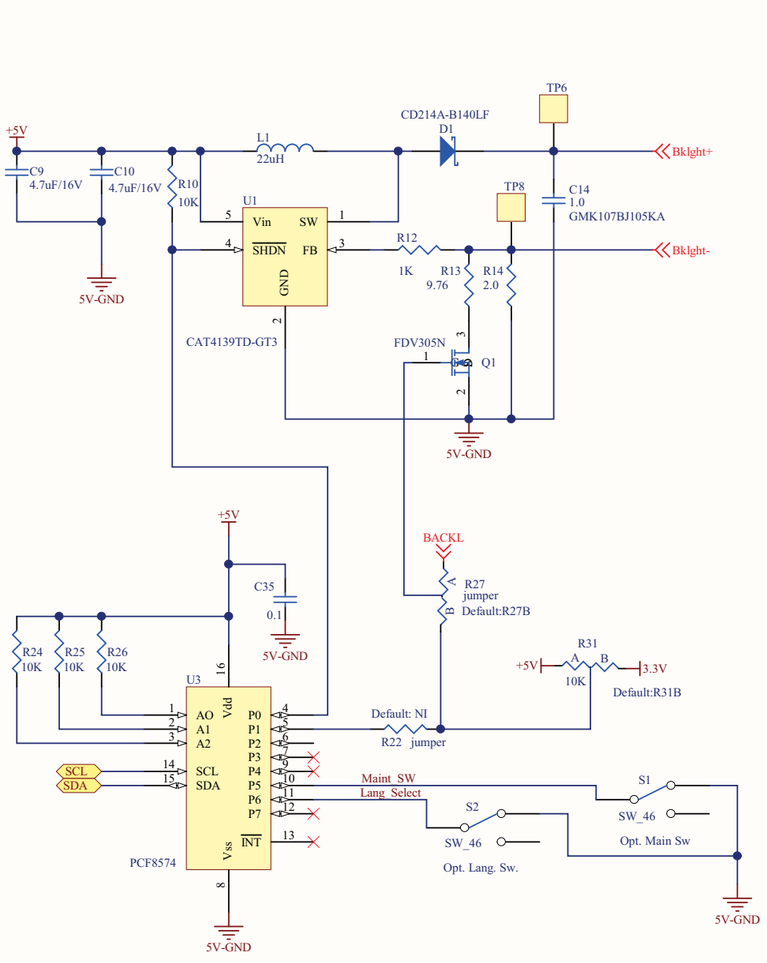


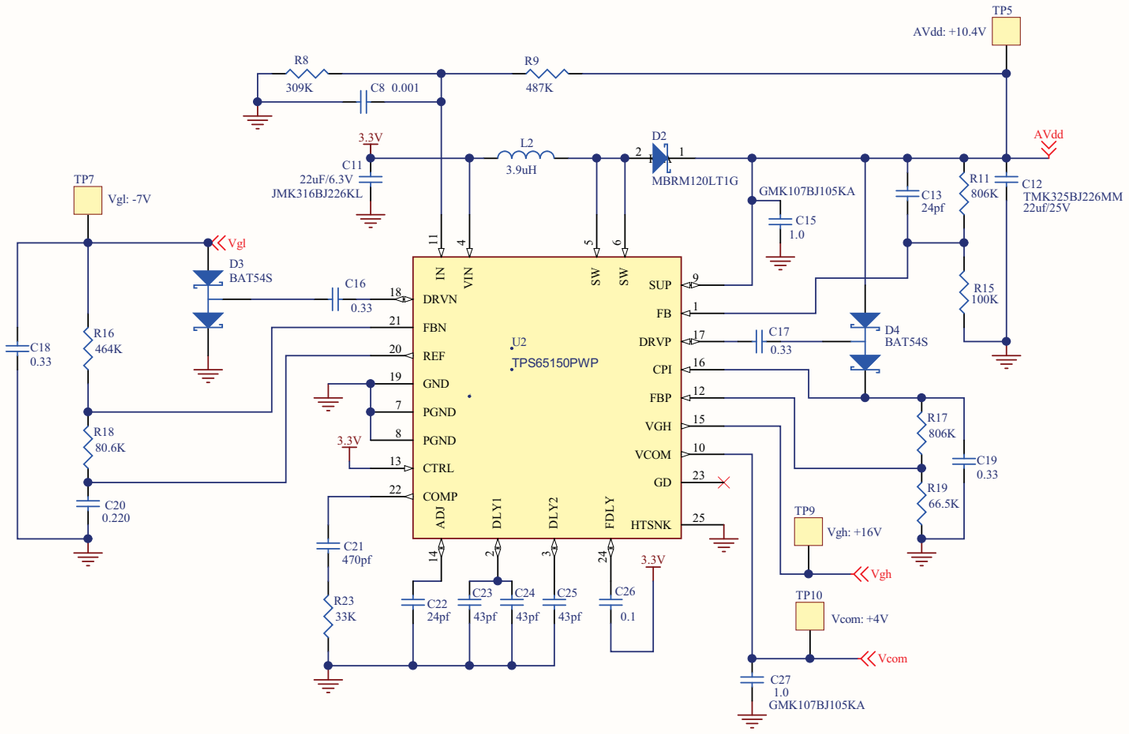


**Backlight Brightness Control**

| Control Mode | R22 | R27 | R31 |
|---|---|---|---|
| Remote – Video Port | NO | A | NO |
| Remote – I2C | YES | B | NO |
| Fixed Bright (default) | NO | B | B |

| | | | |
|---|---|---|---|
| Title | GUI Interface | | |
| Size: B | Number: 06698 | | Revision: D |
| Date: 6/24/2010 | | Sheet 2 of 4 | |
| File: N:\PCBMGR\..\06696.P2.R3.schdoc | | Drawn By: RT | |

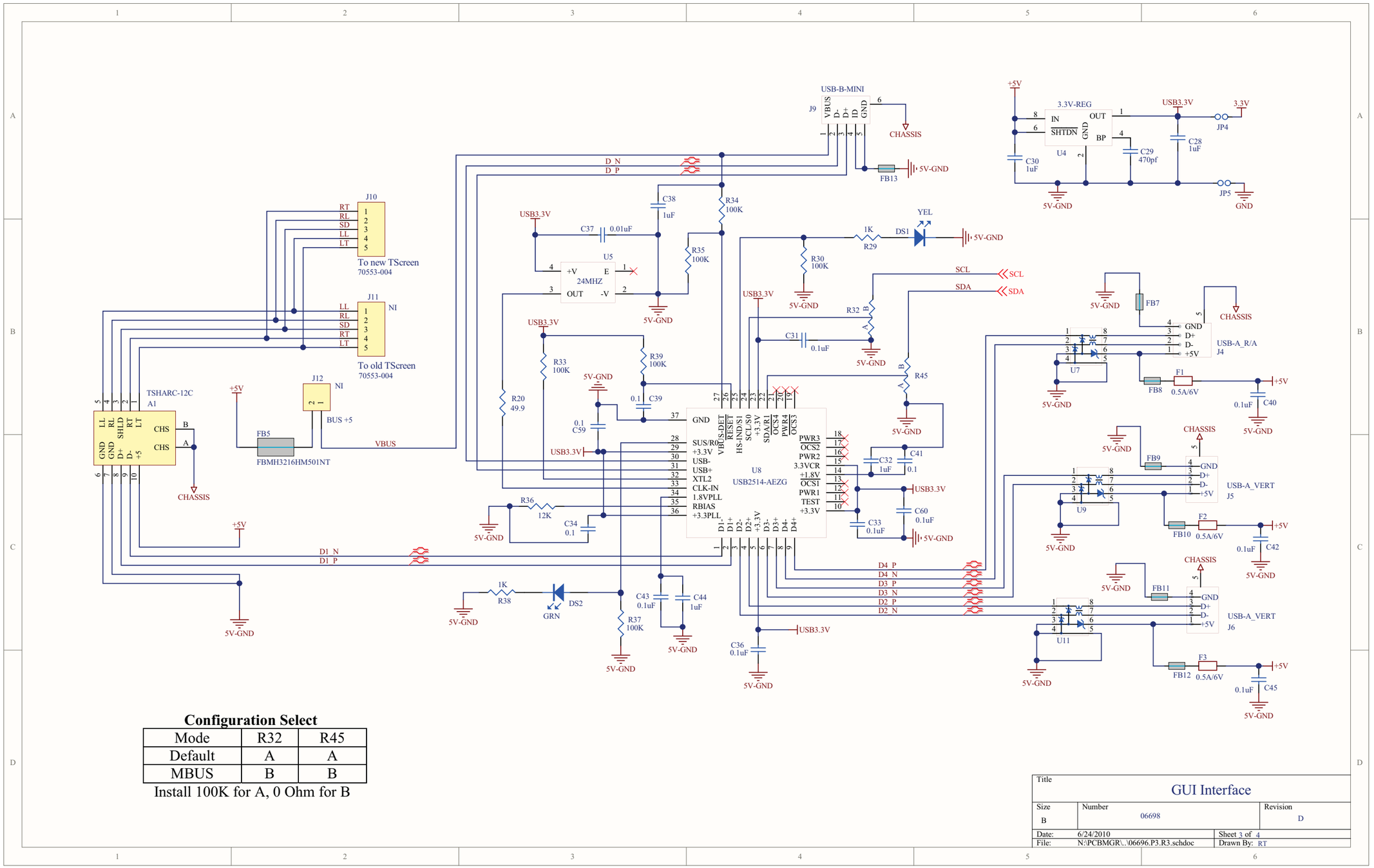


**Configuration Select**

| Mode | R32 | R45 |
|---|---|---|
| Default | A | A |
| MBUS | B | B |

Install 100K for A, 0 Ohm for B

| | | |
|---|---|---|
| Title: GUI Interface | | |
| Size: B | Number: 06698 | Revision: D |
| Date: 6/24/2010 | | Sheet 3 of 4 |
| File: N:\PCBMGR\..\06696.P3.R3.schdoc | | Drawn By: RT |

# TOUCH SCREEN INTERFACE CIRCUITRY ( TBD)

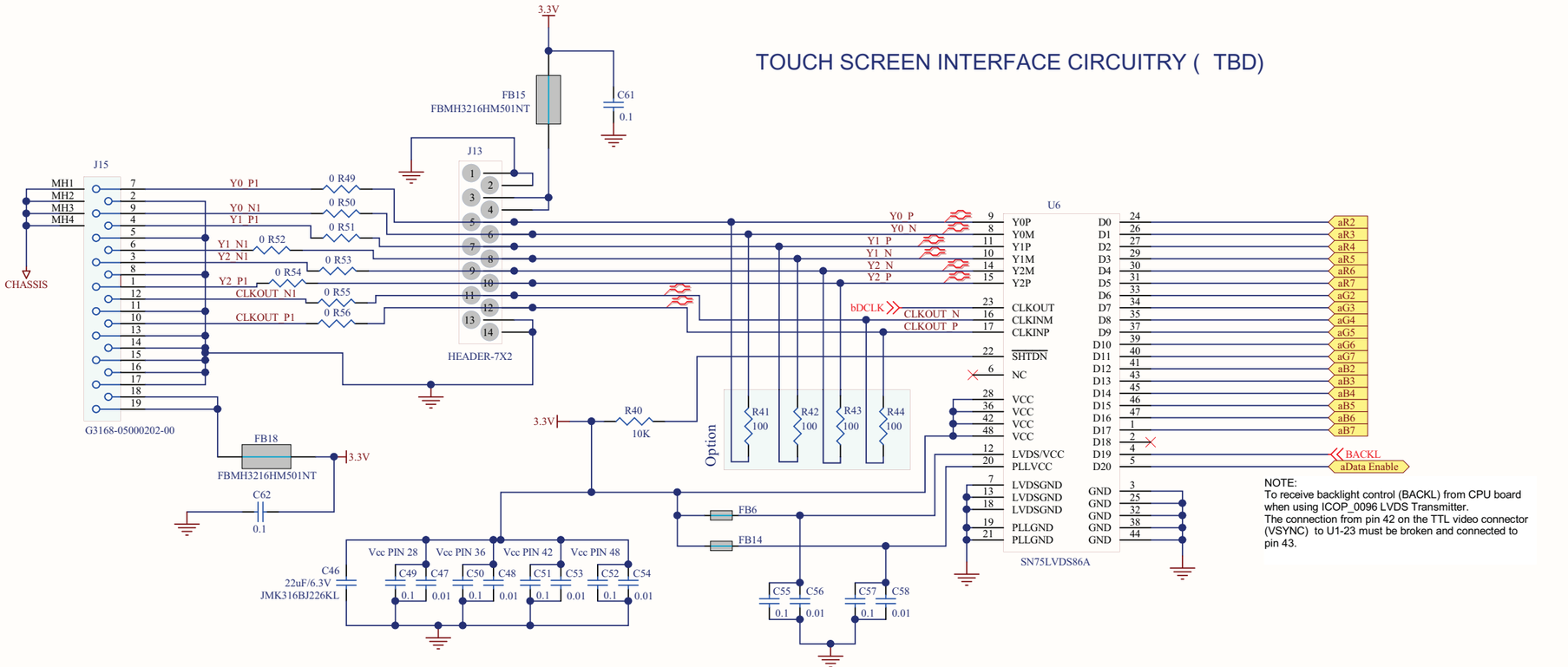


| | | |
|---|---|---|
| Title | GUI Interface | |
| Size: B | Number: 06698 | Revision: D |
| Date: 6/24/2010 | | Sheet 4 of 4 |
| File: N:\PCBMGR\..\06696.P4.R3.schdoc | | Drawn By: RT |

## From ICOP CPU

## To LCD Display

MT1 MT2

CHASSIS-0 CHASSIS

+3.3V

J2 Header 22X2

| | | | |
|---|---|---|---|
| | 1 | 2 | |
| VAD0 | 3 | 4 | VAD1 |
| VAD2 | 5 | 6 | VAD3 |
| VAD6 | 7 | 8 | VAD7 |
| VAD8 | 9 | 10 | VAD9 |
| VAD10 | 11 | 12 | VAD11 |
| | 13 | 14 | |
| | 15 | 16 | |
| | 17 | 18 | |
| | 19 | 20 | |
| VBD2 | 21 | 22 | VBD3 |
| VBD4 | 23 | 24 | VBD5 |
| VBD6 | 25 | 26 | VBD7 |
| VBD10 | 27 | 28 | VBD11 |
| | 29 | 30 | |
| | 31 | 32 | VBGCLK |
| | 33 | 34 | VBDE |
| | 35 | 36 | |
| | 37 | 38 | |
| | 39 | 40 | |
| | 41 | 42 | |
| | 43 | 44 | |

U1

| | | | | | |
|---|---|---|---|---|---|
| VAD6 | 44 | D0 | Y0M | 41 | Y0_N |
| VAD7 | 45 | D1 | Y0P | 40 | Y0_P |
| VAD8 | 47 | D2 | Y1M | 39 | Y1_N |
| VAD9 | 48 | D3 | Y1P | 38 | Y1_P |
| VAD10 | 1 | D4 | Y2M | 35 | Y2_N |
| VAD11 | 3 | D5 | Y2P | 34 | Y2_P |
| VBD10 | 4 | D6 | CLKIN | 26 | CLKIN |
| VBD11 | 6 | D7 | CLKOUTM | 33 | CLKOUT_N |
| VAD0 | 7 | D8 | CLKOUTP | 32 | CLKOUT_P |
| VAD1 | 9 | D9 | | | |
| VAD2 | 10 | D10 | SHTDN | 27 | +3.3V |
| VAD3 | 12 | D11 | NC | 14 | |
| VBD2 | 13 | D12 | NC | 43 | |
| VBD3 | 15 | D13 | VCC | 2 | |
| VBD4 | 16 | D14 | VCC | 8 | |
| VBD5 | 18 | D15 | VCC | 21 | |
| VBD6 | 19 | D16 | LVDSVCC | 37 | |
| VBD7 | 20 | D17 | PLLVCC | 29 | |
| | 22 | D18 | | | |
| BACKL | 23 | D19 | VLDSGND | 42 | |
| VBDE | 25 | D20 | VLDSGND | 36 | |
| | 5 | GND | VLDSGND | 31 | |
| | 11 | GND | | | |
| | 17 | GND | PLLGND | 30 | |
| | 24 | GND | PLLGND | 28 | |
| | 46 | GND | | | |

SN75LVDS84A

22.1 R2

R1 10K

BACKL

J1

| | | | |
|---|---|---|---|
| Y2_P | 1 | MH1 | |
| | 2 | MH2 | |
| Y2_N | 3 | MH3 | |
| Y1_P | 4 | MH4 | |
| | 5 | | |
| Y1_N | 6 | | |
| Y0_P | 7 | | |
| | 8 | | |
| Y0_N | 9 | | |
| CLKOUT_P | 10 | | |
| | 11 | | |
| CLKOUT_N | 12 | | |
| | 13 | | |
| | 14 | | |
| | 15 | | |
| | 16 | | |
| | 17 | | |
| | 18 | | |
| | 19 | | |

CHASSIS

+3.3V

G3168-05000101-00

+3.3V

J3

| | | | |
|---|---|---|---|
| | 1 | 2 | |
| Y0_P | 3 | 4 | Y0_N |
| Y1_P | 5 | 6 | Y1_N |
| Y2_N | 7 | 8 | Y2_P |
| CLKOUT_N | 9 | 10 | CLKOUT_P |
| | 11 | 12 | |
| | 13 | 14 | |

Header 7X2

+3.3V

| | | | | | | | | | | |
|---|---|---|---|---|---|---|---|---|---|---|
| C1 | C2 | C3 | C4 | C5 | C6 | C7 | C8 | C9 | C10 | C11 |
| 22uF/6.3V | 0.1 | 0.01 | 0.1 | 0.01 | 0.1 | 0.01 | 0.1 | 0.01 | 0.1 | 0.01 |
| JMK316BJ226KL | | | | | | | | | | |

| | | | |
|---|---|---|---|
| Title | LVDS, Transmitter Board | | |
| Size: A | Number: 06882 | Revision: B | |
| Date: 5/7/2010 | | Sheet 1 of 1 | |
| File: N:\PCBMGR\..\06882-P1-R0.SchDoc | | Drawn By: RT | |

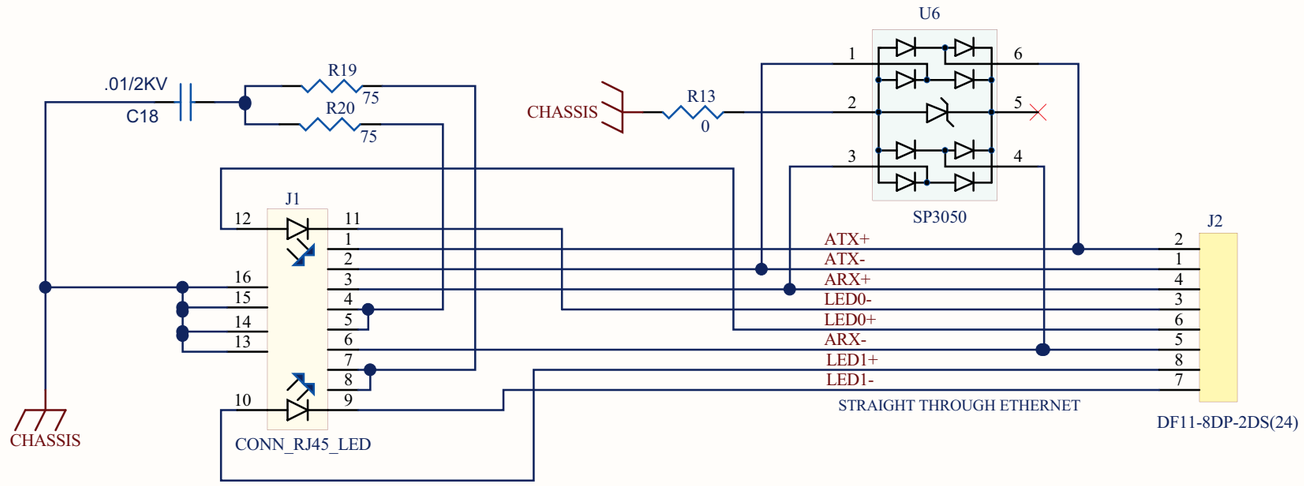


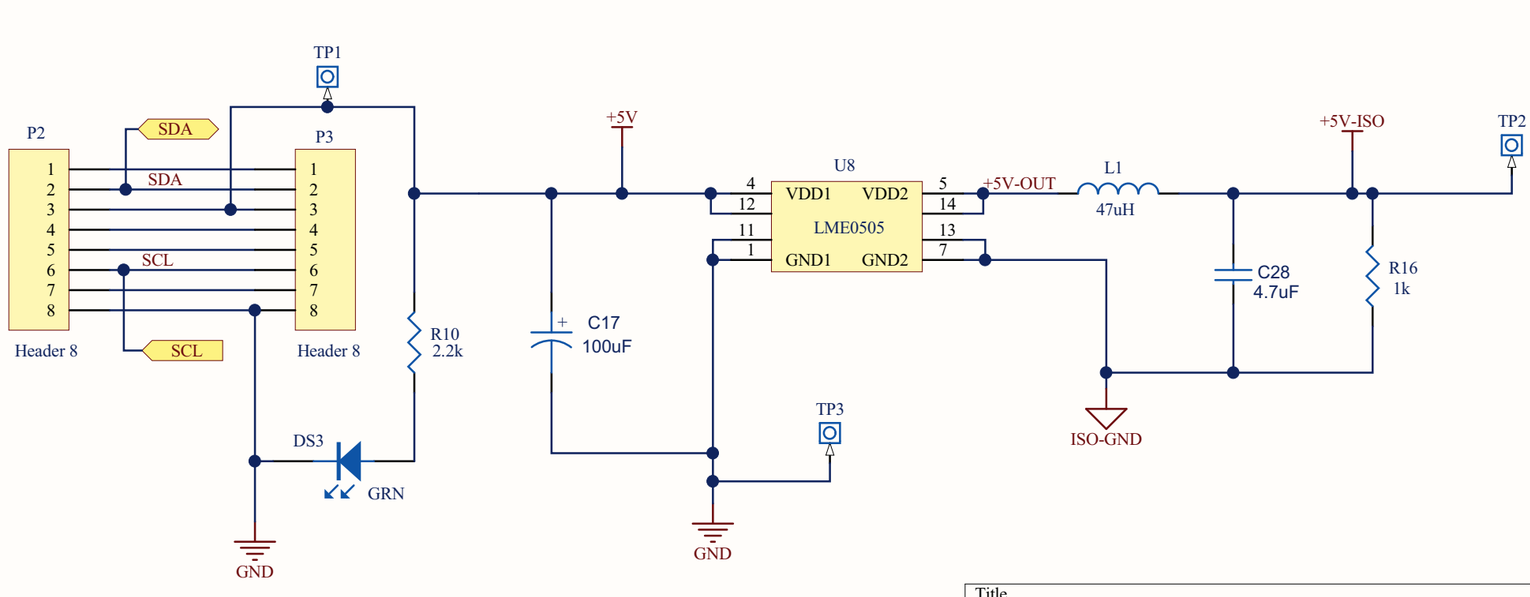


DCN:6092

PRINTED DOCUMENTS ARE UNCONTROLLED

| | | |
|---|---|---|
| Title | Auxiliary I/O Board (PWR-ETHERNET) | |
| Size: A | Number: 06731 | Revision: B |
| Date: 5/6/2011 | | Sheet 1 of 3 |
| File: N:\PCBMGR\..\06731-1_ETHERNET.SchDoc | | Drawn By: RT |

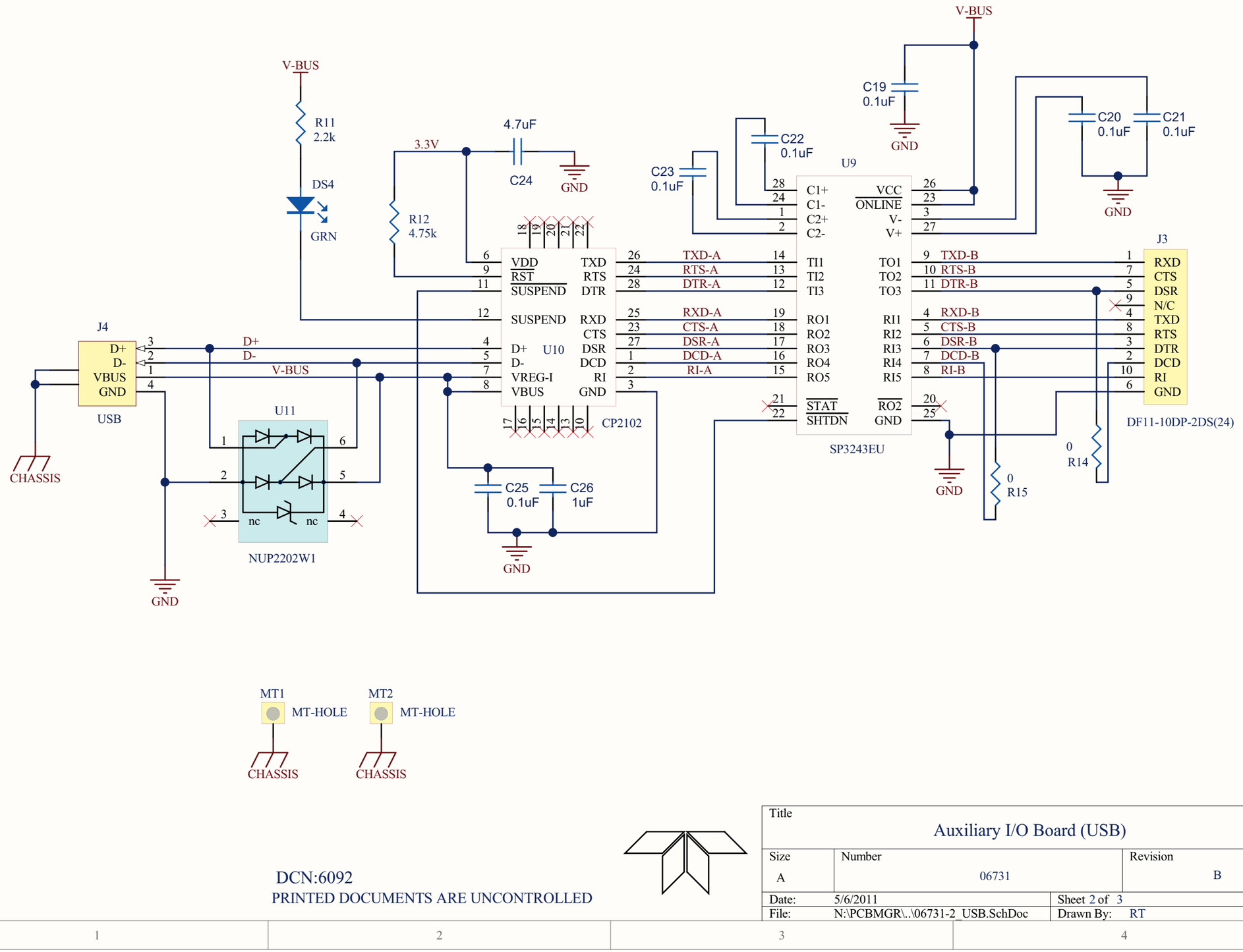


MT1 MT-HOLE CHASSIS

MT2 MT-HOLE CHASSIS

DCN:6092

PRINTED DOCUMENTS ARE UNCONTROLLED

| Title | | |
|---|---|---|
| Auxiliary I/O Board (USB) | | |
| Size: A | Number: 06731 | Revision: B |
| Date: 5/6/2011 | | Sheet 2 of 3 |
| File: N:\PCBMGR\..\06731-2_USB.SchDoc | | Drawn By: RT |

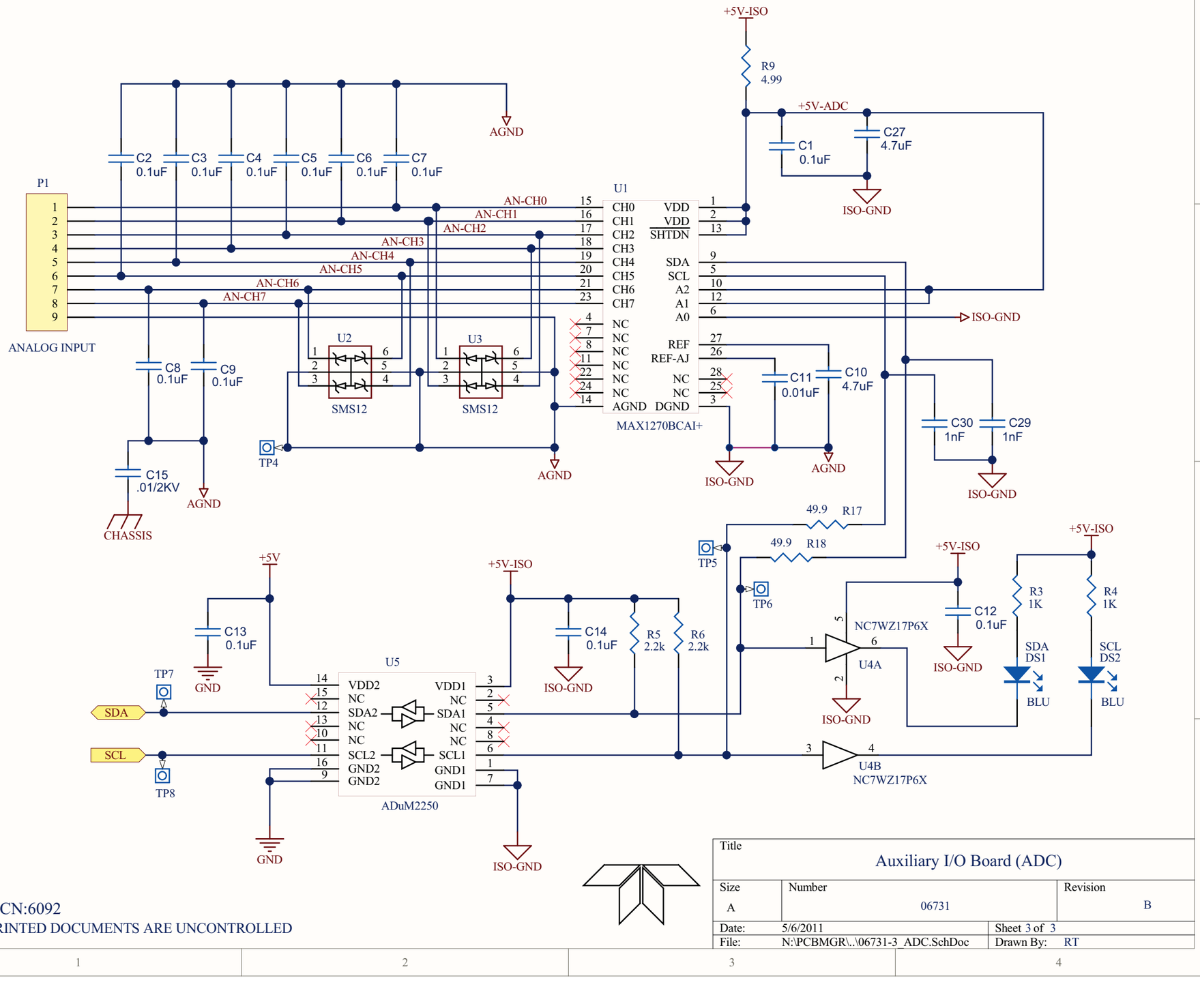
+5V-ISO
R9
4.99
+5V-ADC
C1
0.1uF
C27
4.7uF
ISO-GND
AGND
C2
0.1uF
C3
0.1uF
C4
0.1uF
C5
0.1uF
C6
0.1uF
C7
0.1uF
P1
ANALOG INPUT
AN-CH0
AN-CH1
AN-CH2
AN-CH3
AN-CH4
AN-CH5
AN-CH6
AN-CH7
U1
CH0
CH1
CH2
CH3
CH4
CH5
CH6
CH7
VDD
VDD
SHTDN
SDA
SCL
A2
A1
A0
NC
REF
REF-AJ
DGND
MAX1270BCAI+
U2
SMS12
U3
SMS12
C8
0.1uF
C9
0.1uF
C15
.01/2KV
CHASSIS
TP4
C11
0.01uF
C10
4.7uF
C30
1nF
C29
1nF
49.9
R17
49.9
R18
TP5
TP6
+5V
+5V-ISO
C13
0.1uF
C14
0.1uF
R5
2.2k
R6
2.2k
U5
VDD2
NC
SDA2
NC
NC
SCL2
GND2
GND2
VDD1
NC
SDA1
NC
NC
SCL1
GND1
GND1
ADuM2250
TP7
TP8
SDA
SCL
GND
NC7WZ17P6X
U4A
U4B
C12
0.1uF
R3
1K
R4
1K
SDA
DS1
SCL
DS2
BLU
DCN:6092
PRINTED DOCUMENTS ARE UNCONTROLLED
Title
Auxiliary I/O Board (ADC)
Size
A
Number
06731
Revision
B
Date:
5/6/2011
Sheet 3 of 3
File:
N:\PCBMGR\..\06731-3_ADC.SchDoc
Drawn By:
RT